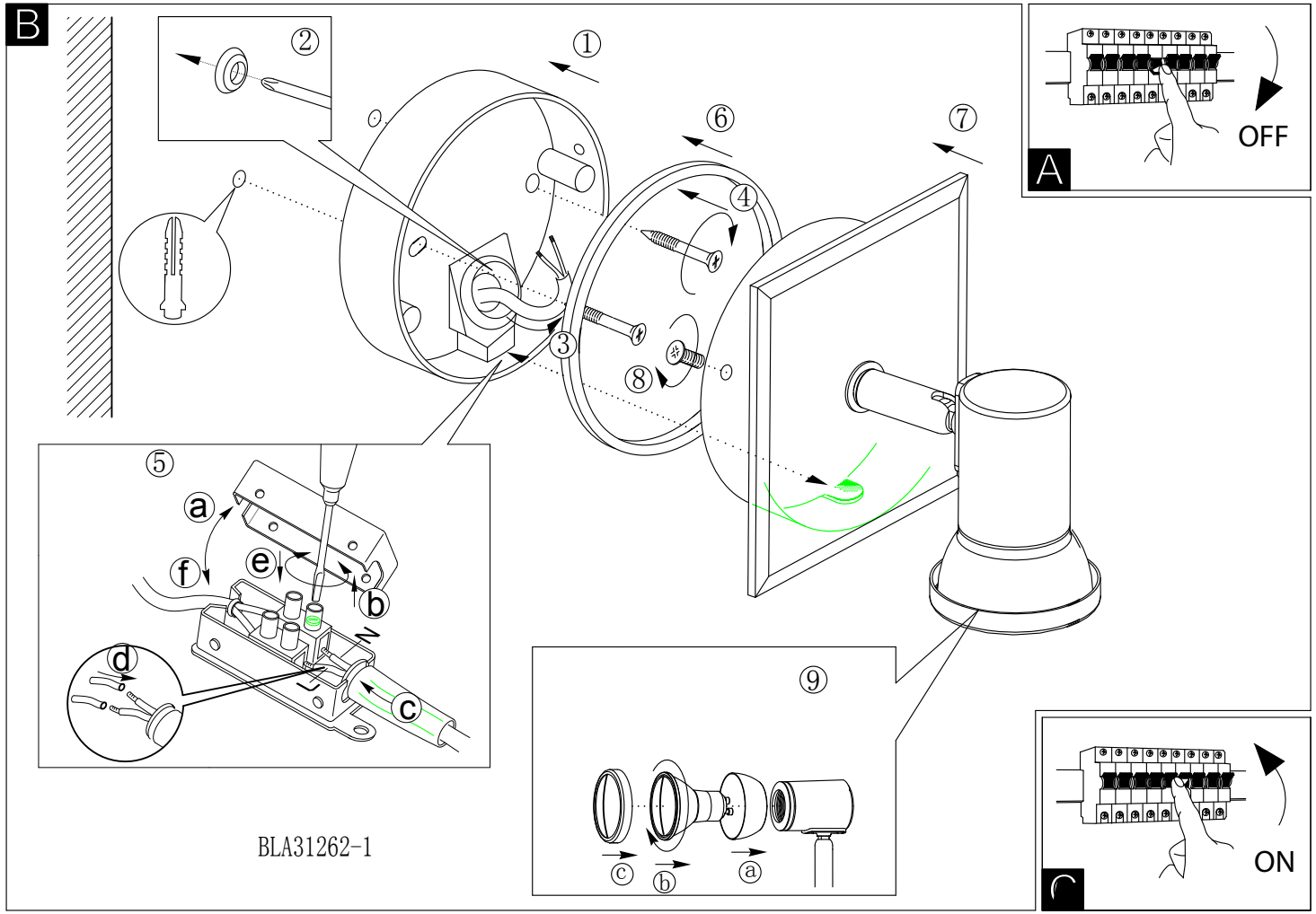
B
①
②
③
④
⑥
⑦
⑧
⑤
a
b
c
d
e
f
N
L
⑨
ⓒ
ⓑ
ⓐ
BLA31262-1
A
OFF
ON