UniFi® 6 Lite

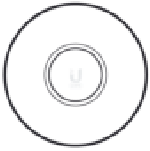

a

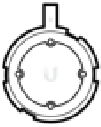

b

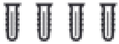

c

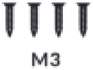

d

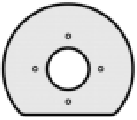

e

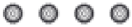

f

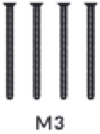

g

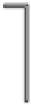

h

1

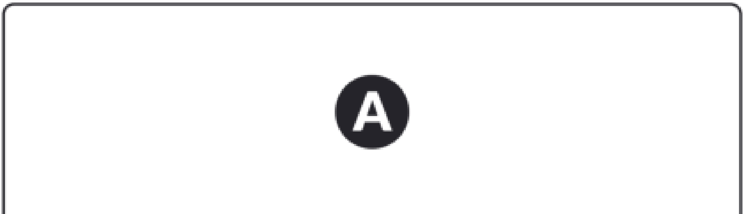

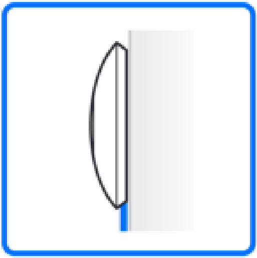

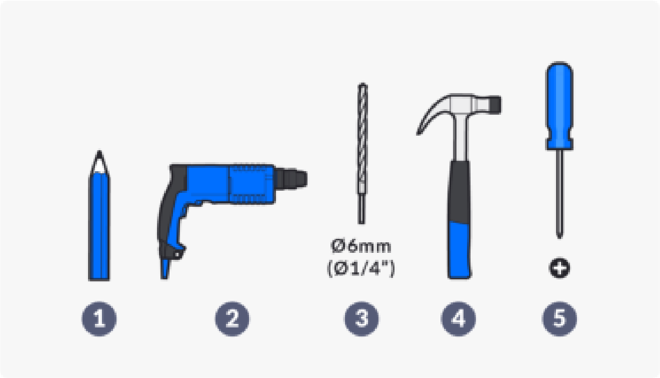
Ø6mm
(Ø1/4")
1
2
3
4
5

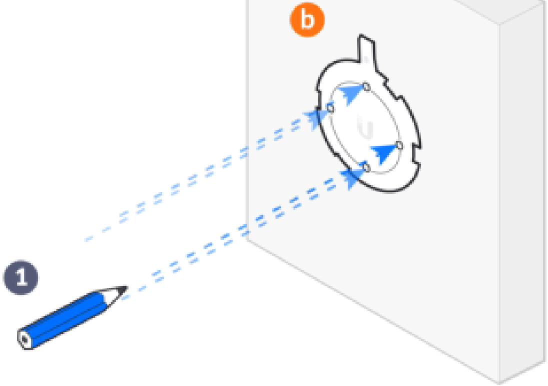

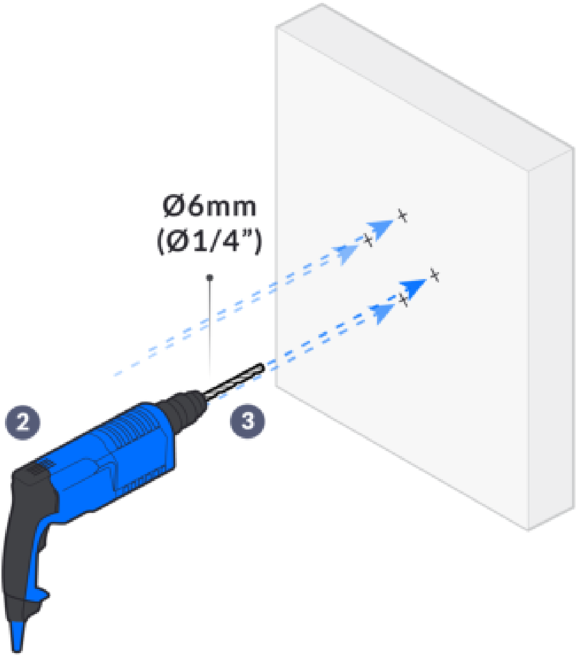

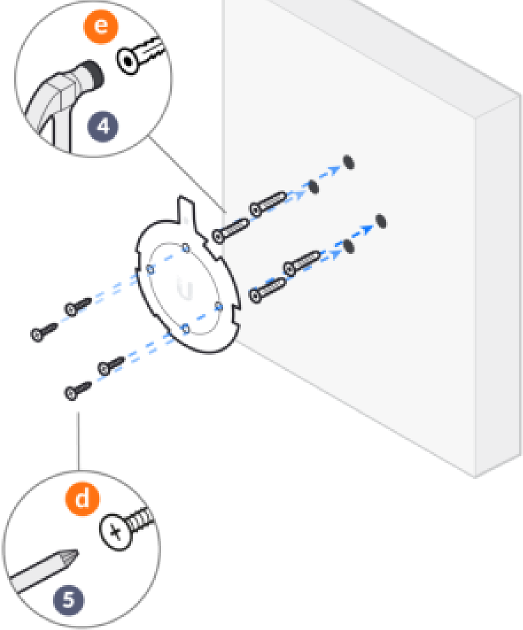

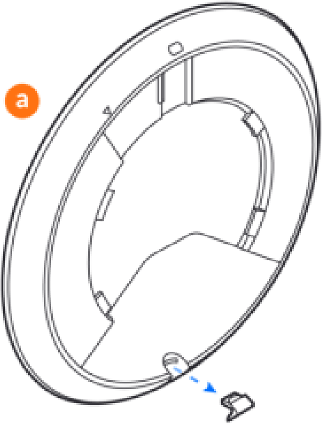

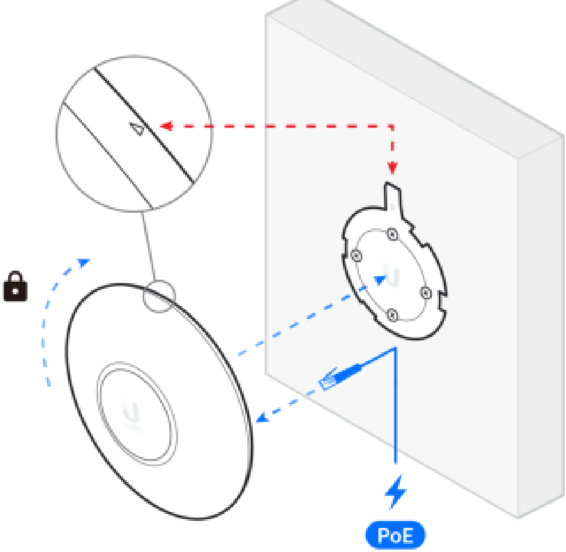

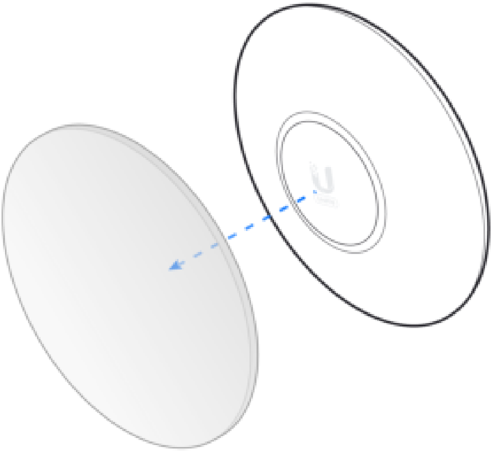

B

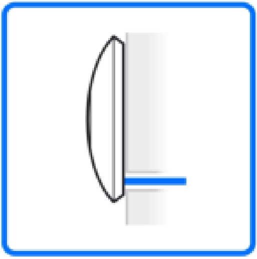

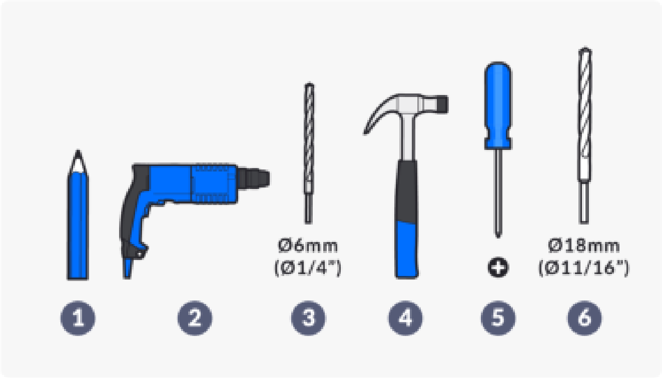
Ø6mm
(Ø1/4")
Ø18mm
(Ø11/16")
1
2
3
4
5
6

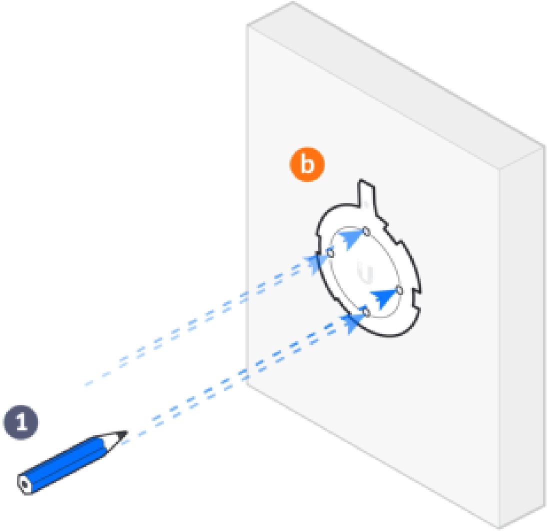

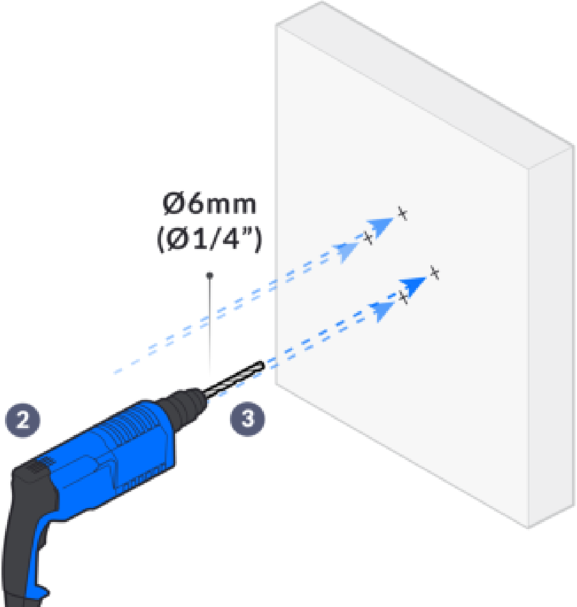

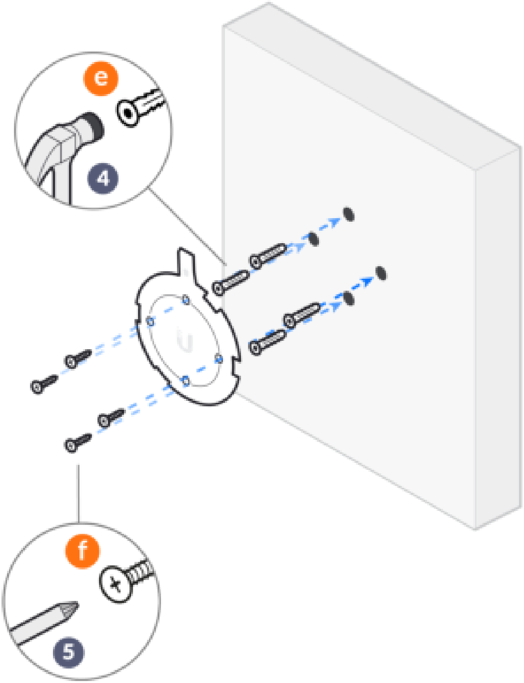

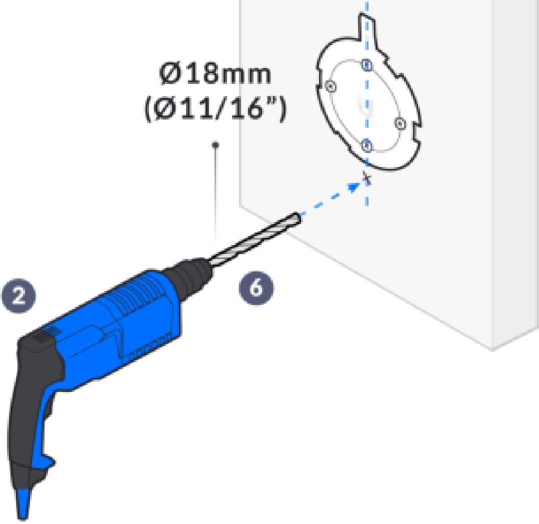
Ø18mm
(Ø11/16")
2
6

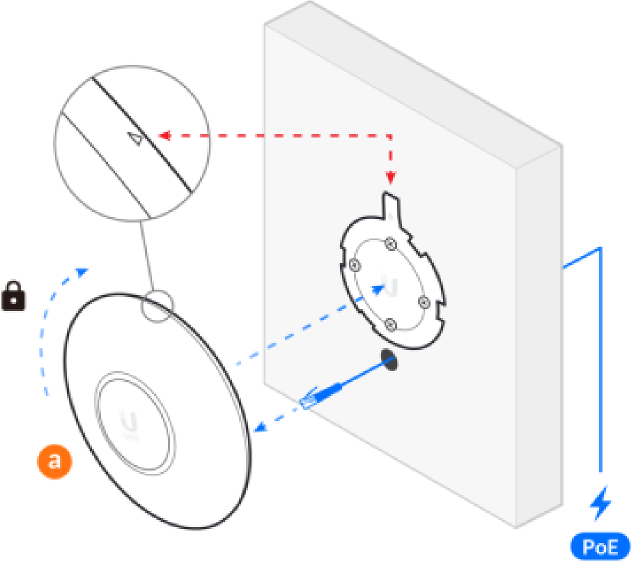

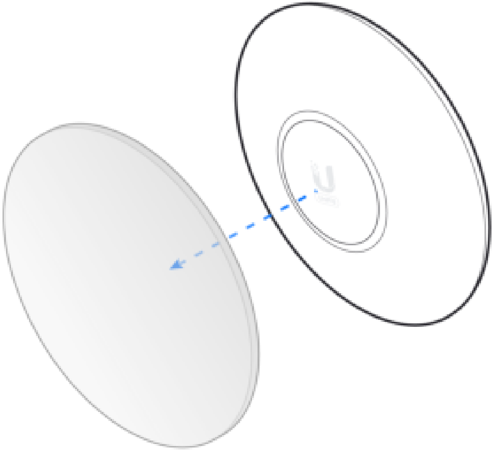

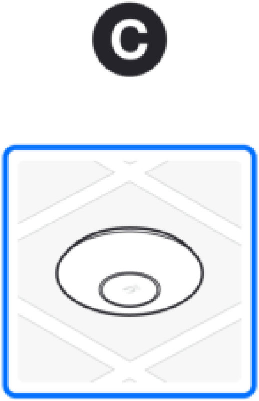

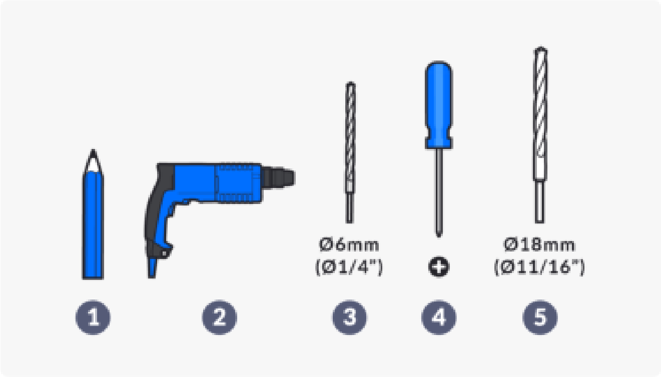
Ø6mm
(Ø1/4")
Ø18mm
(Ø11/16")
1
2
3
4
5

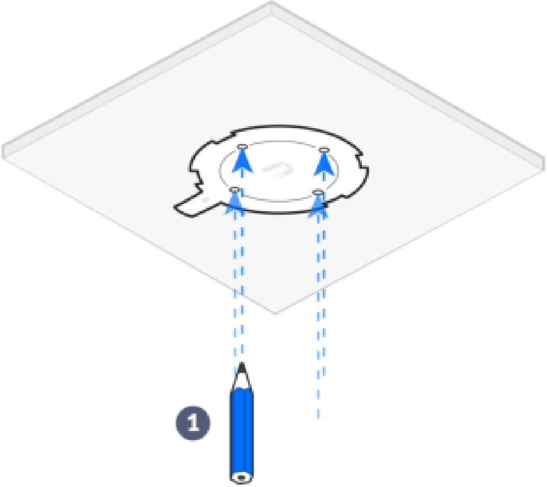

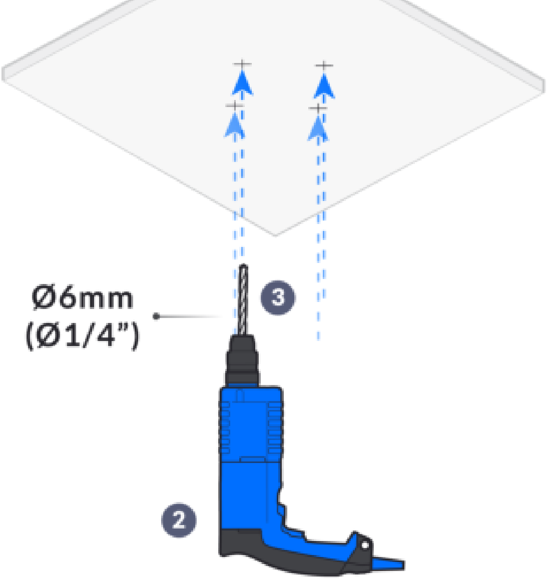

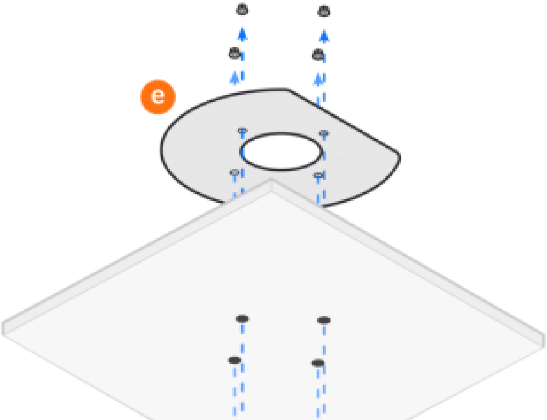

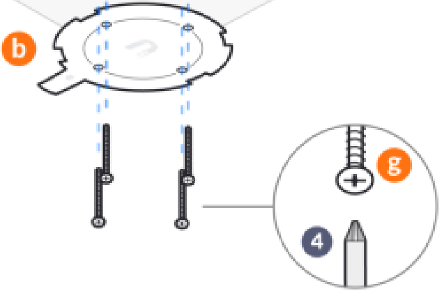

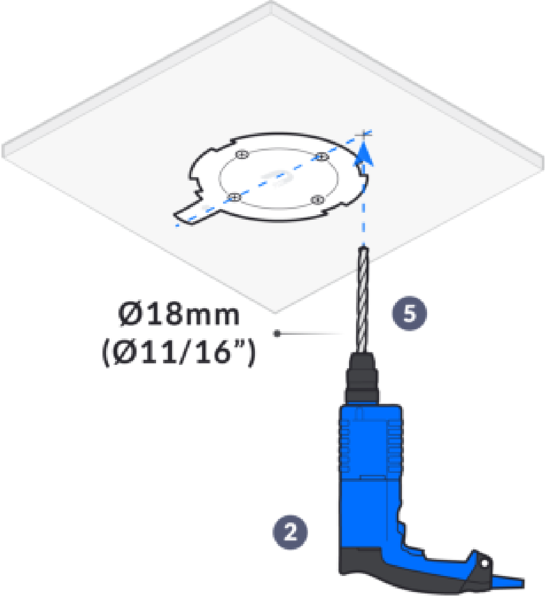
Ø18mm
(Ø11/16")
5
2

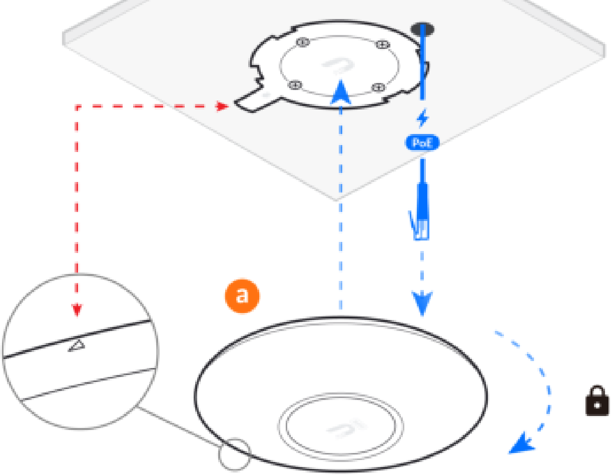

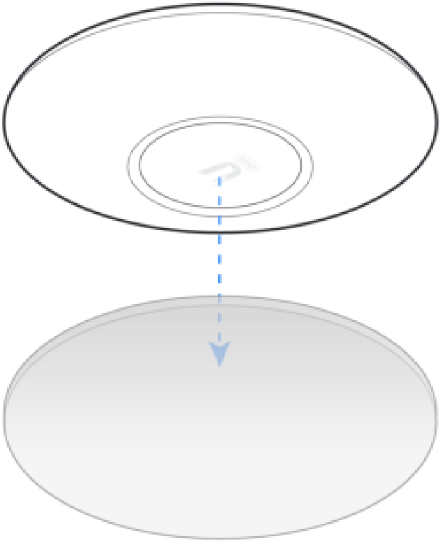

2

A

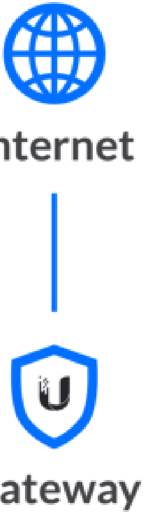

Internet

Gateway

B

Wi-Fi

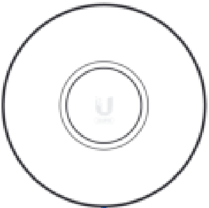

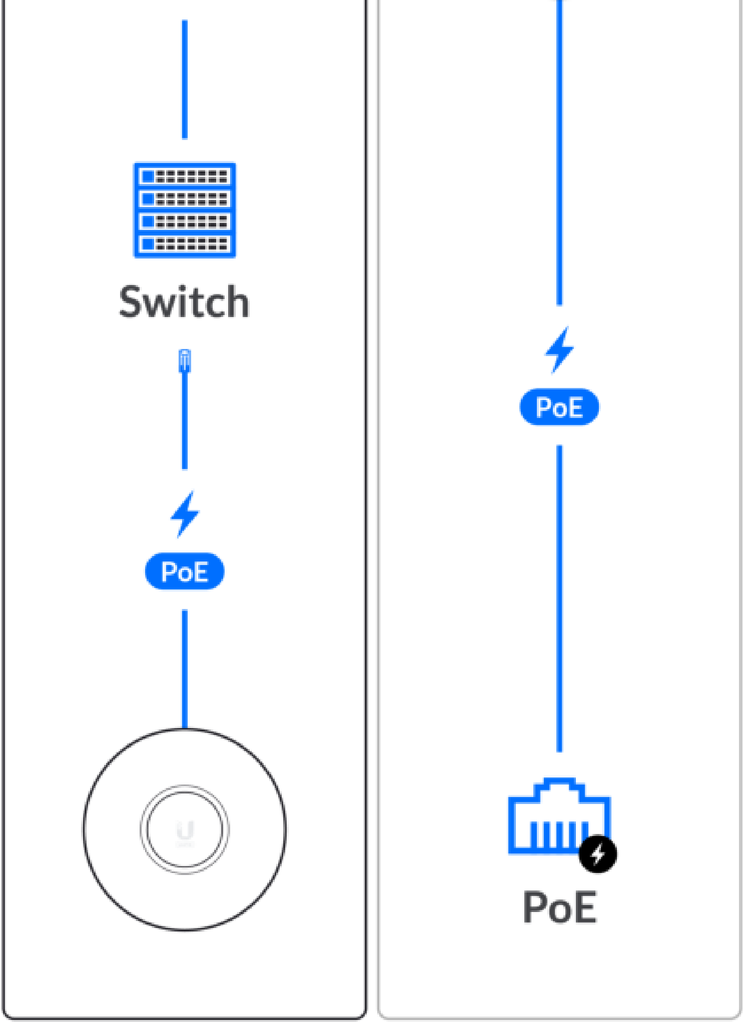
Switch
PoE
PoE
PoE

3

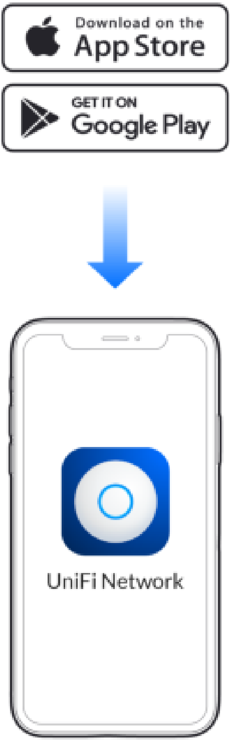
Download on the
App Store
GET IT ON
Google Play
UniFi Network

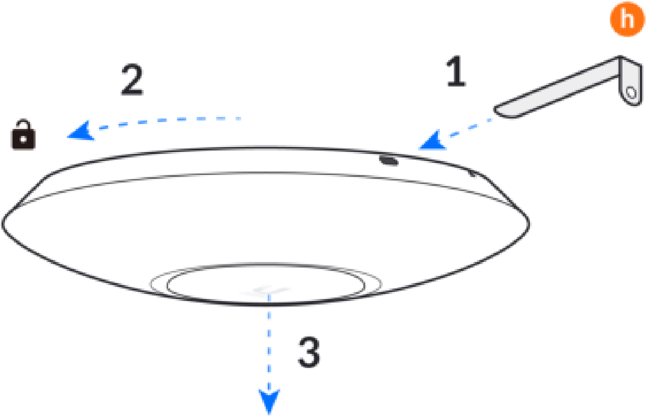

UniFi Network

Get Answers
help.ui.com

UI Support