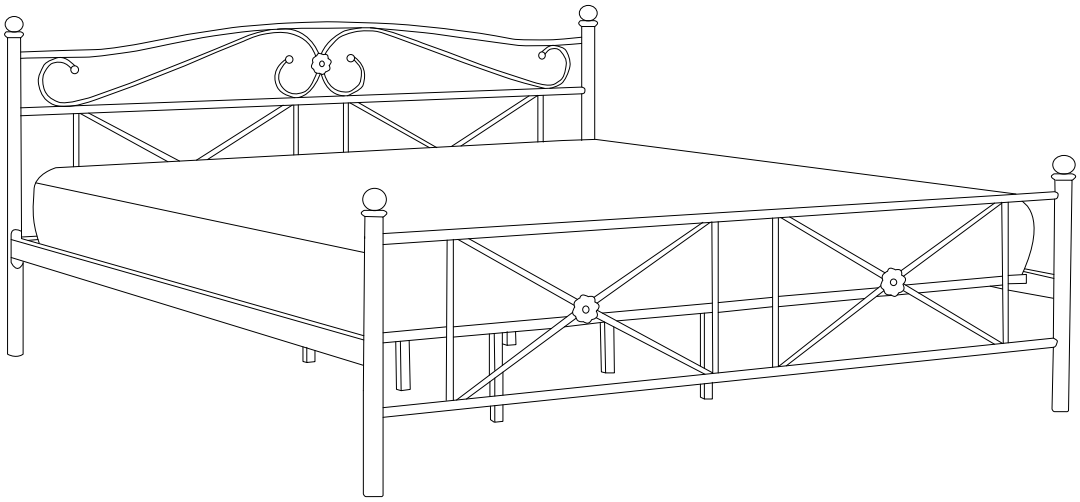

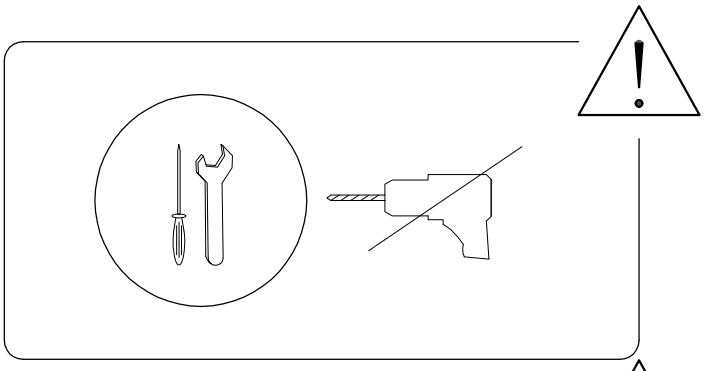

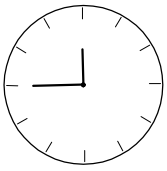

45'

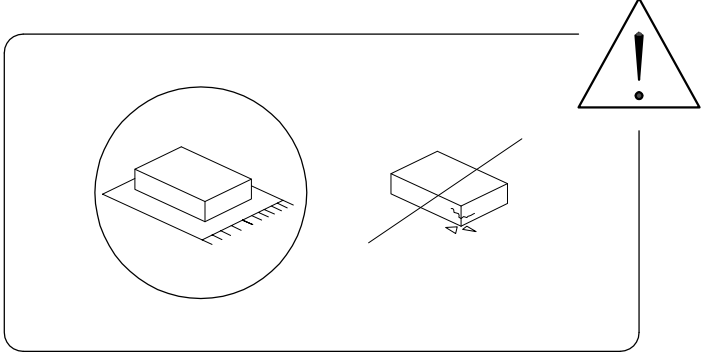

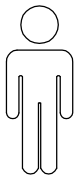

2

1016/BED.180.RODEZ/170719/

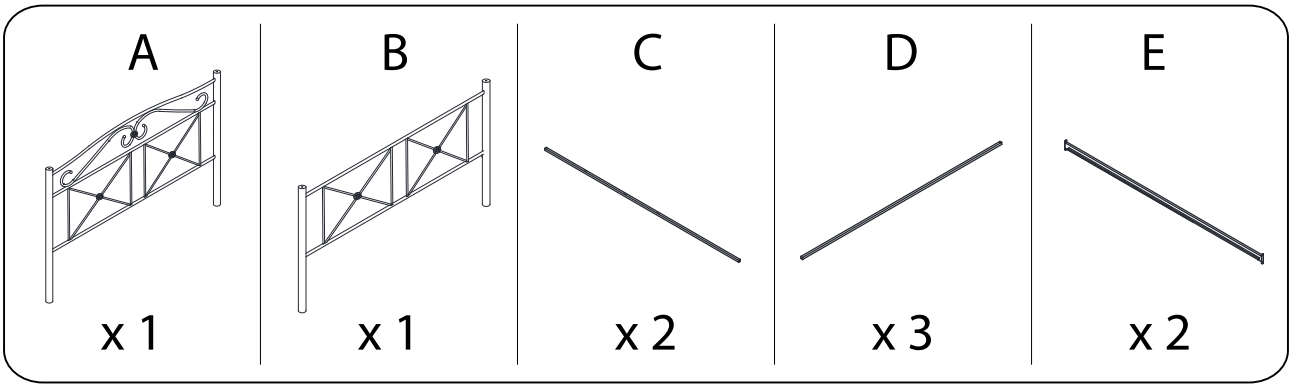
A
x 1
B
x 1
C
x 2
D
x 3
E
x 2

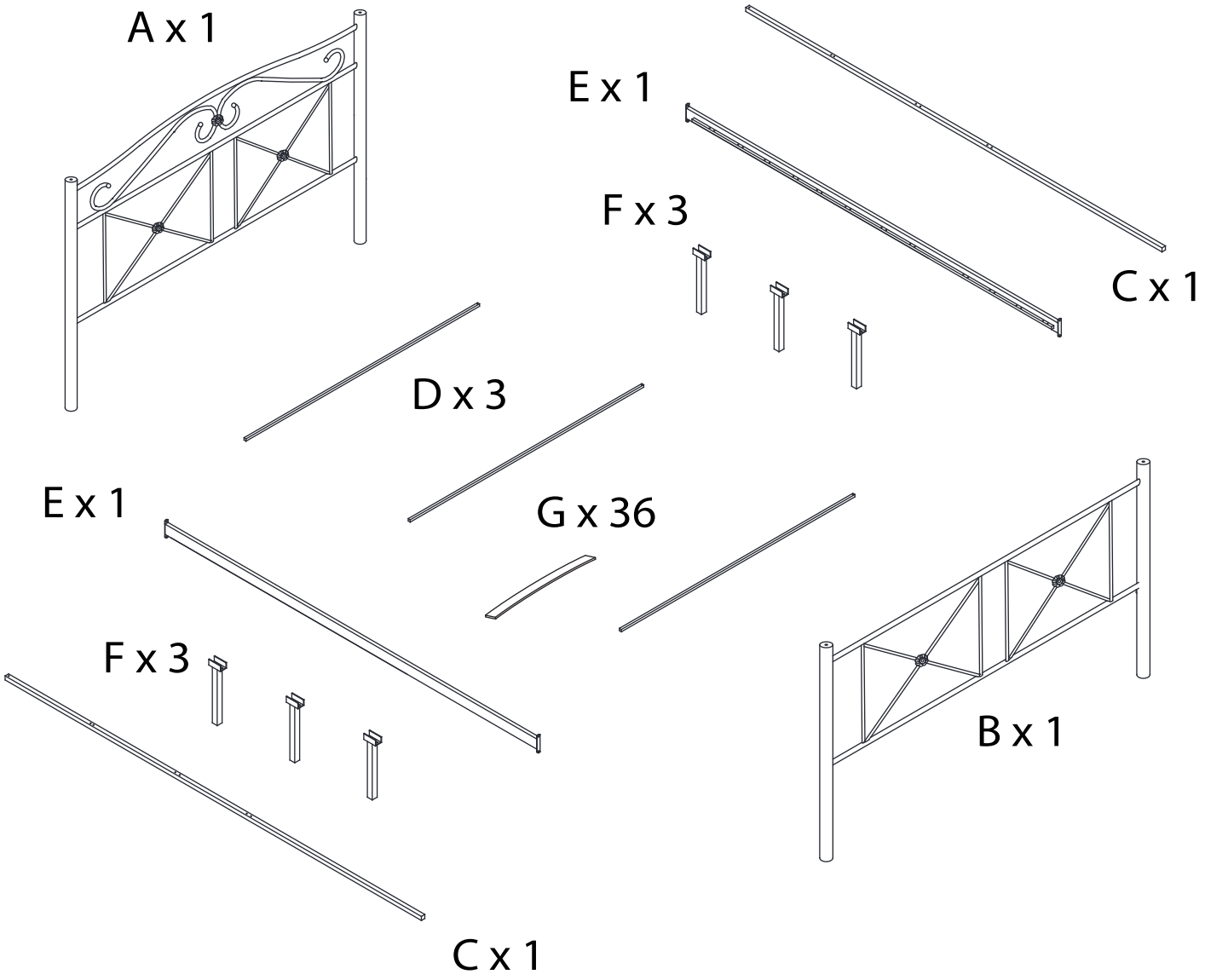
A x 1
E x 1
F x 3
C x 1
D x 3
E x 1
G x 36
F x 3
B x 1
C x 1

F	G
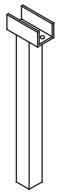	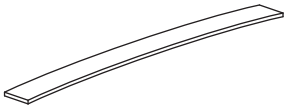
x 6	x 36

H	I	J
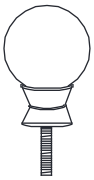	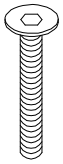 M6 x 55	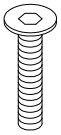 M6 x 45
x 4	x 6	x 6

K	L	M
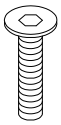 M6 x 35	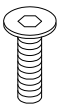 M6 x 20	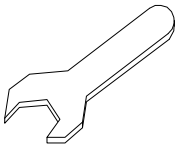
x 10	x 8	x 1

N	O	P
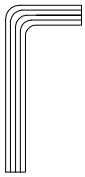	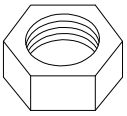	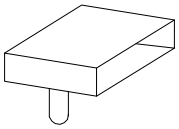
x 1	x 22	x 24

Q	R	S
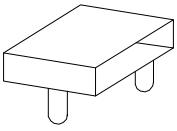	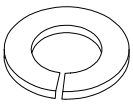	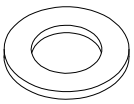
x 24	x 8	x 24

1

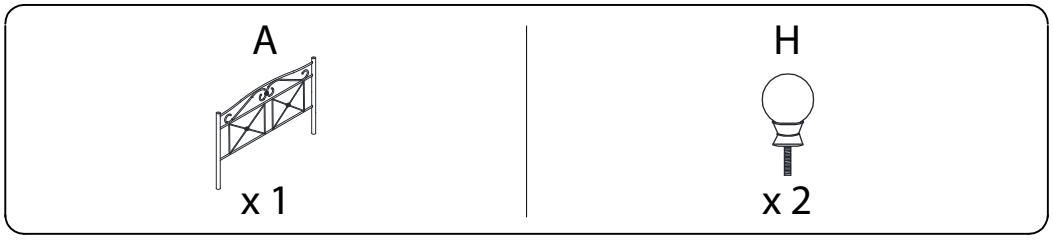

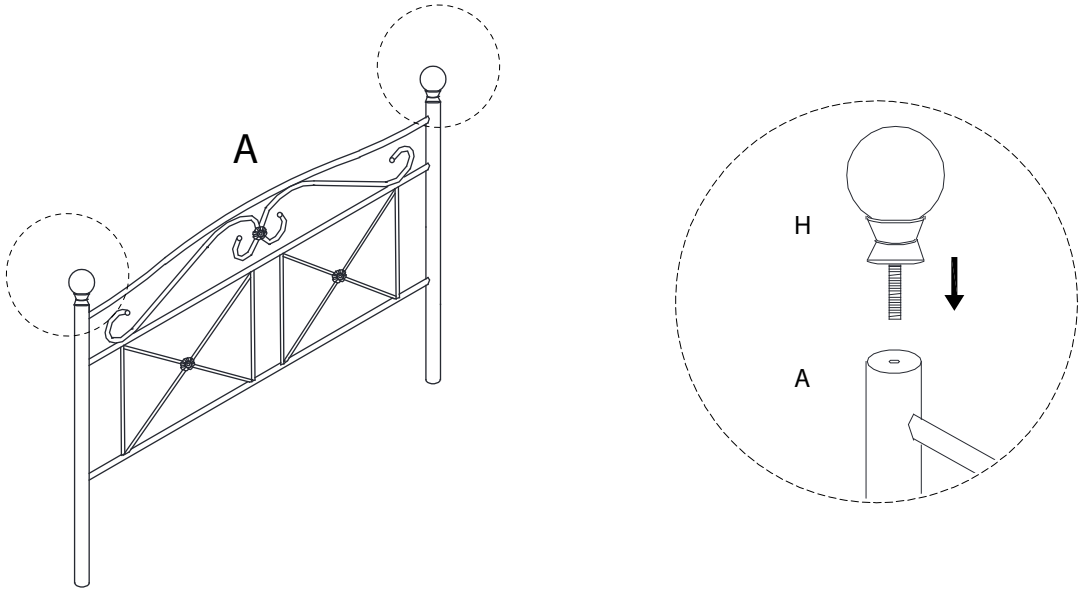

2

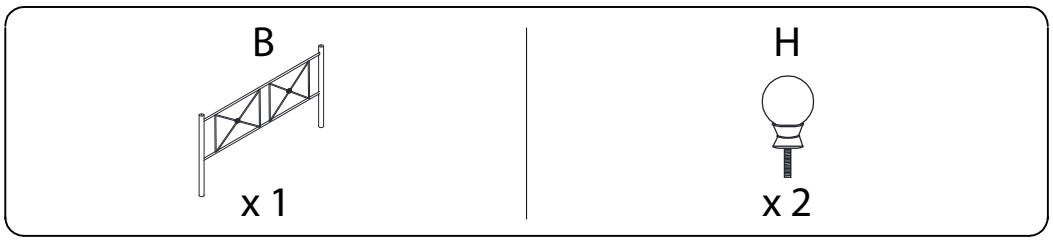

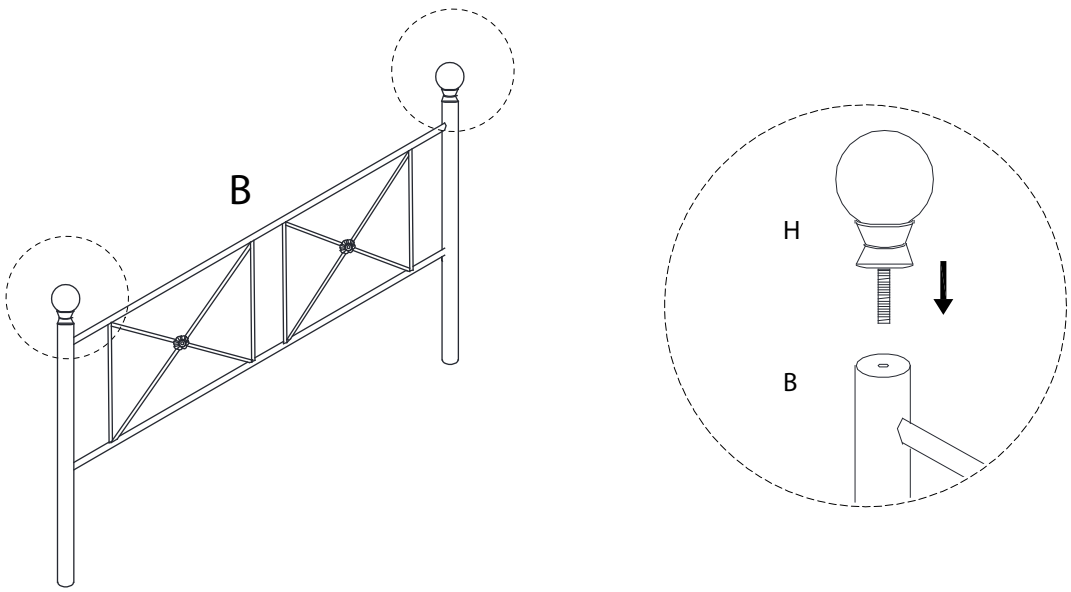

3

E	L	R	N	S
	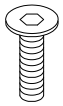 M6 x 20	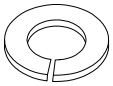		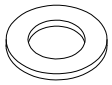
x 2	x 8	x 8	x 1	x 8

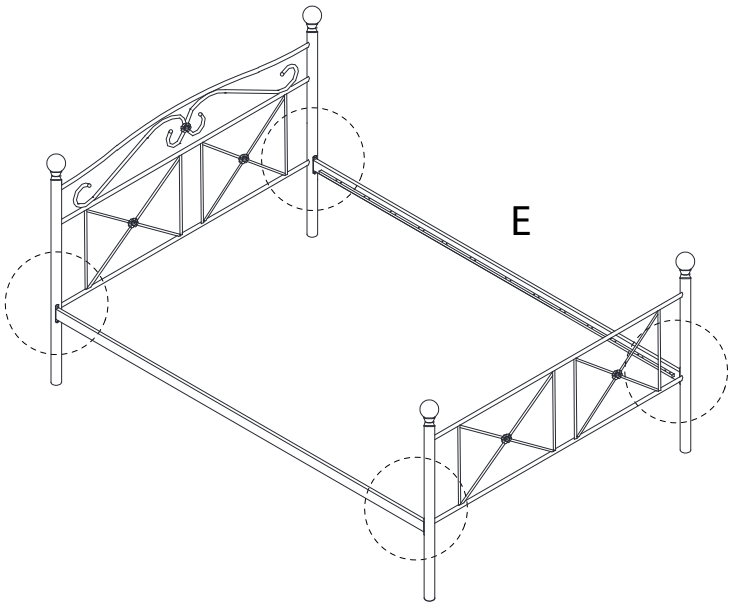

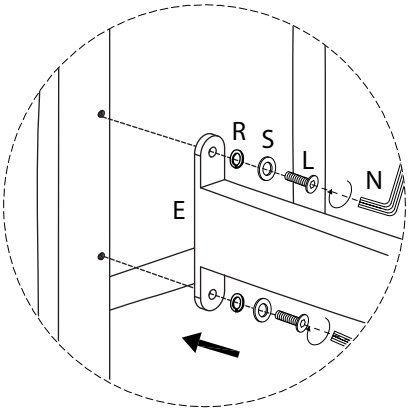

4

D	O	M	N	J
		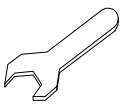		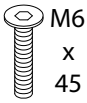 M6 x 45
x 3	x 6	x 1	x 1	x 6

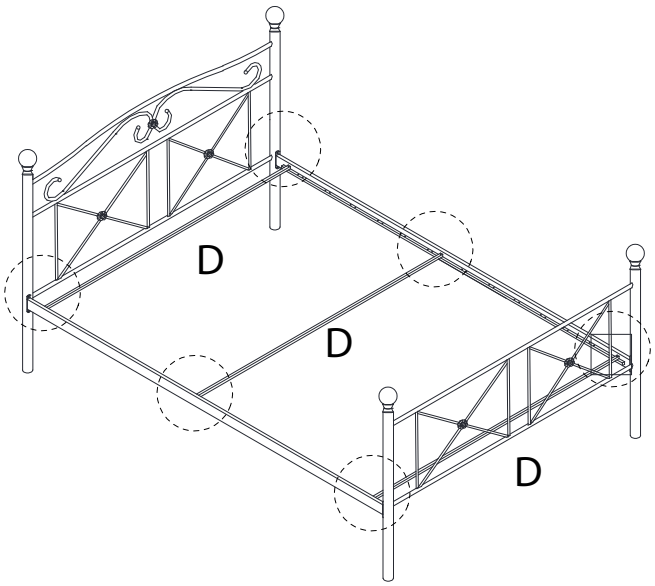

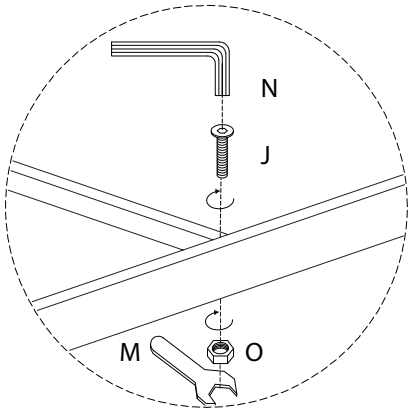

1016/BED.180.RODEZ/170719/

5

C	O	M	N	S	I
		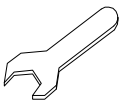	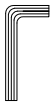	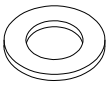	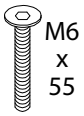 M6 x 55
x 2	x 4	x 1	x 1	x 4	x 4

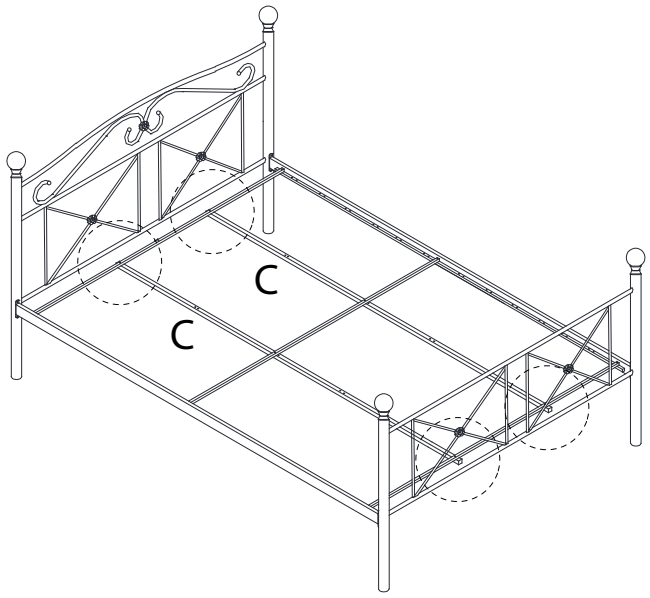

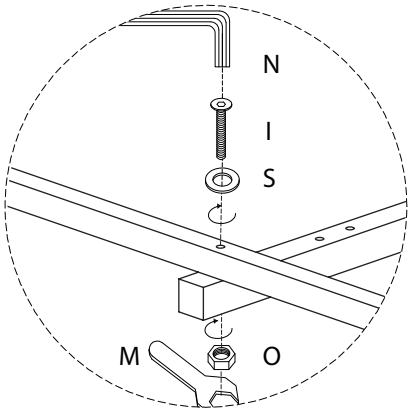

7

F	O	M	N	S	K	I
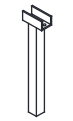		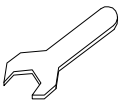	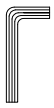	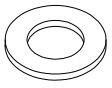	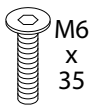 M6 x 35	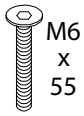 M6 x 55
x 6	x 12	x 1	x 1	x 12	x 10	x 2

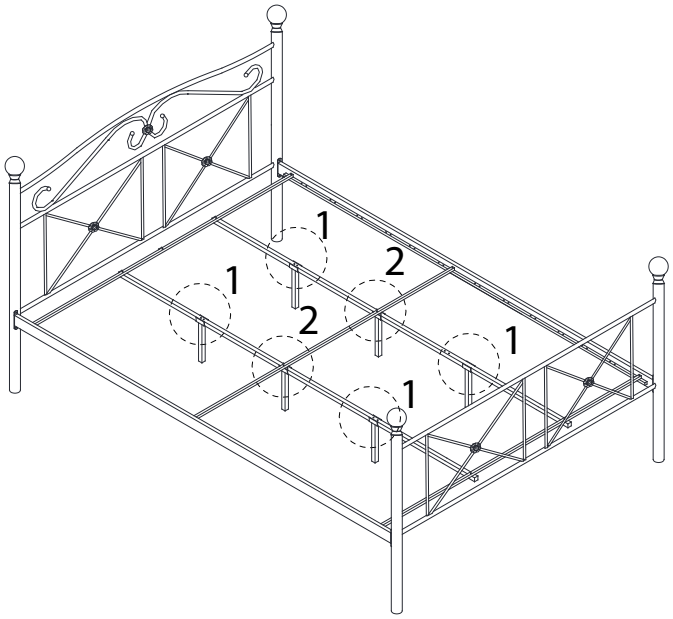

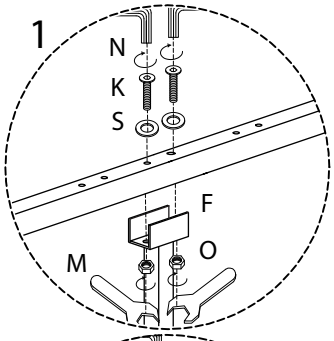

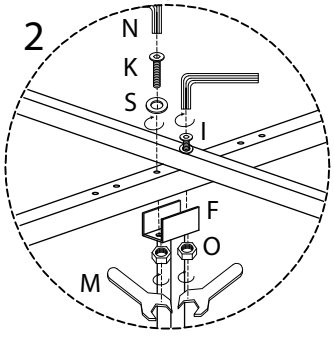

8

G	P	Q
	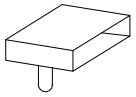	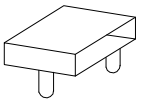
x 36	x 24	x 24

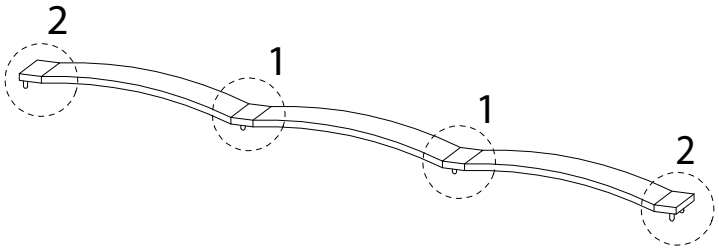

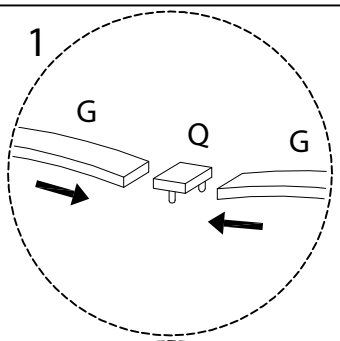

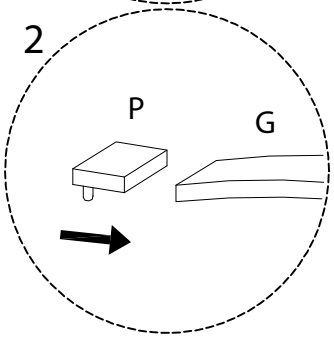

9

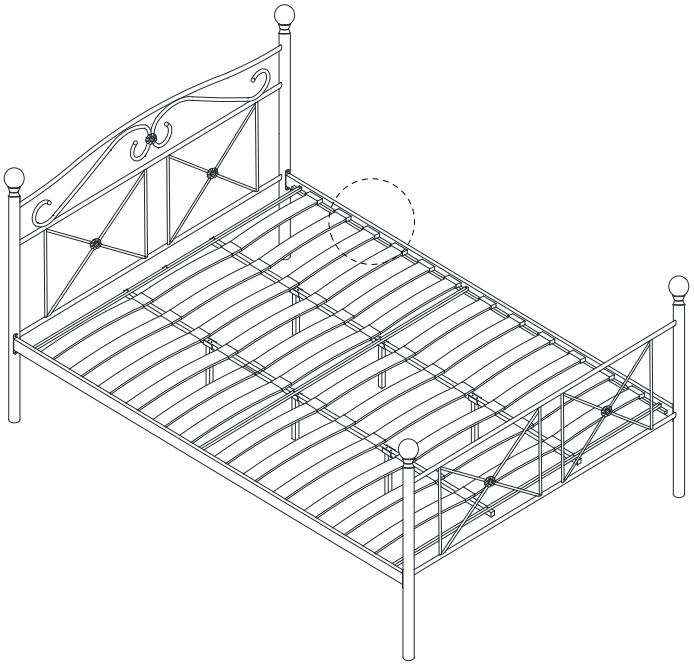

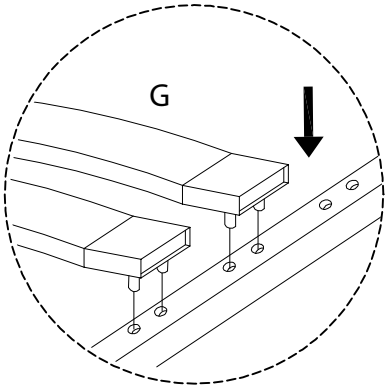

1016/BED.180.RODEZ/170719/