ASSEMBLY INSTRUCTION

step1

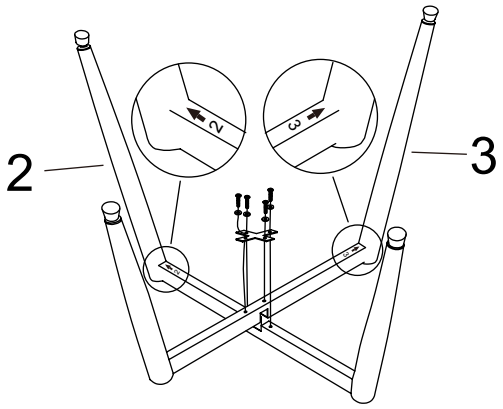

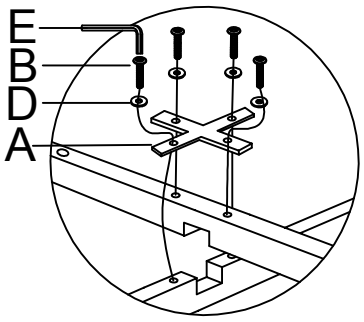

step2

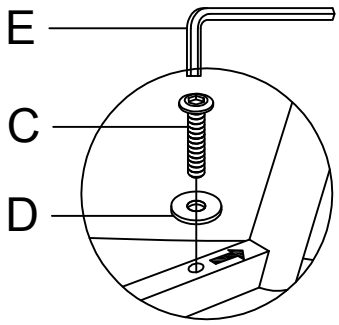

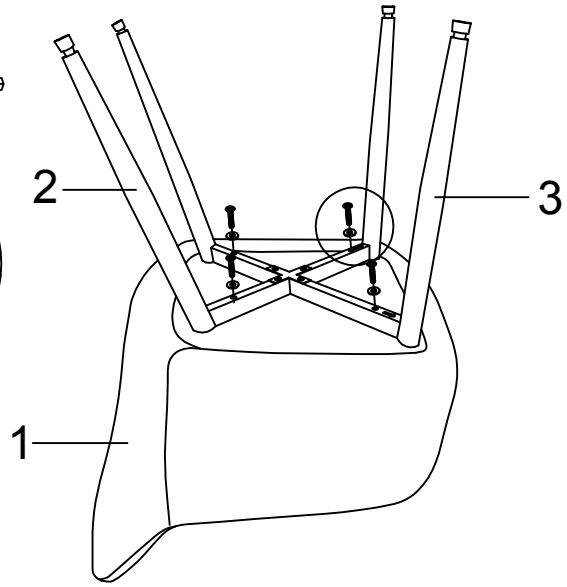

step3

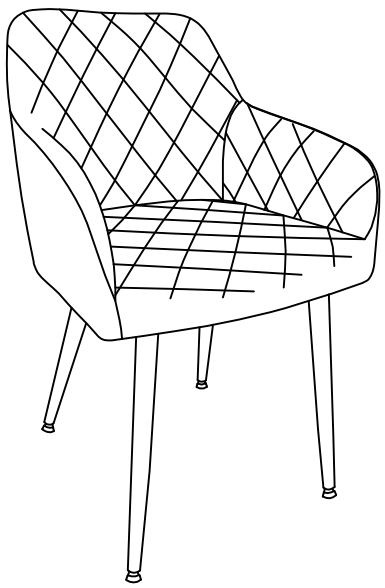

1	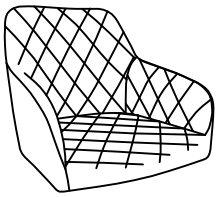	X1
2	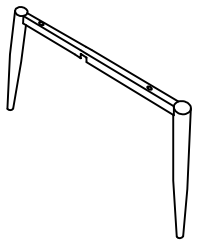	X1
3	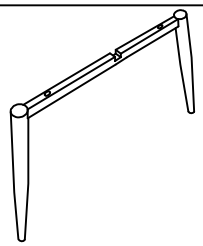	X1
A	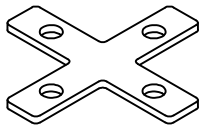	X1
B	 M6*13	X4
C	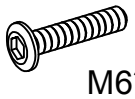 M6*45	X4
D	 Ø6*Ø16	X8
E	 5#	X1