77244

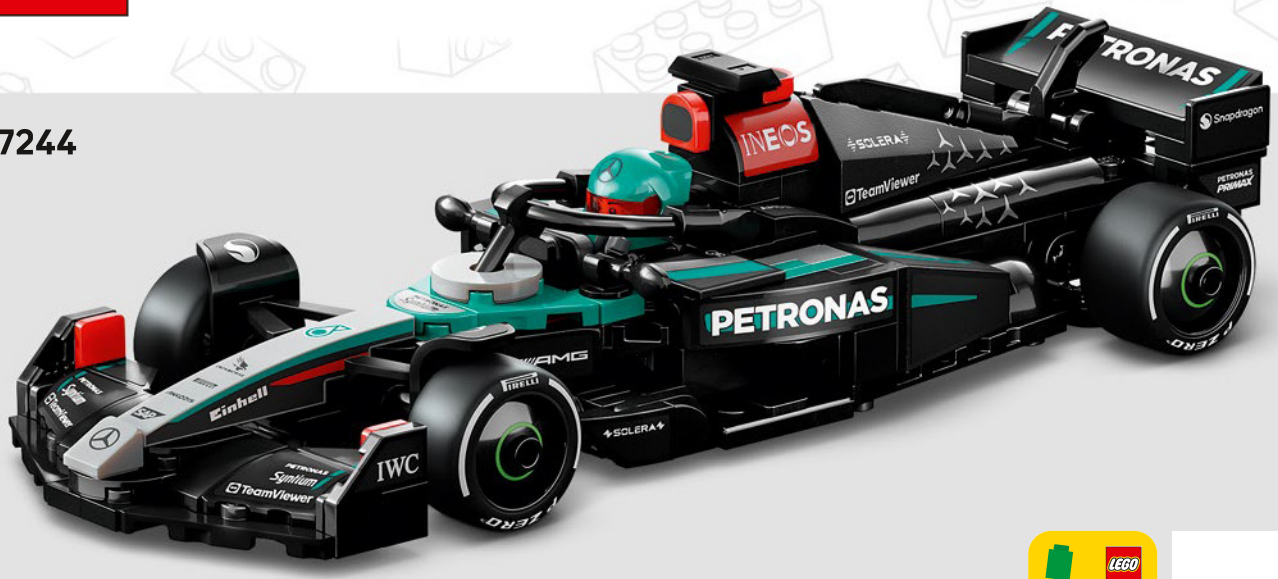

LEGO® Builder

LEGO.com/sustainable-packaging



FR DONNEZ OU RECYCLEZ
ASSOCIATION OU MAGASIN OU DÉCHÈTERIE
Adresses sur quefairedemesdechets.fr



BUILDER

Download on the App Store | GET IT ON Google Play | 腾讯应用宝 安卓应用商店

Apple and the Apple logo are trademarks of Apple Inc., registered in the U.S. and other countries and regions. App Store is a service mark of Apple Inc.
Google Play and the Google Play logo are trademarks of Google LLC.
Tencent and the Tencent logo are trademarks of Tencent Inc.

LEGO.com/devicecheck

LEGO® Builder

EN Ask parents' permission before going online I **DE** Eltern um Erlaubnis bitten, bevor du online gehst I **FR** Demande l'autorisation d'un parent avant d'aller en ligne I **IT** Chiedi il permesso ai tuoi genitori prima di andare online I **ES** Pídeles permiso a tus papás antes de conectarte a Internet I **PT** Pede autorização aos pais antes de acederes online I **ZH** 上网前应先征得父母的同意 I **PL** Poproś rodziców o zgodę, zanim wejdziesz do Internetu I **CS** Než půjdeš na internet, požádej rodiče o svolení I **SK** Skôr než pôjdeš na internet, vypýtaj si povolenie od rodičov I **HU** Kérj szülői engedélyt, mielőtt online csatlakoznál! I **RO** Cere permisiunea părinților înainte de a te conecta online I **BG** Поискайте разрешение от родител, преди да влезете онлайн I **LV** Pirms došanās tiešsaistē palūdz atļauju vecākiem I **ET** Enne Interneti kasutamist küsi vanematelt luba I **LT** Prieš prisijungdami prie interneto, atsiklauskite tėvų

AMG PETRONAS FORMULA ONE TEAM

Fuel capacity:
110 kg (242 lbs)



Kraftstoffkapazität: 110 kg | Capacité du réservoir : 110 kg | Capacità carburante: 110 kg | Capacidad de combustible: 110 kg (242 lb) | Capacidade de combustível: 110 kg (242 lbs) | 油箱容量：110 千克（242 磅） | Pojemność zbiornika paliwa: 110 kg | Kapacita paliva: 110 kg | Kapacita paliva: 110 kg | Üzemanyag-kapacitás: 110 kg | Capacitatea rezervorului: 110 kg | Капацитет на горивото: 110 кг | Degvielas tilpums: 110 kg | Kütusemaht: 110 kg | Maksimalus degalų kiekis: 110 kg

Fuel capacity:
Infinite curiosity



Kraftstoffkapazität: Unendliche Neugier | Capacité du réservoir : capacité d'exploration infinie | Capacità carburante: curiosità infinita | Capacidad de combustible: Curiosidad infinita | Capacidade de combustível: curiosidade infinita | 油箱容量：取决于好奇心 | Pojemność zbiornika paliwa: nieograniczona tak jak wyobraźnia | Kapacita paliva: Nekonečná zvídavost | **SK** Kapacita paliva: Nekonečná zvedavosť | Üzemanyag-kapacitás: végtelen kíváncsiság | Capacitatea rezervorului: curiozitate infinită | Капацитет на горивото: Безкрайно любопитство | Degvielas tilpums: bezgalīga zinātkāre | Kütusemaht: lõputu uudishimu | Maksimalus degalų kiekis: begalė smalsumo

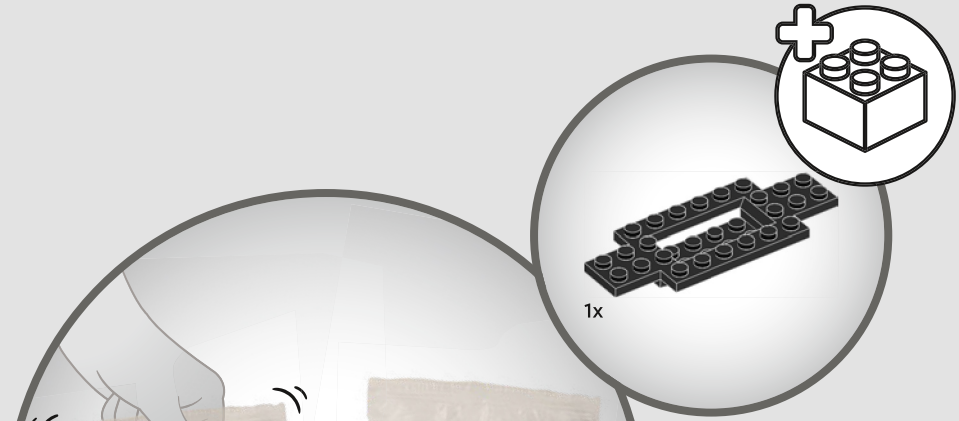
1x
1
2

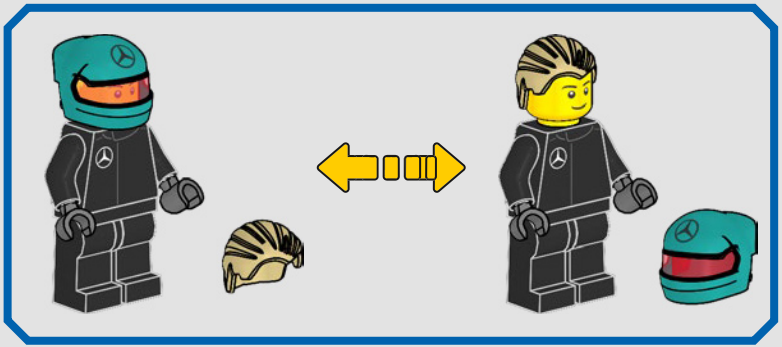

1

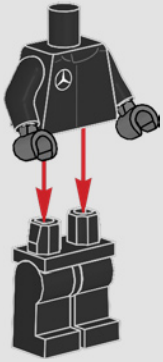

2

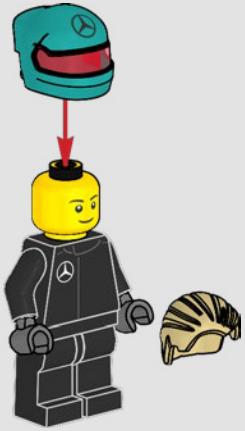

3



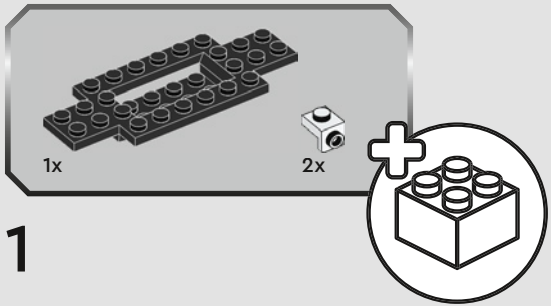

1

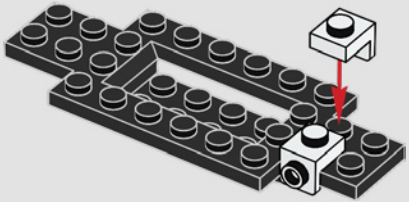



2

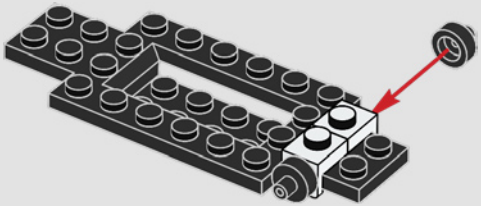



3



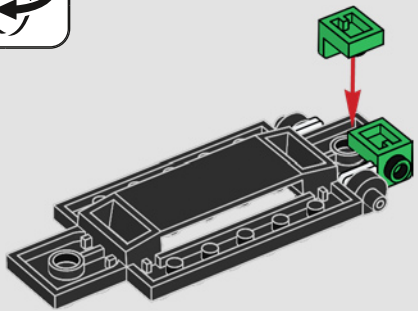

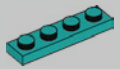

4

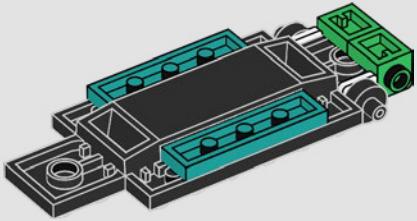



5



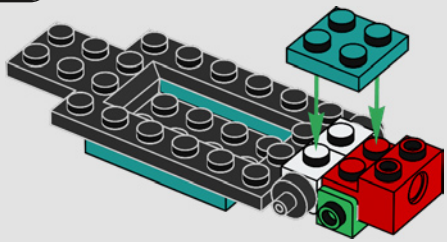



6

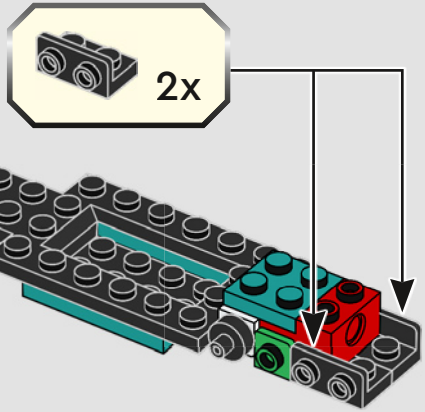

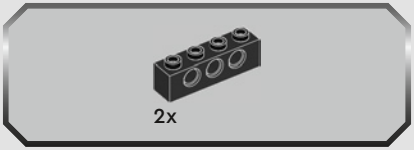

7

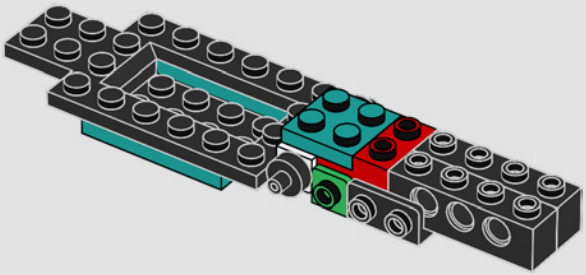

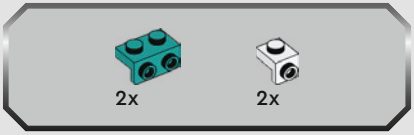

8

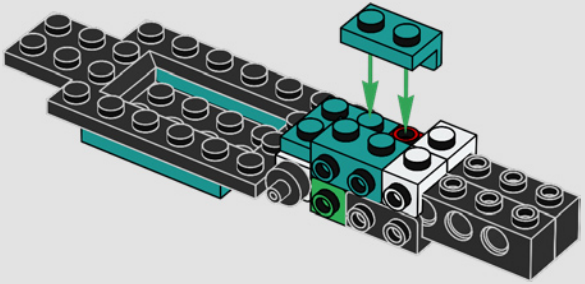

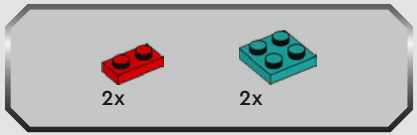

9

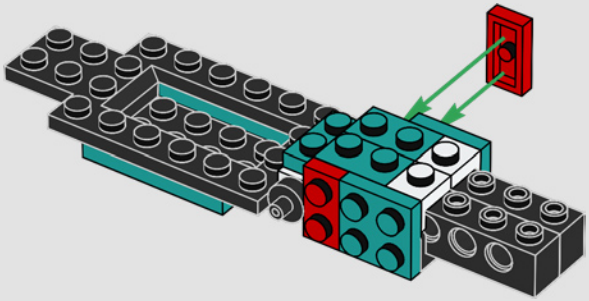



10

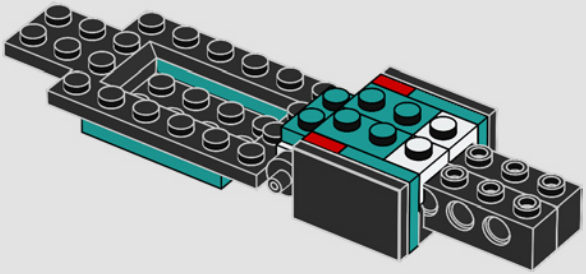



11

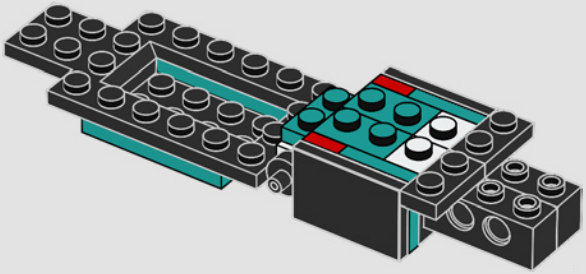



12

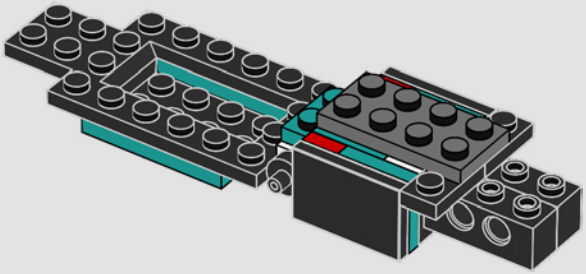

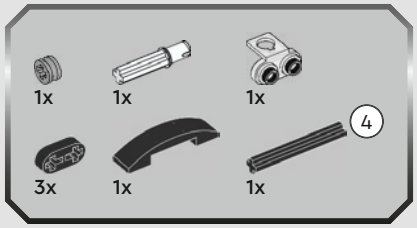

13

1

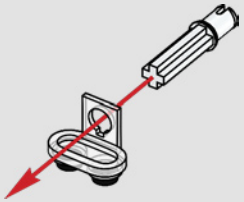

2

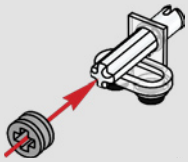

3



4

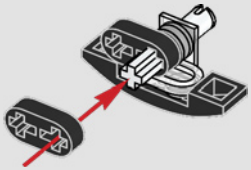

5

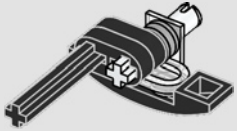



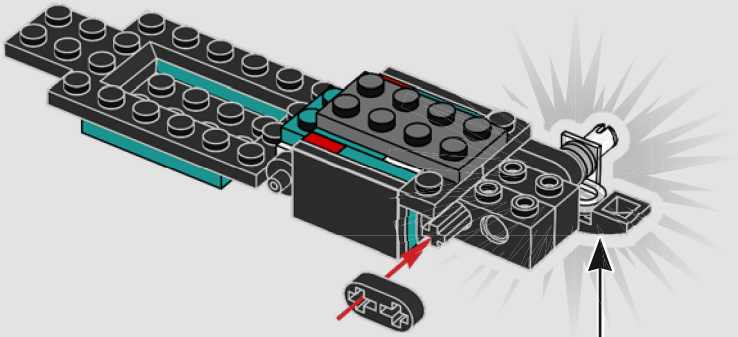

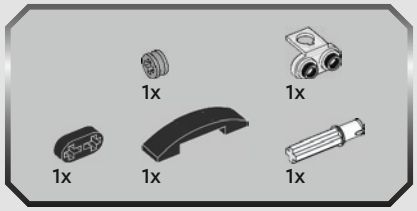

14

1

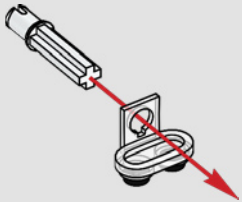

2

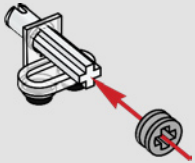

3

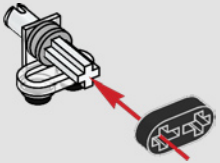

4



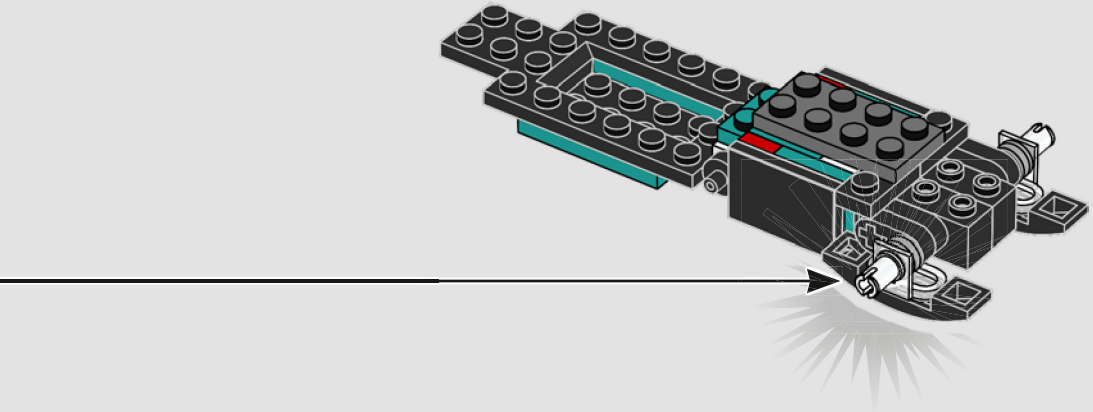

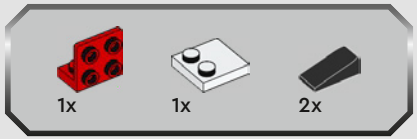

15

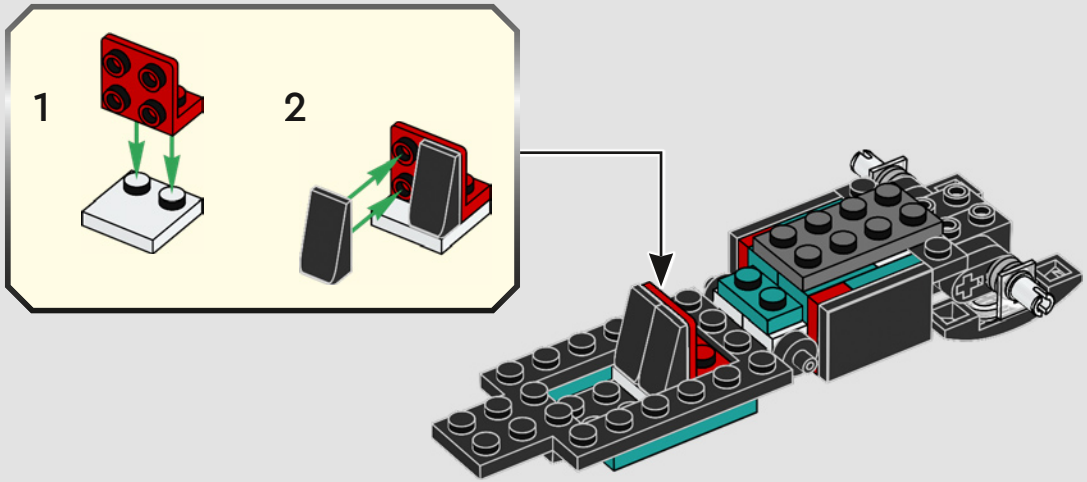

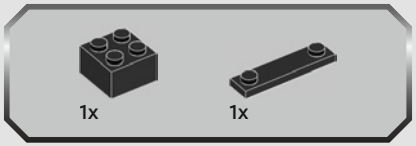

16

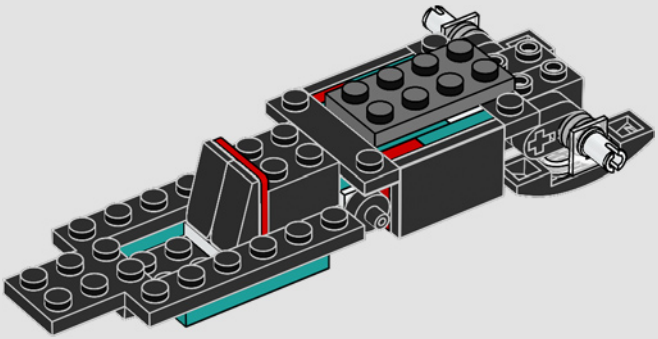

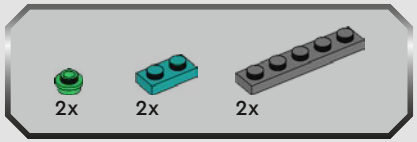

17

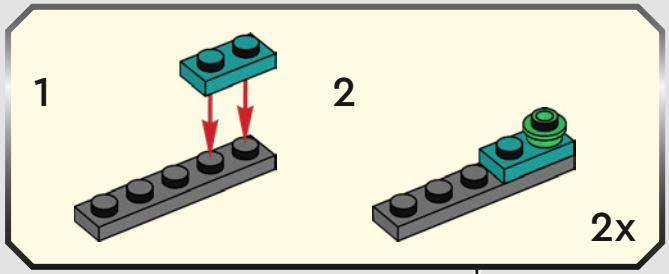

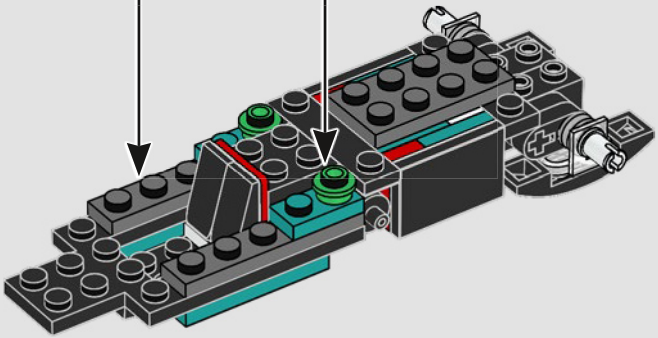

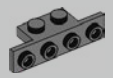

2x

18

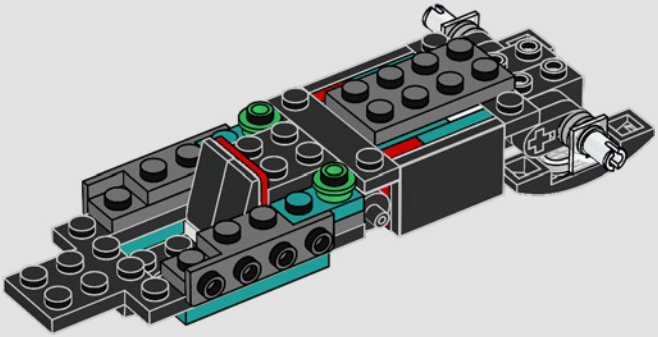



19

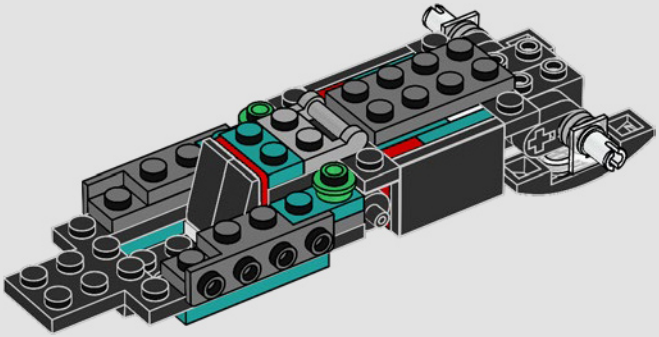

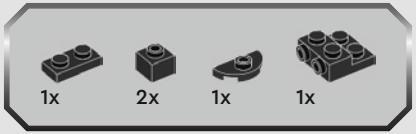

20

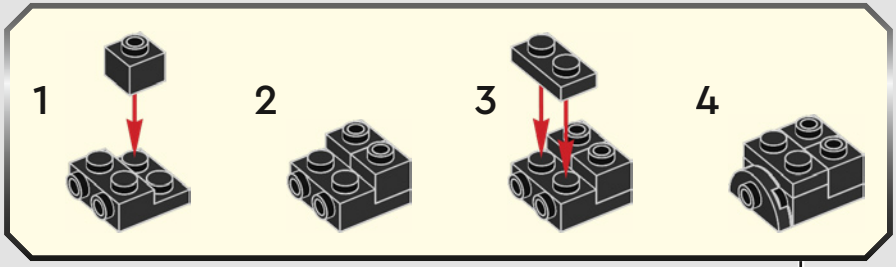

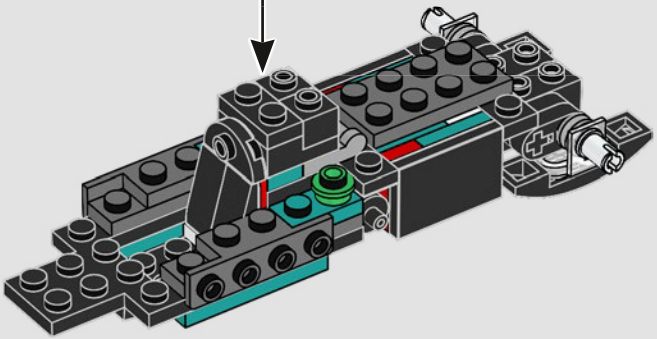



2x

21

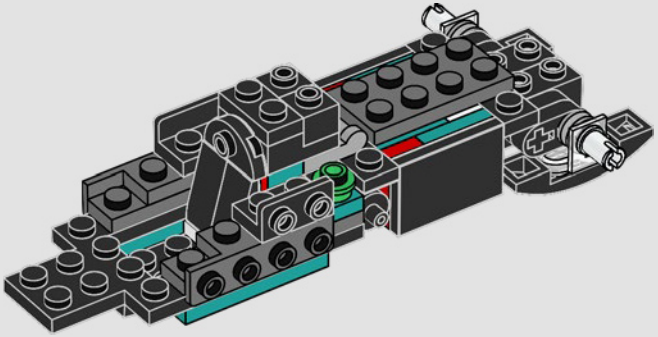

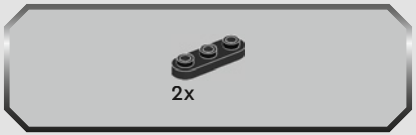

22

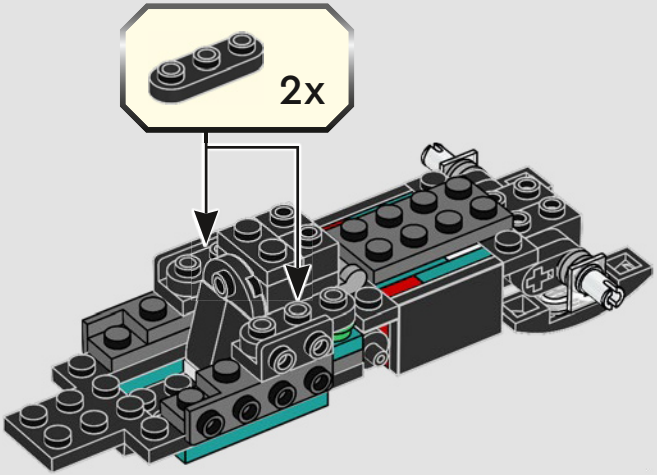

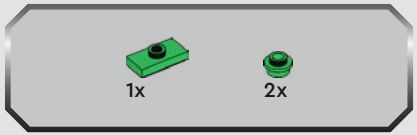

23

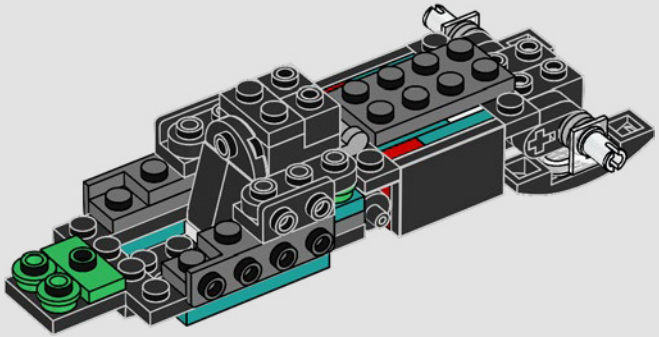



24

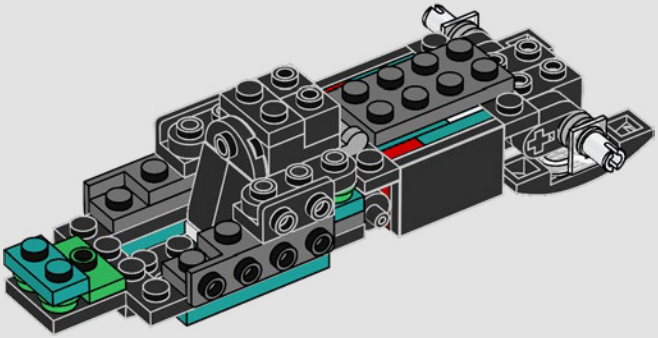



25

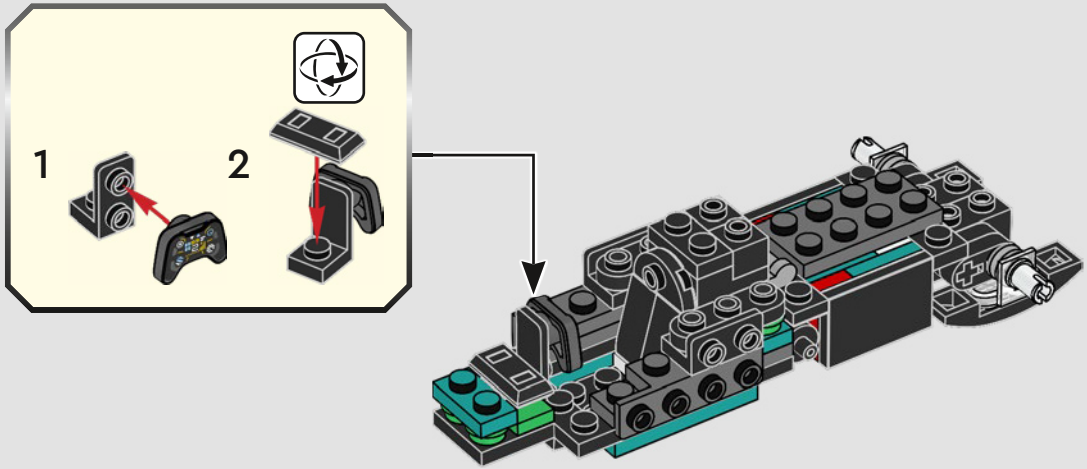



26

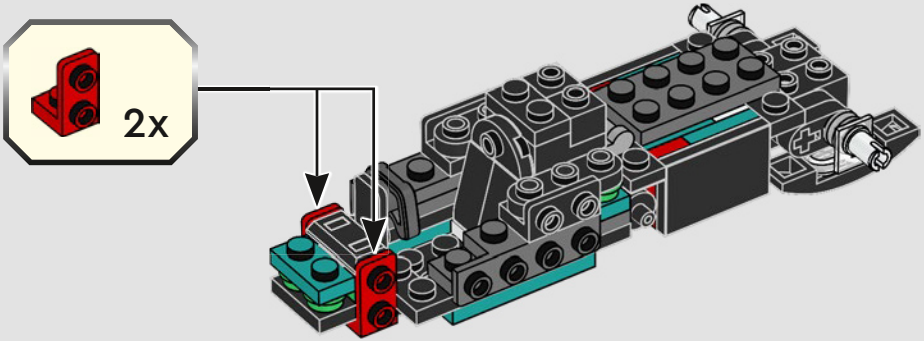

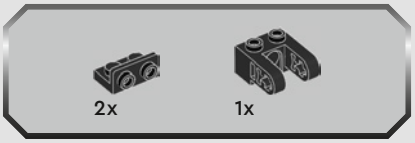

27

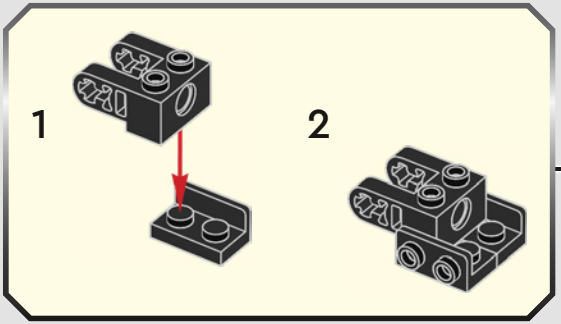

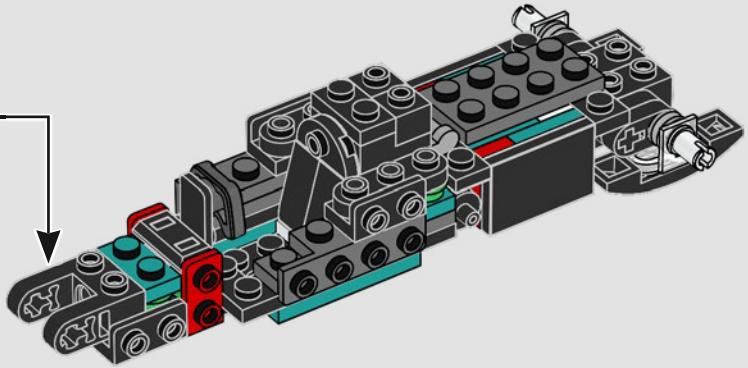



28

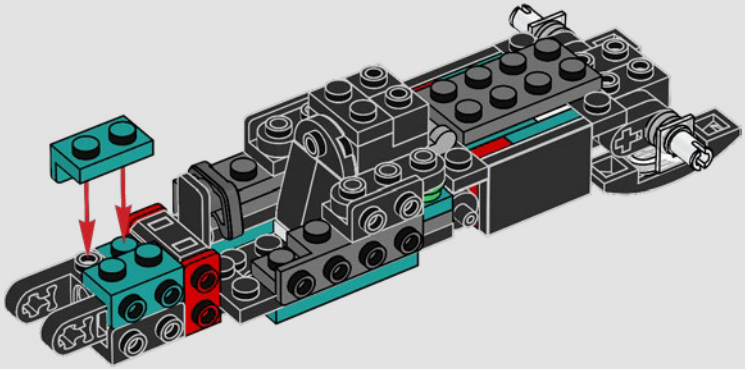

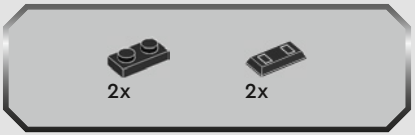

29

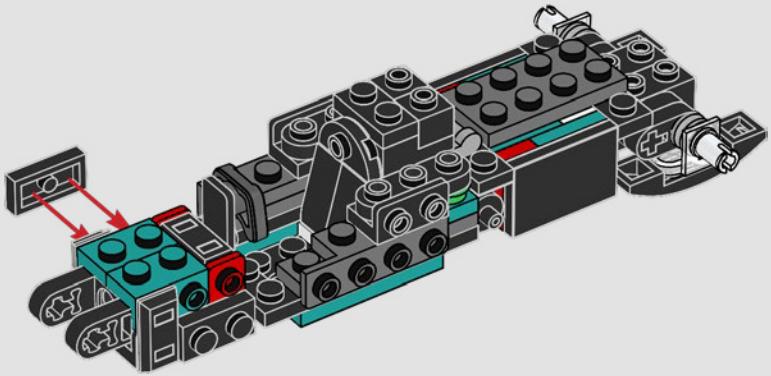



30

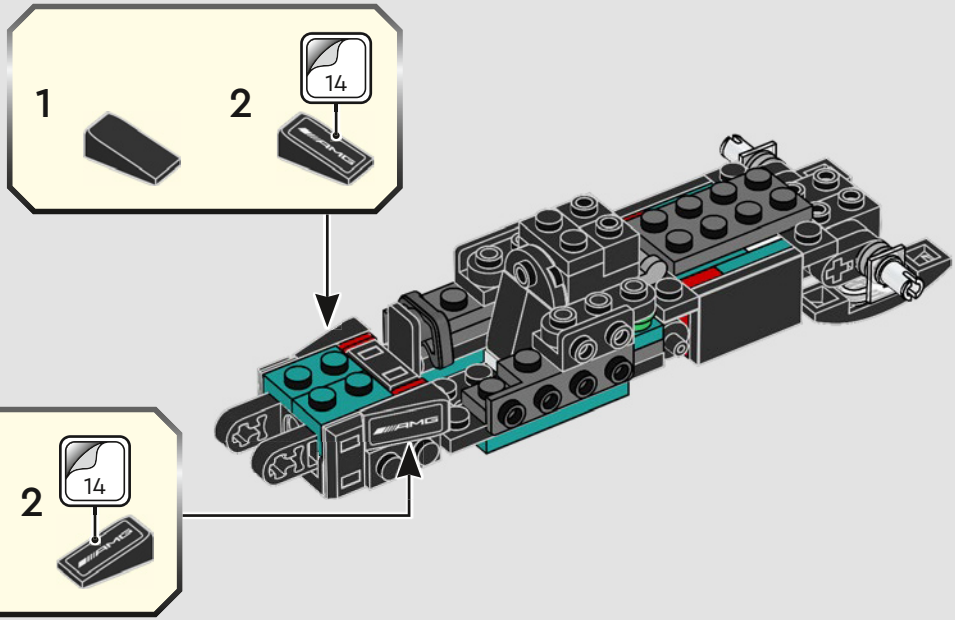

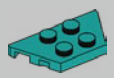

1x

31

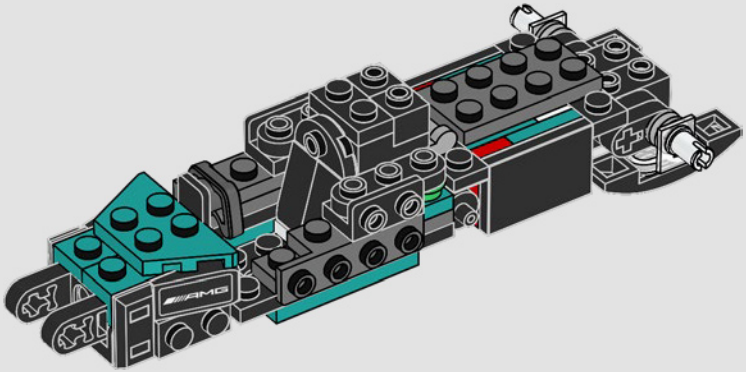

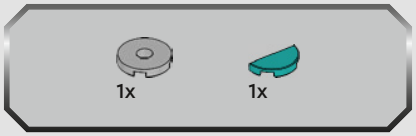

32

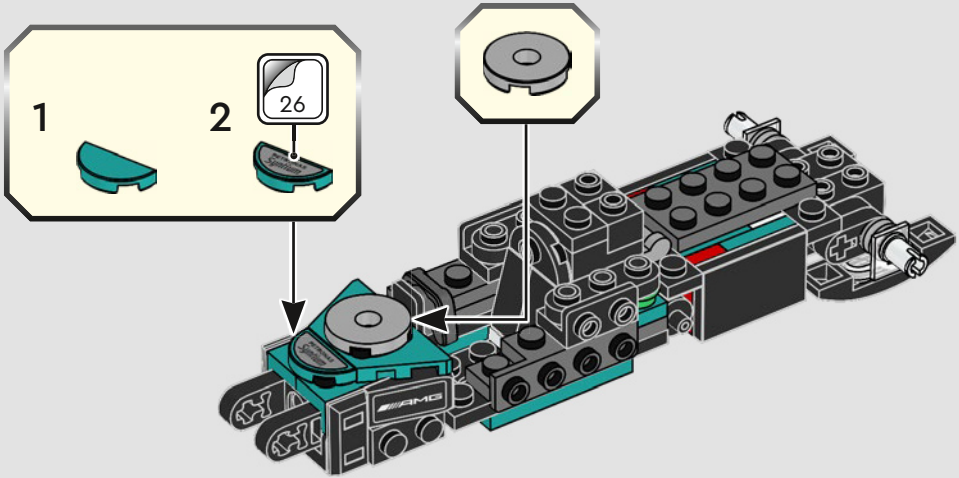


3
4



33

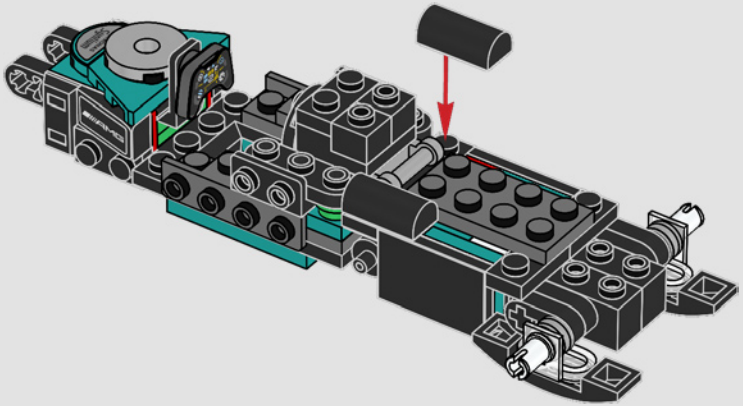



4x

34

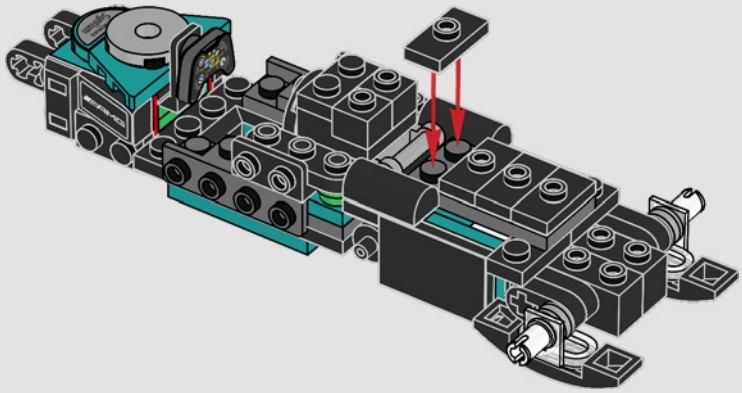

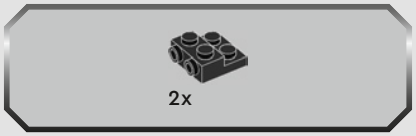

35

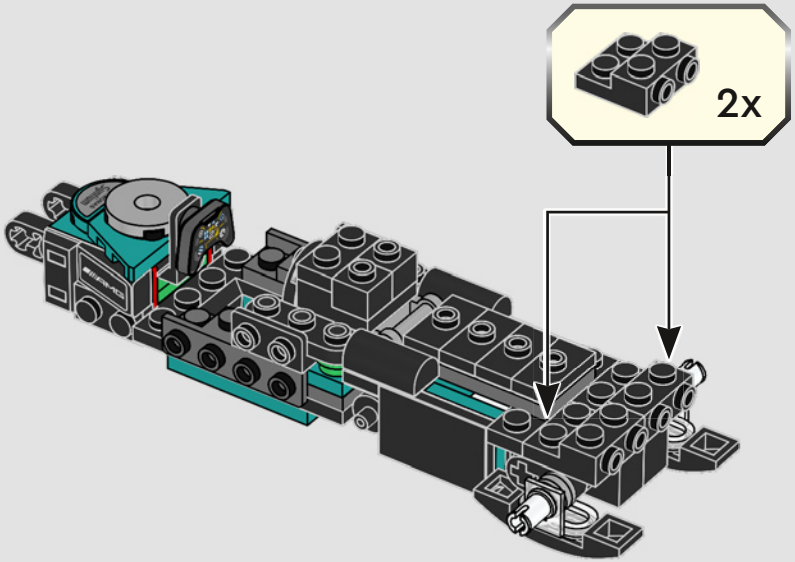



36

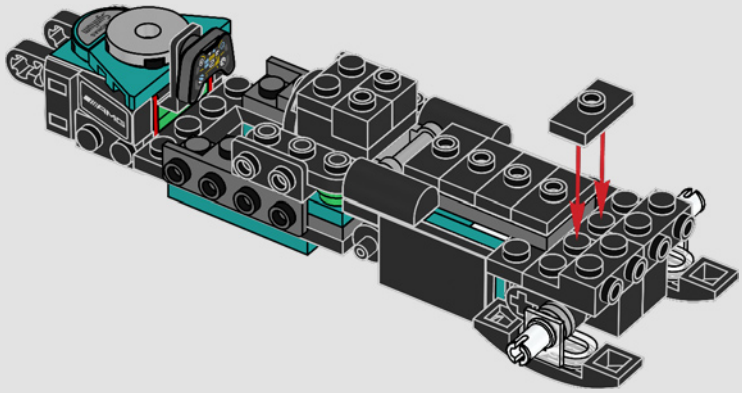

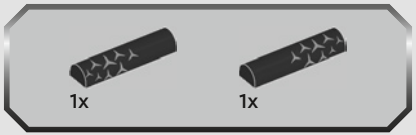

37

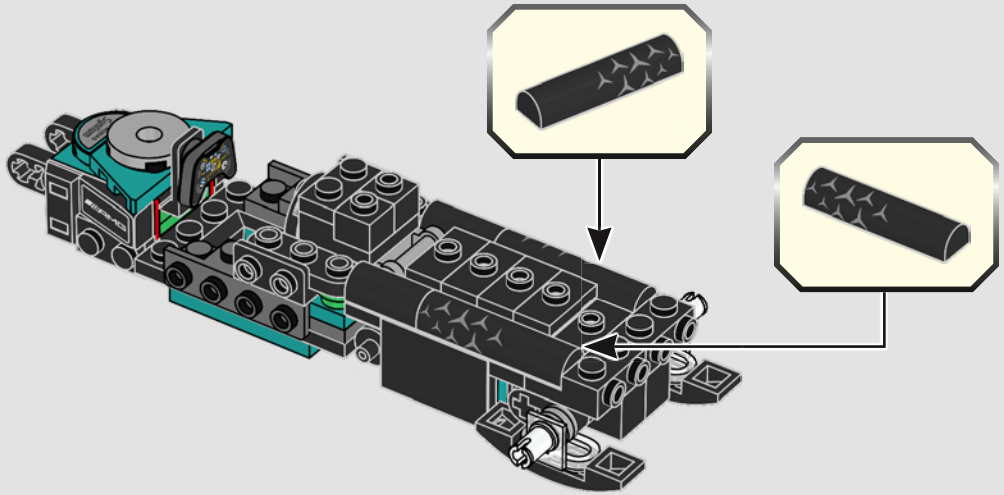



3x

38

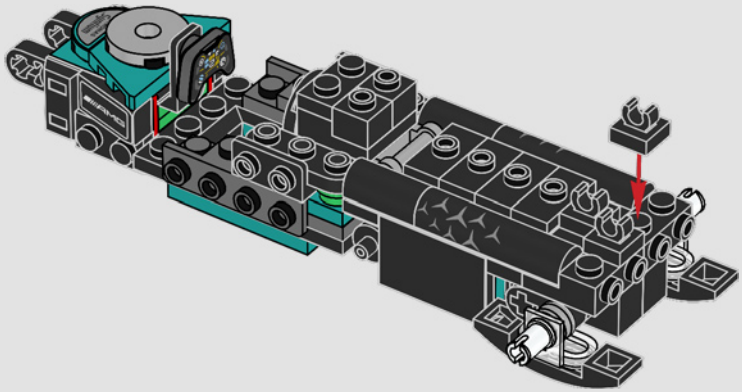

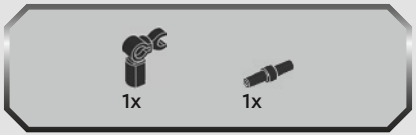

39

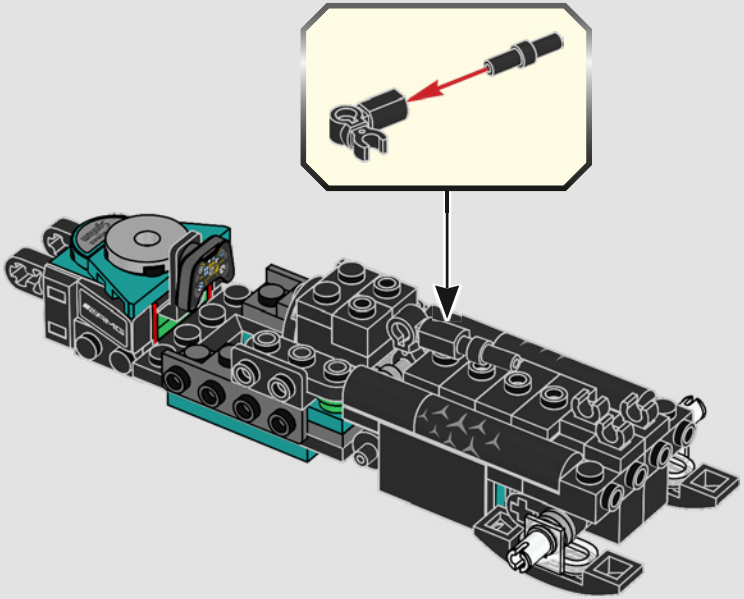

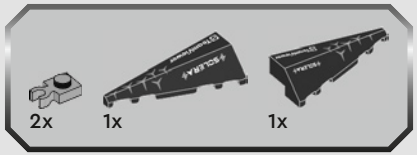

40

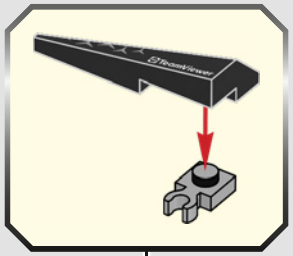

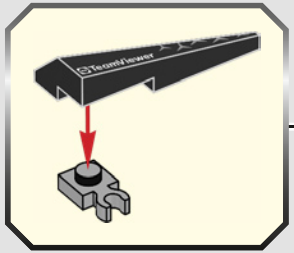

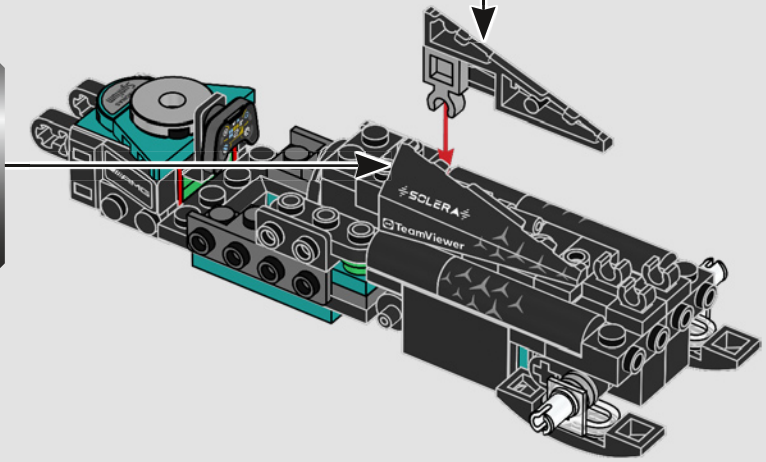

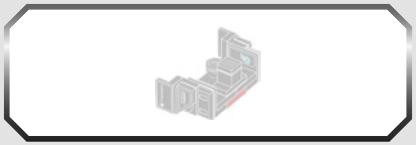

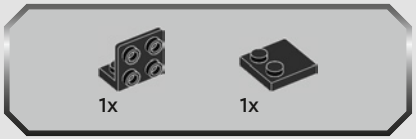

41

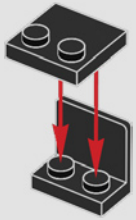

42



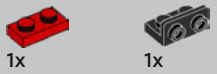

43

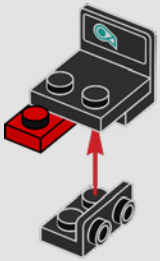

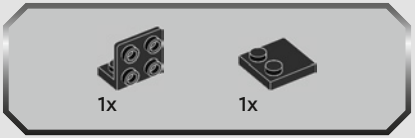

44

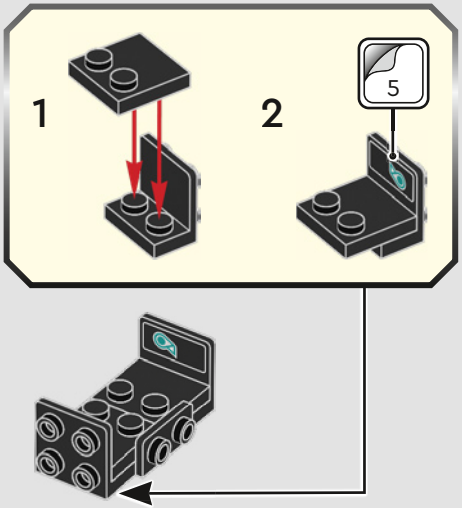



45

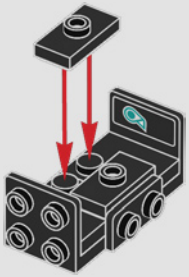

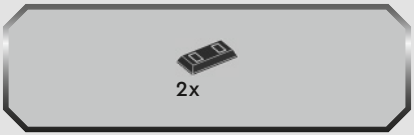

46

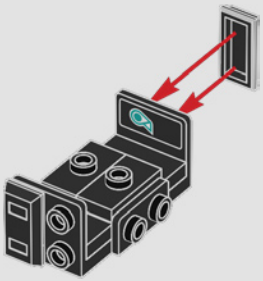

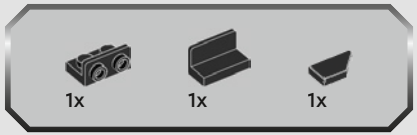

47

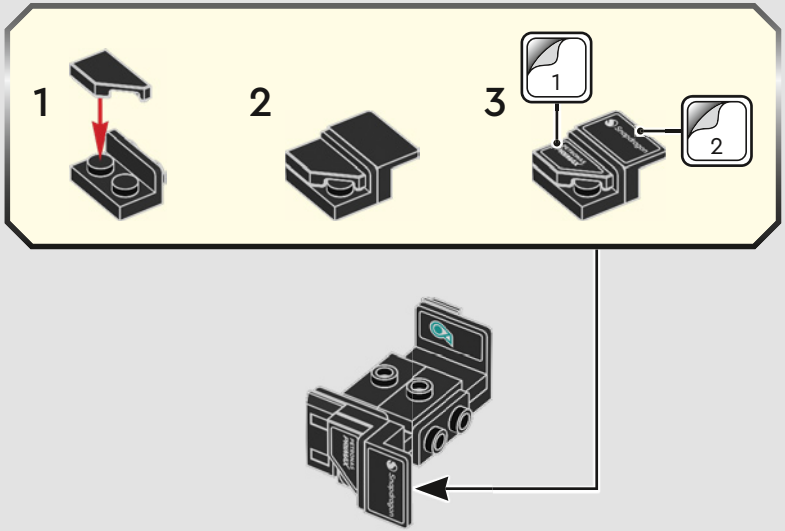

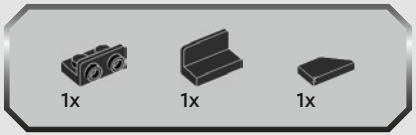

48

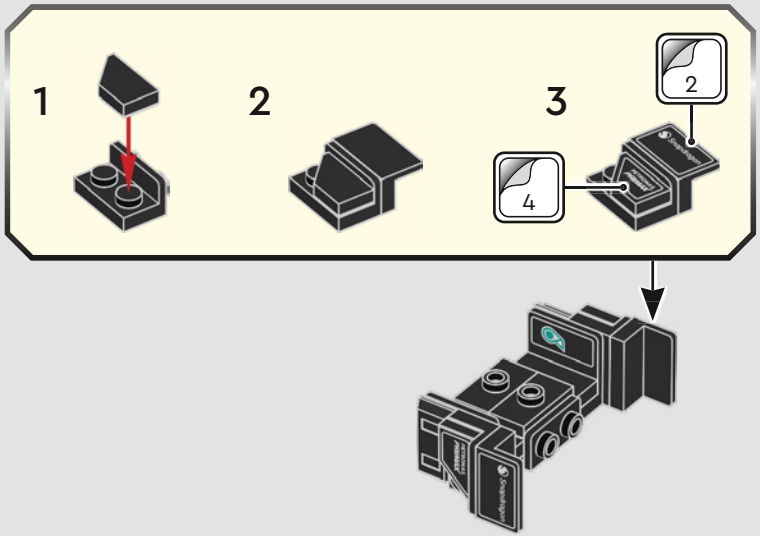

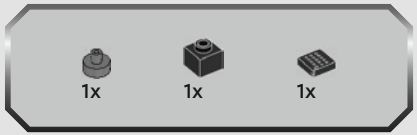

49

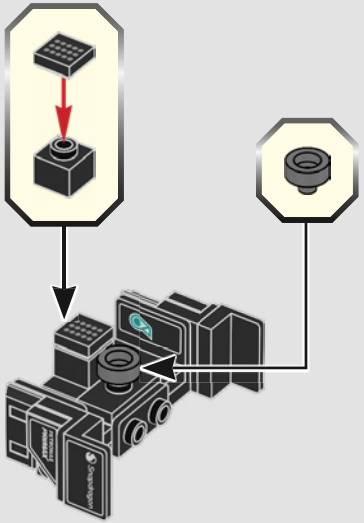

50



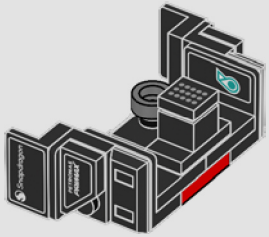

51

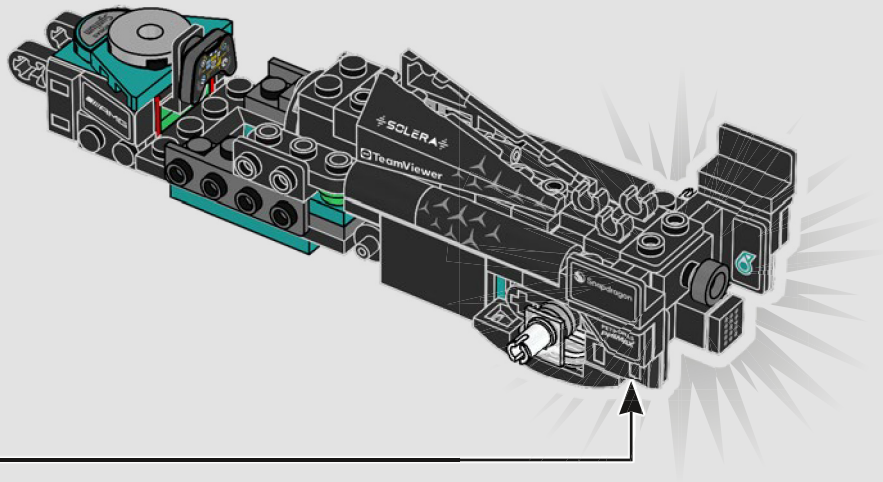



1x

52

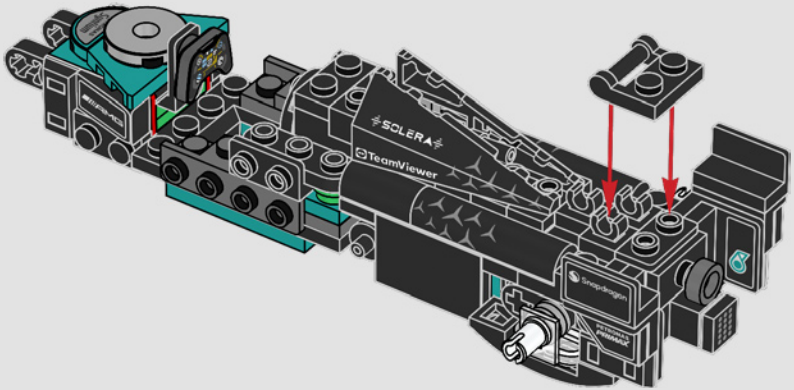

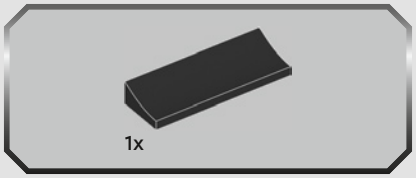

53

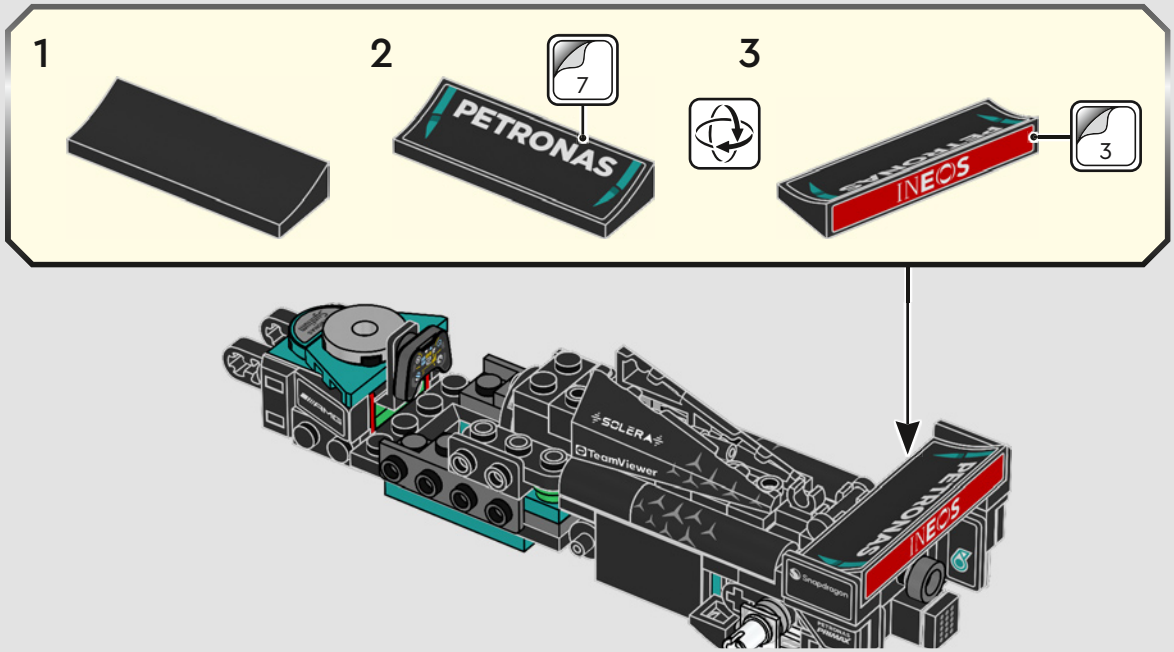

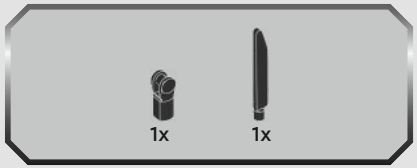

54

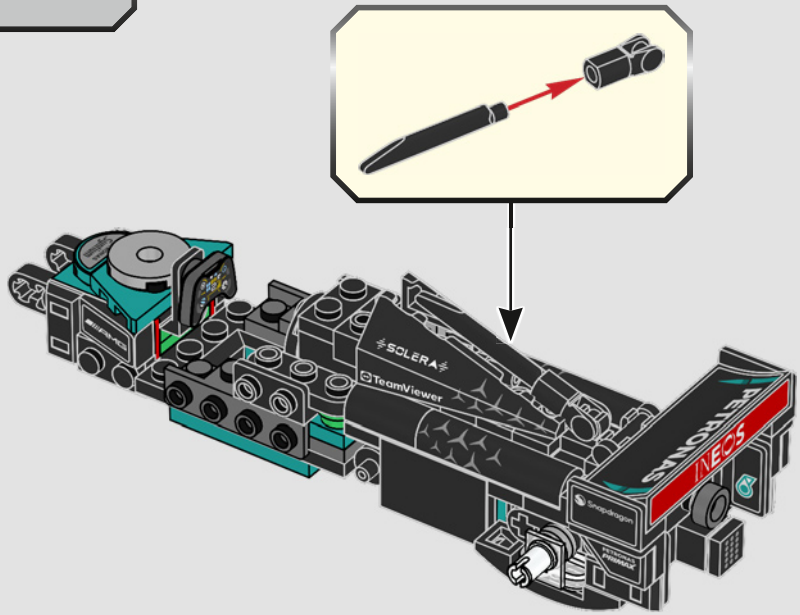



1x

55

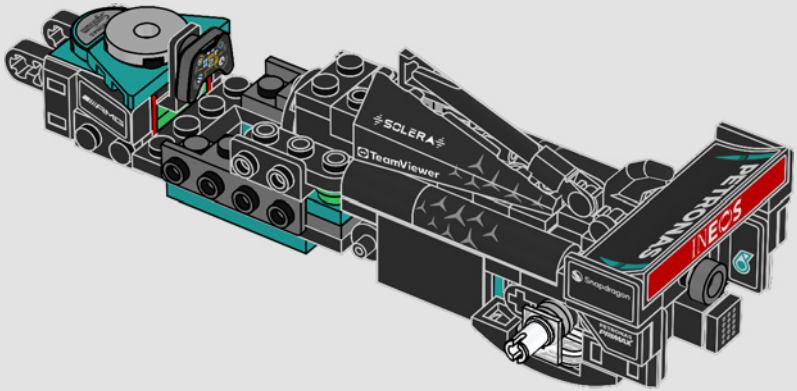



56

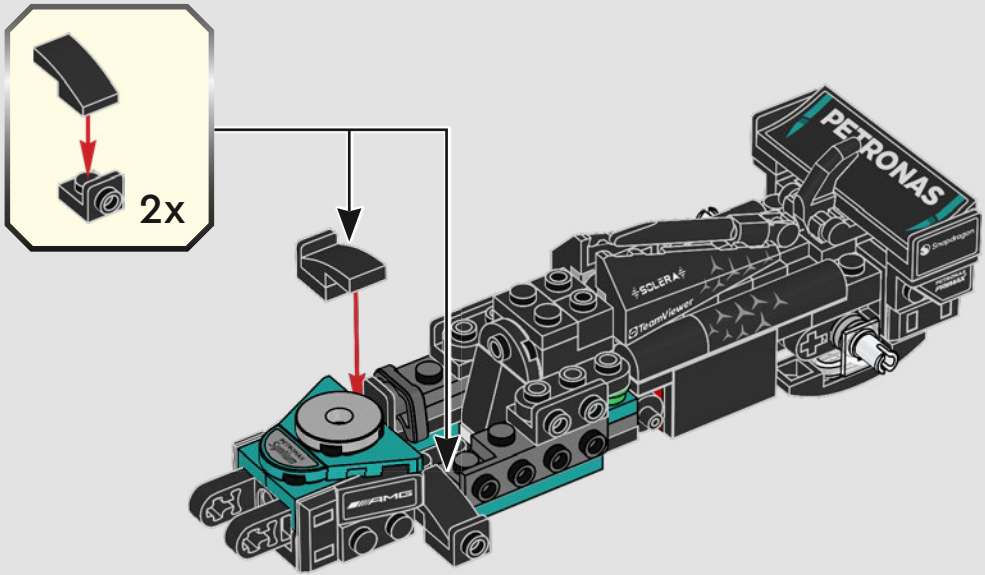

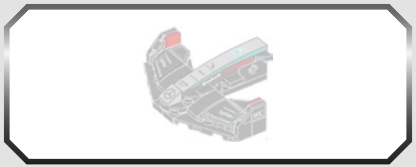

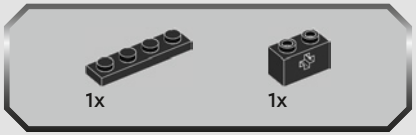

57

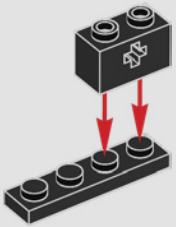

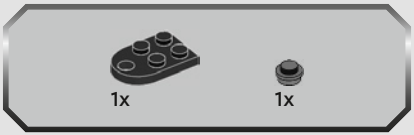

58

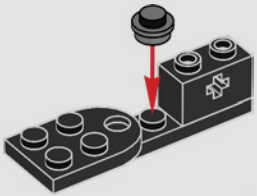

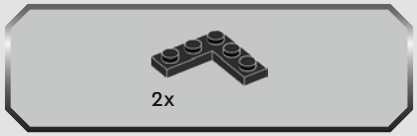

59

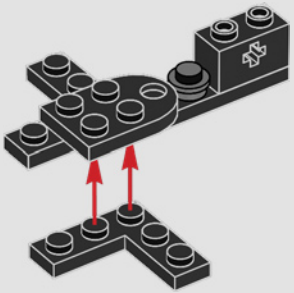



60

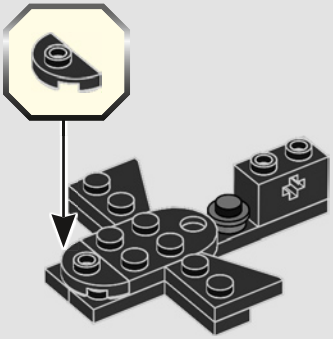



61

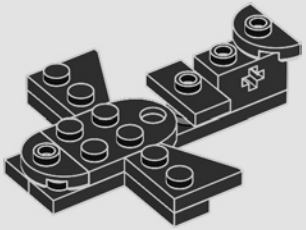



62

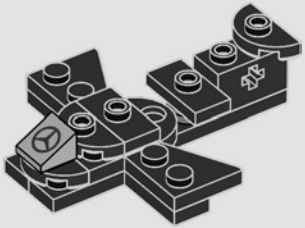

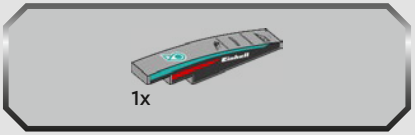

63

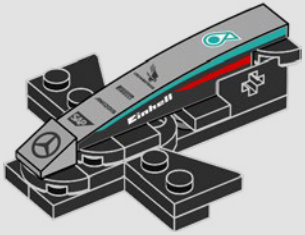



64

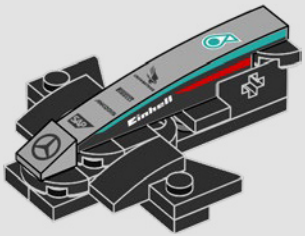

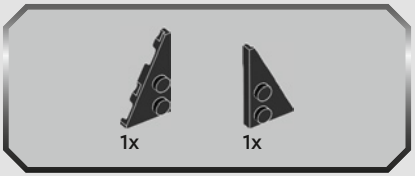

65

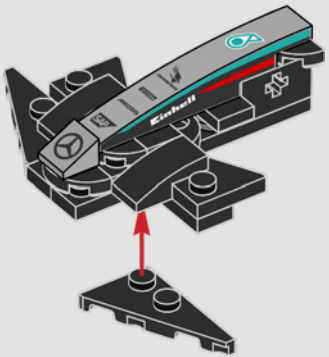



66

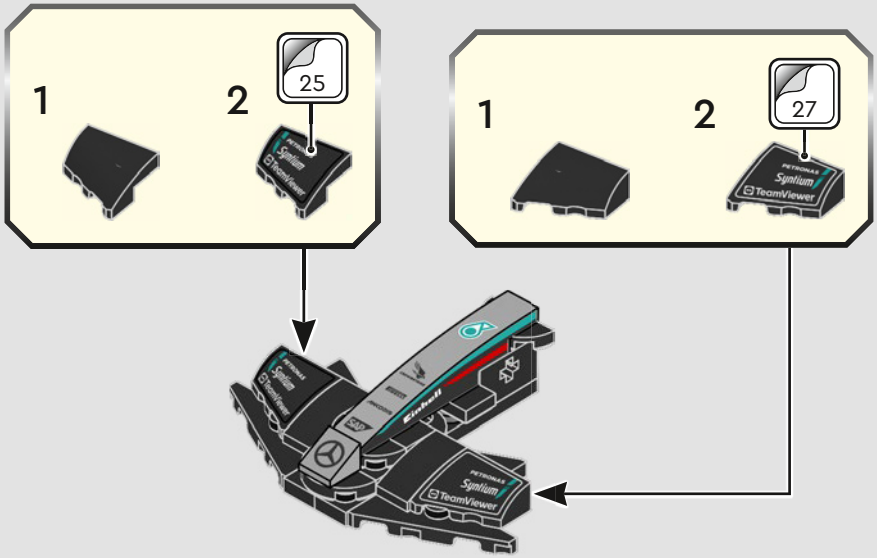

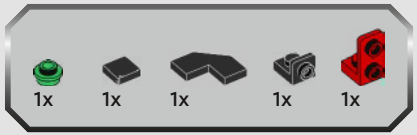

67

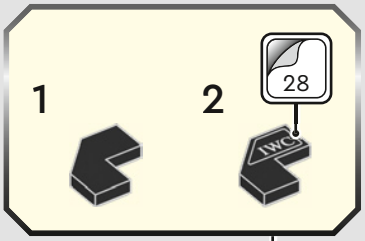



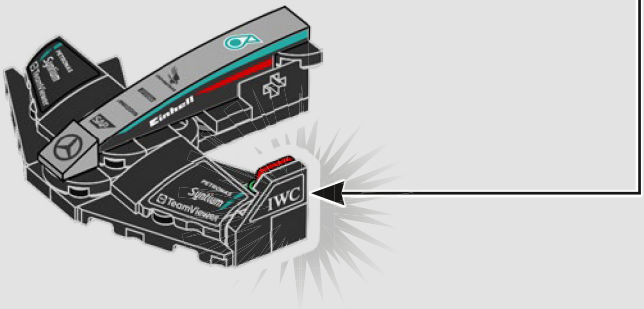

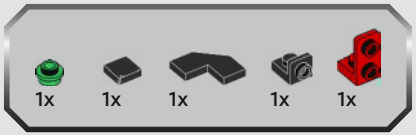

68

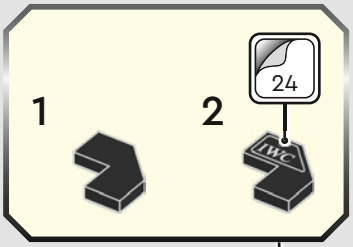



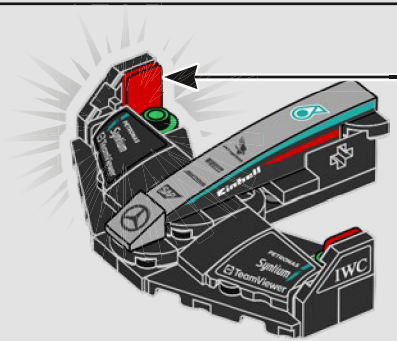

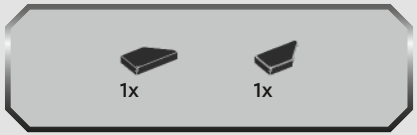

69

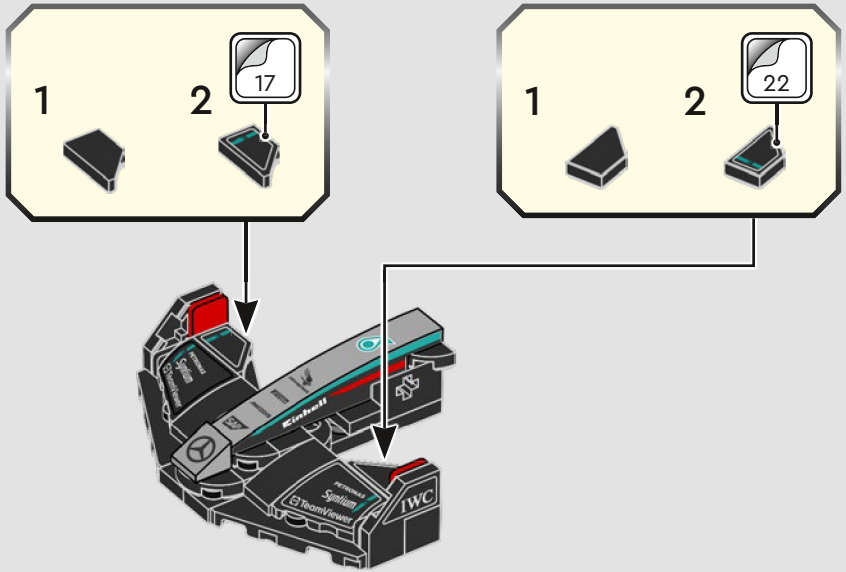

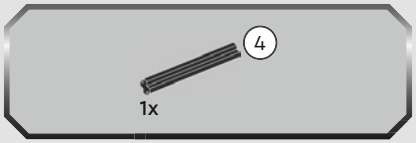



70

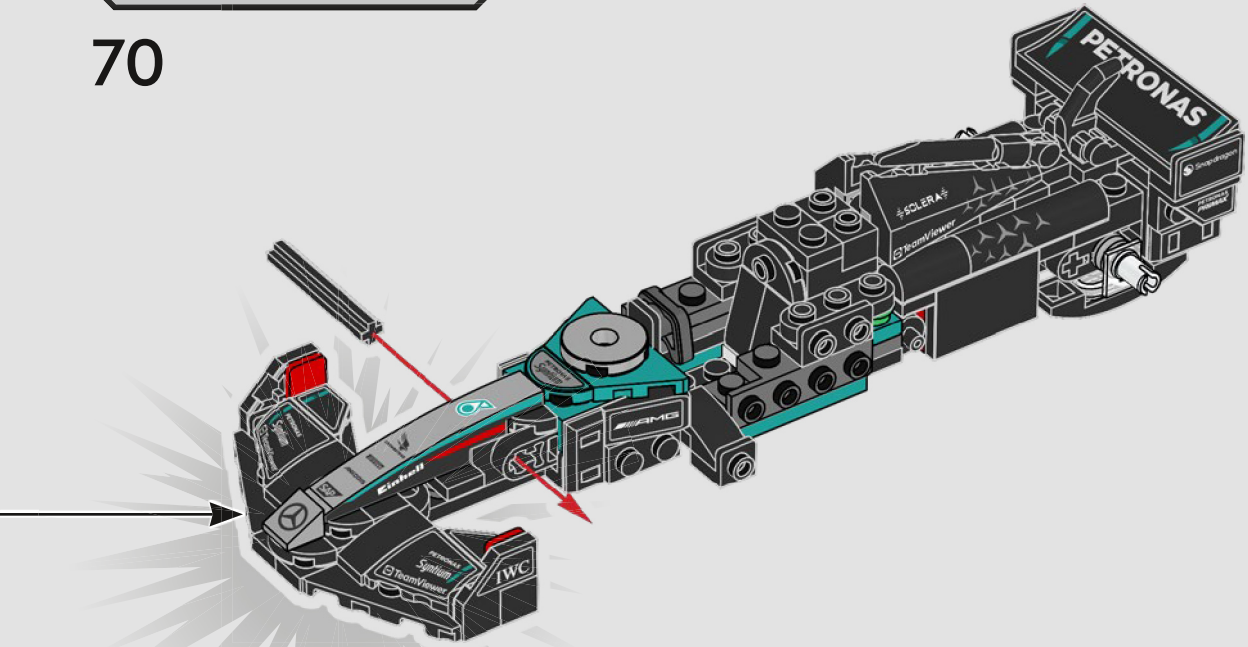



71

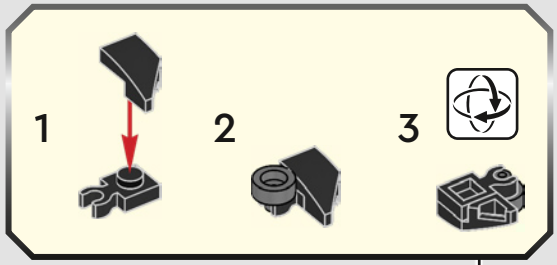

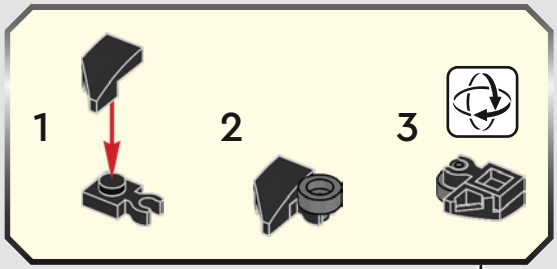


5
6

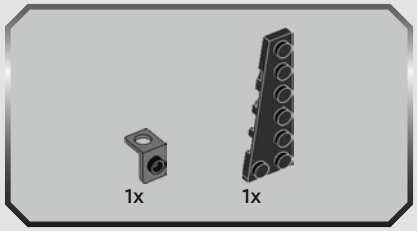
1x
1x

72

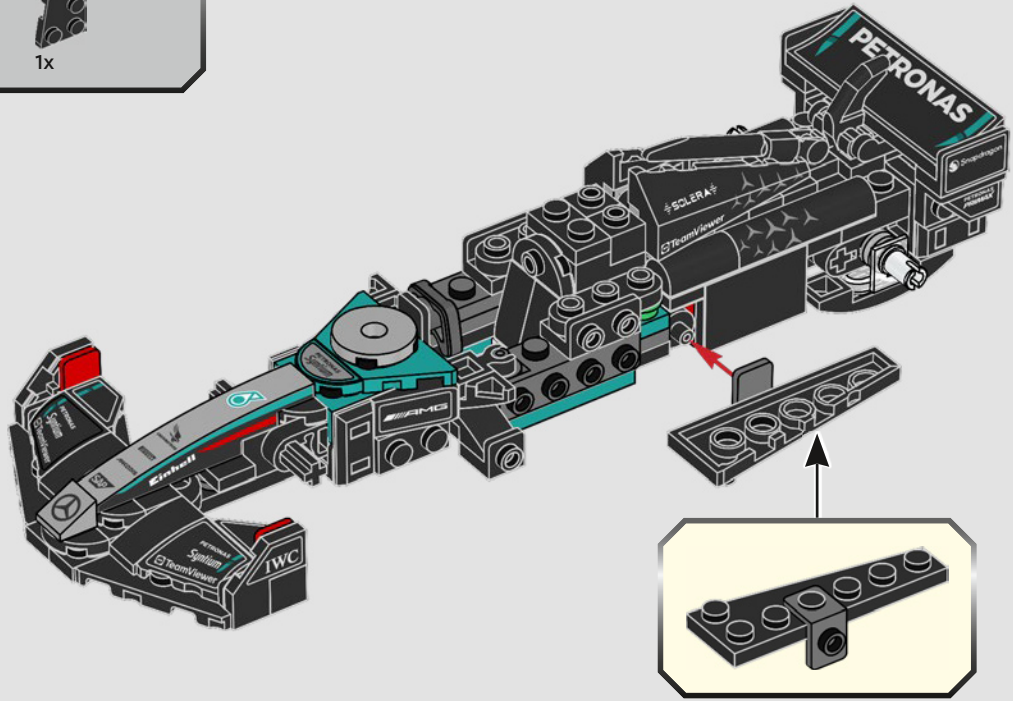
PETRONAS
SOLERA
TeamViewer
AMD
Shell
IWC
PETRONAS
Syntium
TeamViewer


1x
1x

73

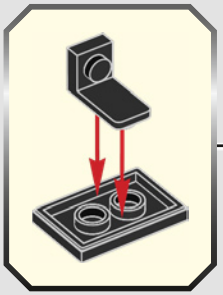

PETRONAS
SOLERA
TeamViewer
AMG
Einhell
PETRONAS
Syntium
TeamViewer
IWC

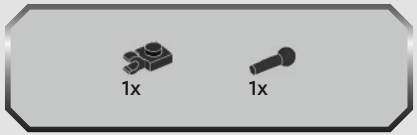

74

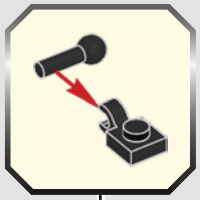

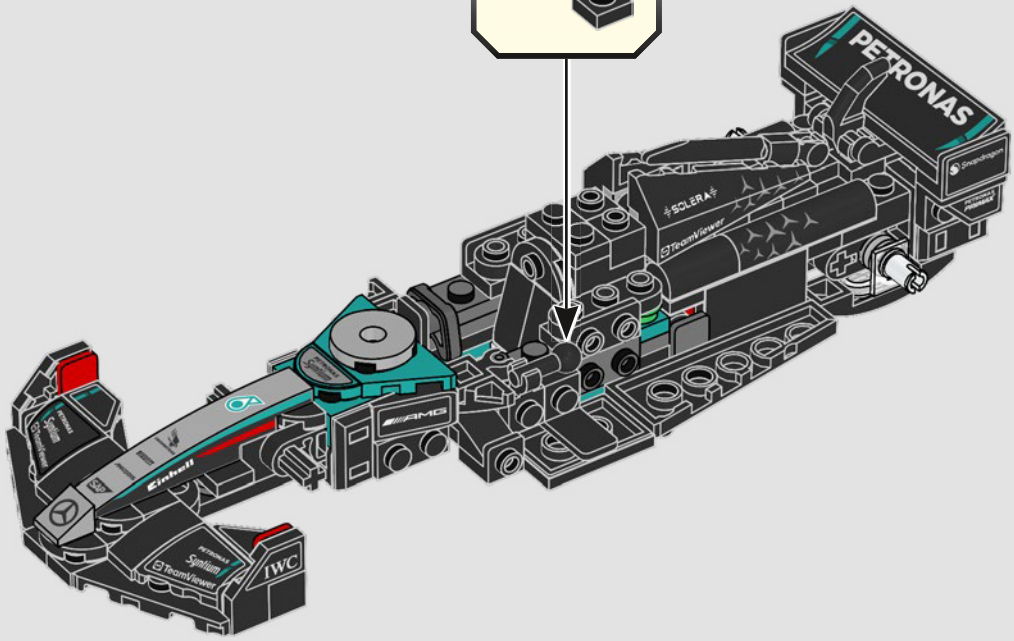

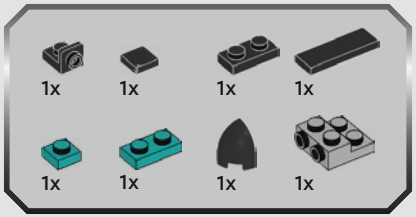

75

1 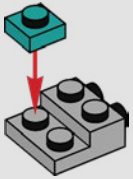

2 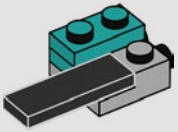

3 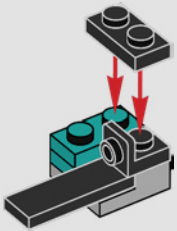

4 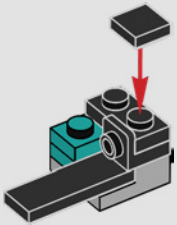

5 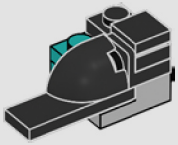

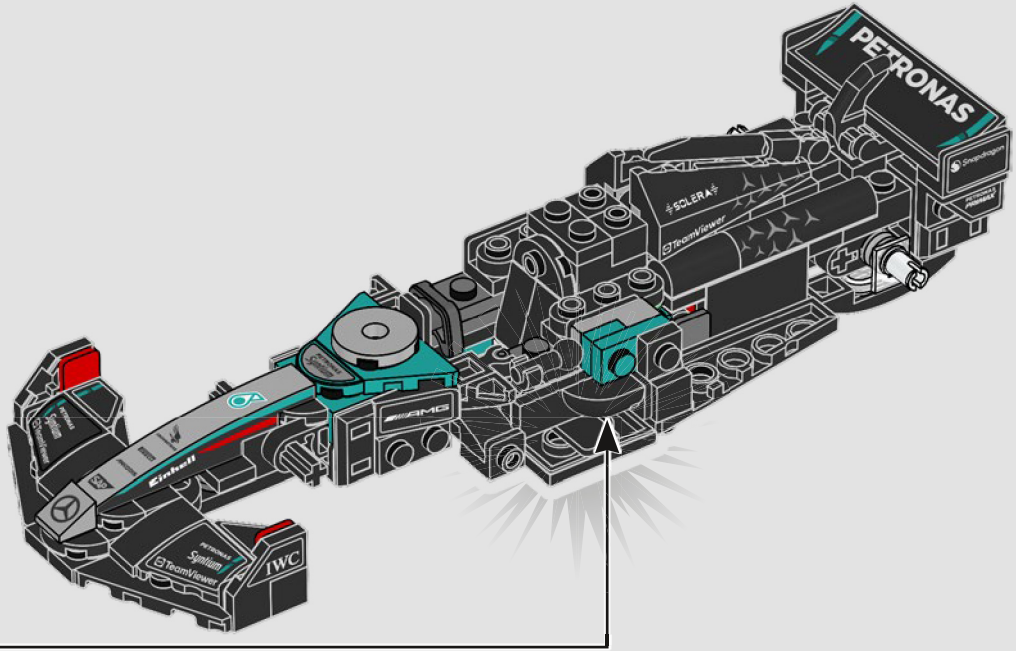
PETRONAS
SOLERA
TeamViewer
AMG
Einhell
Syntium
IWC

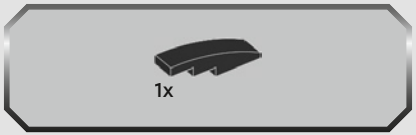
1x

76

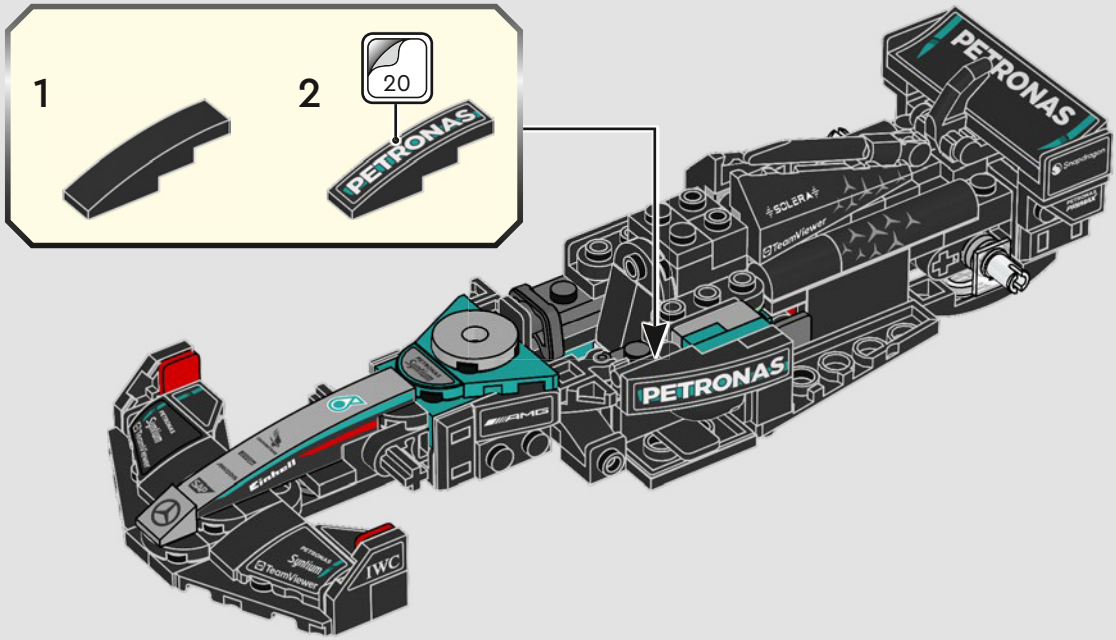
1
2
20
PETRONAS
PETRONAS
PETRONAS
SOLERA
TeamViewer
AMG
Einhell
PETRONAS
Syntium
TeamViewer
IWC

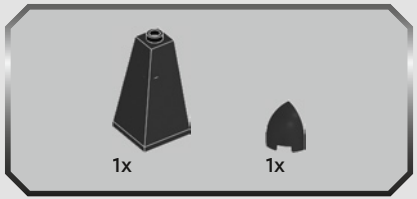

77

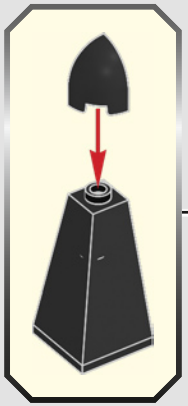

78

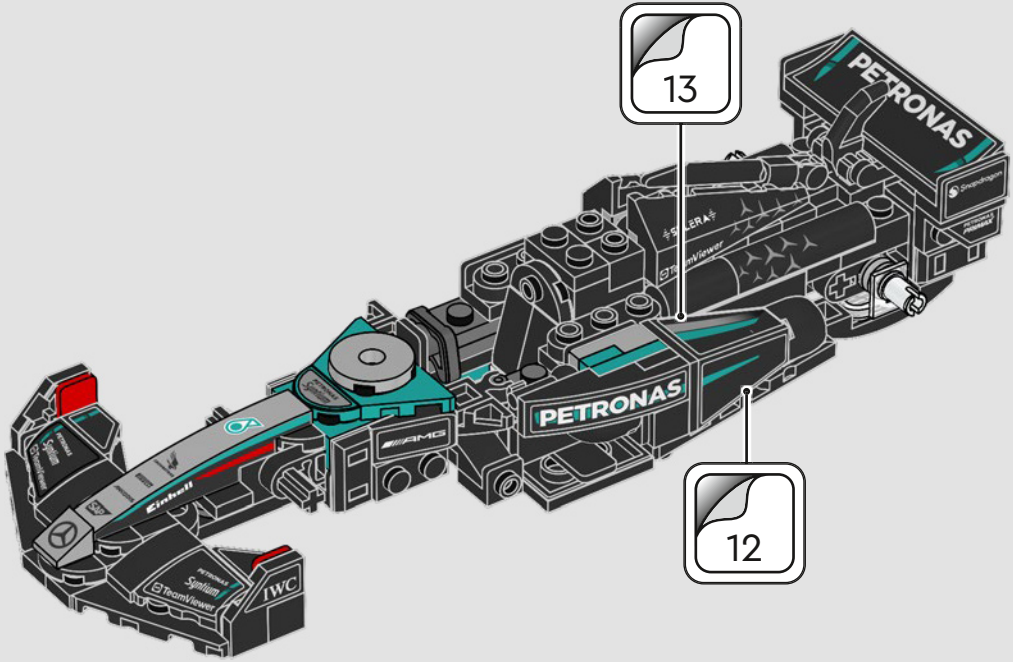



79

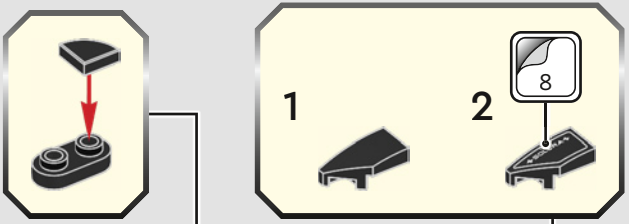

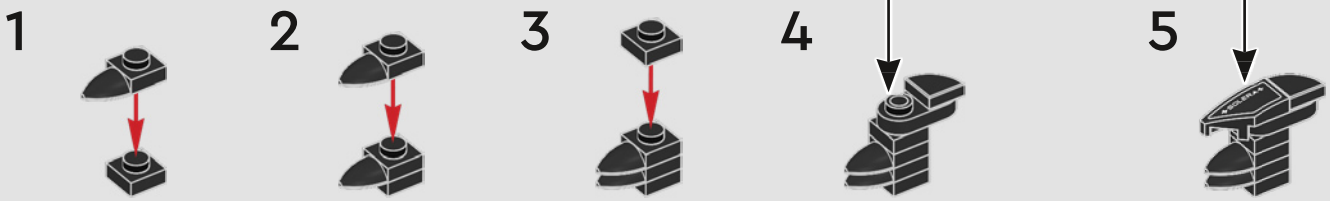

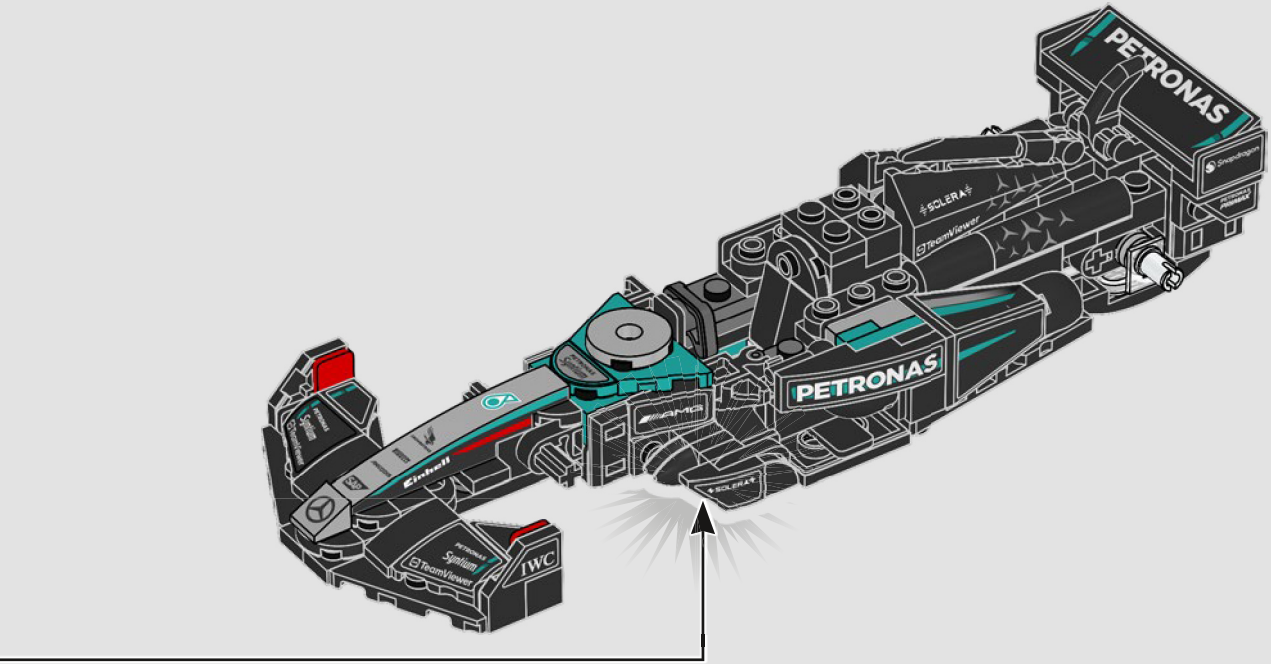
PETRONAS
SOLERA
TeamViewer
PETRONAS
Einhell
IWC
TeamViewer

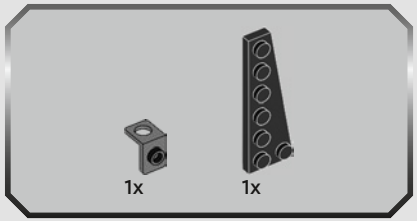

80



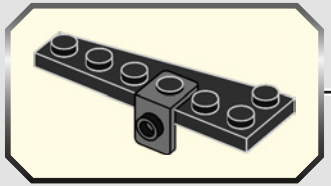

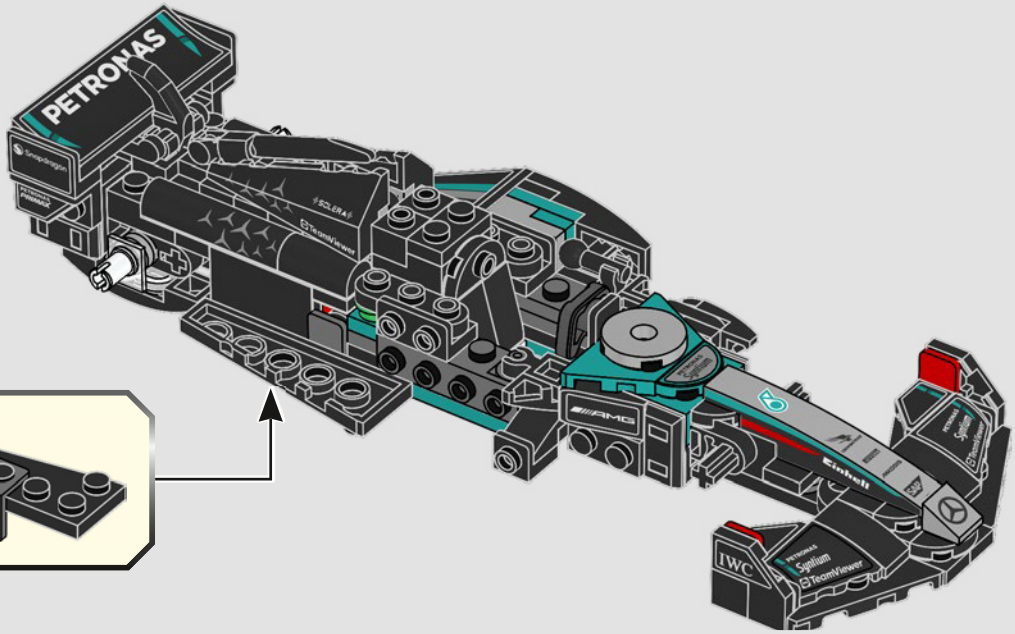


1x
1x

81

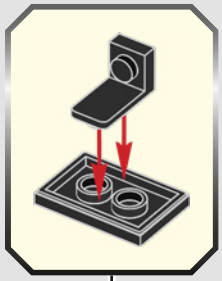

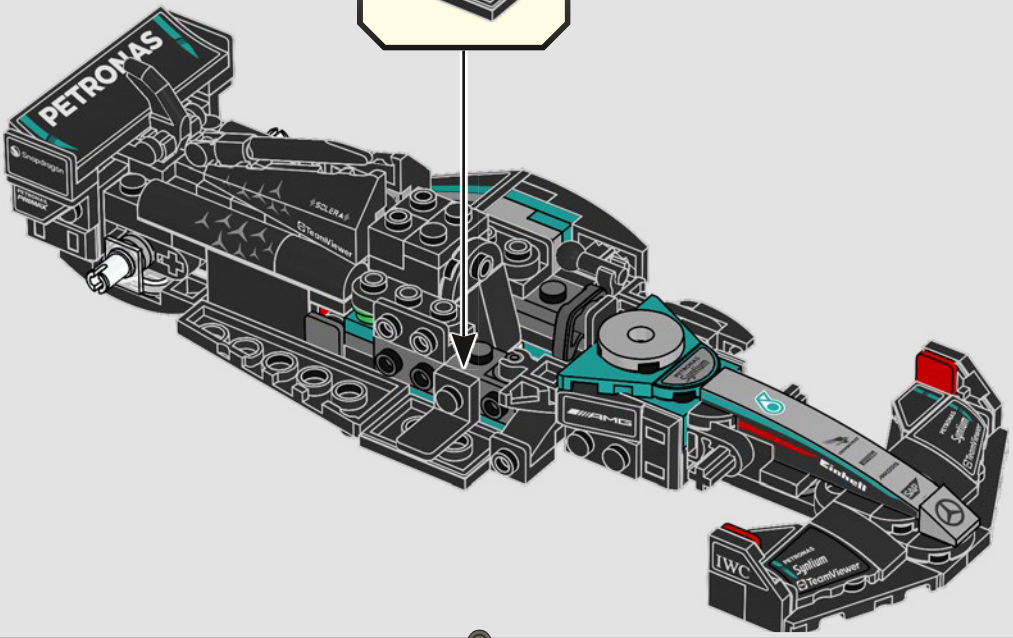
PETRONAS
Snapdragon
SOLERA
TeamViewer
AMG
Shell
IWC
Siglum
TecmViewer

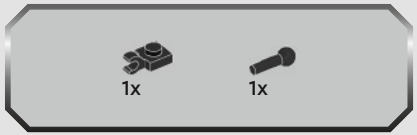

82

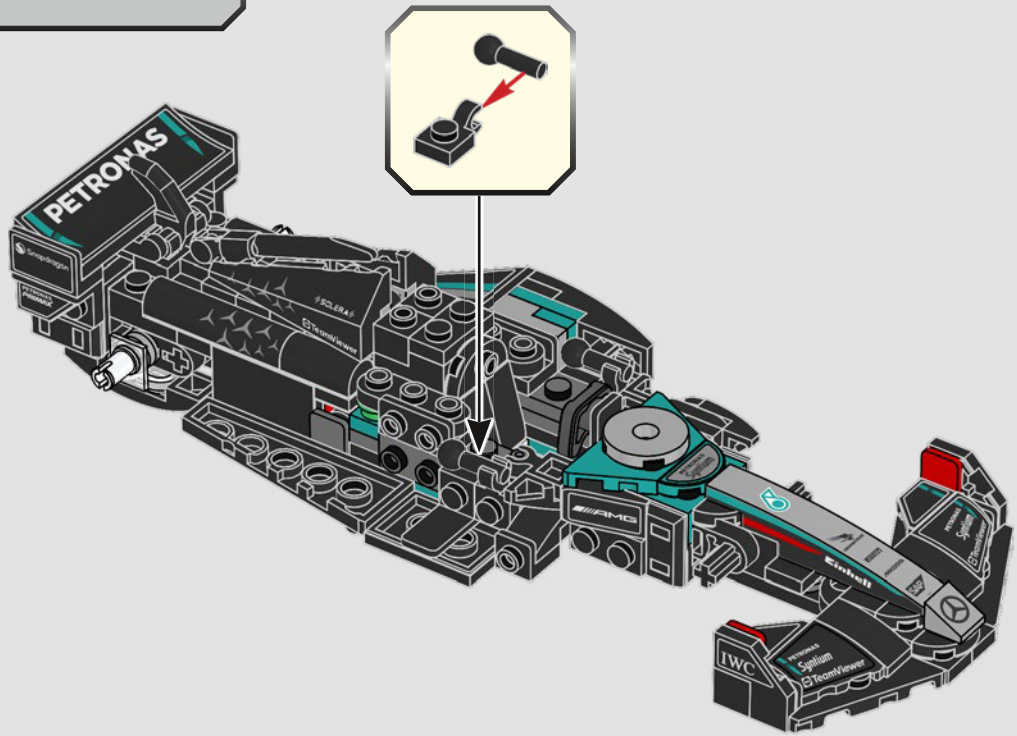

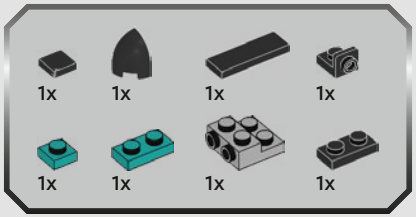

83

1

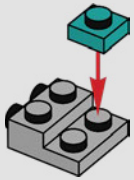

2

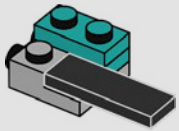

3

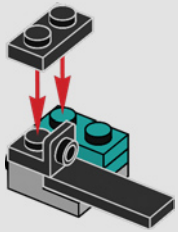

4

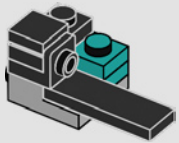

5

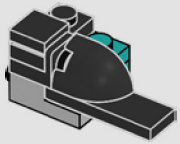

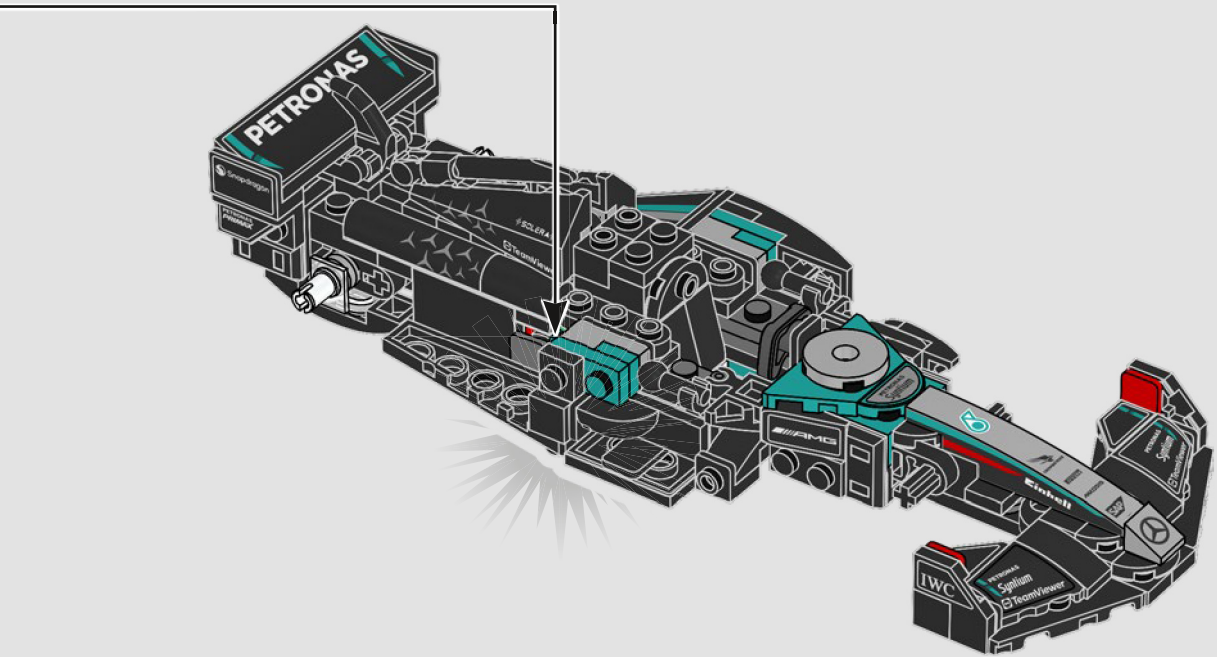
PETRONAS
AMG
Pirelli
IWC
Siplum
TeamViewer

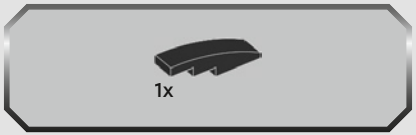
1x

84

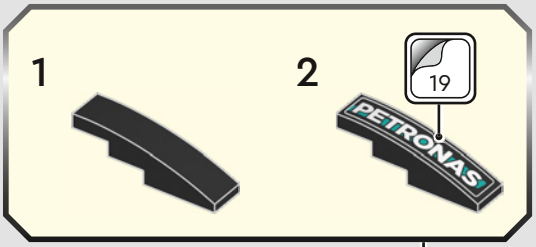
1
2
19
PETRONAS

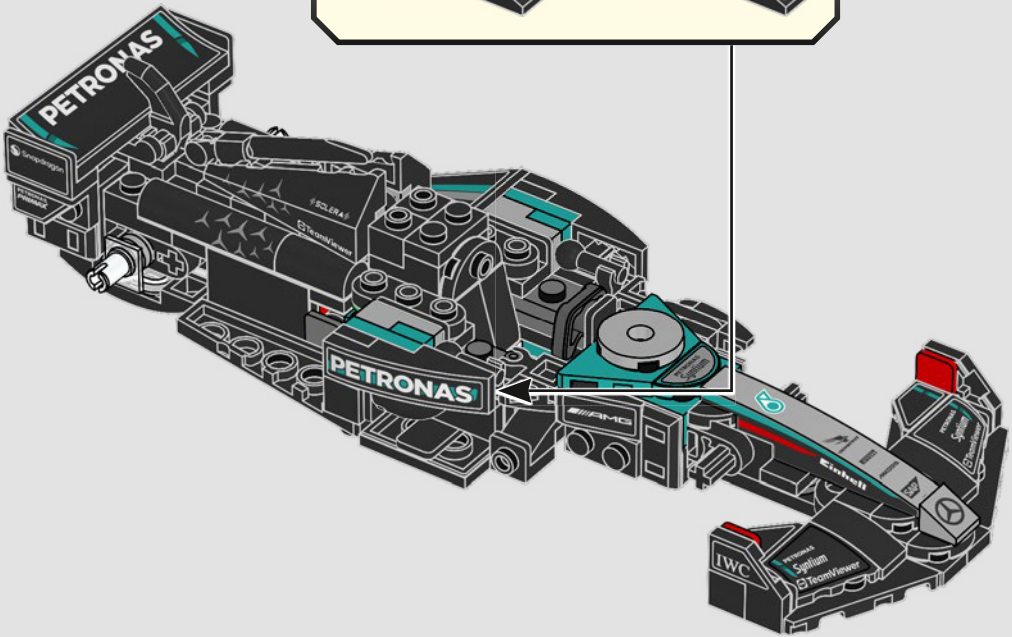
PETRONAS
PETRONAS
TeamViewer
AMG
Einhell
IWC
Siglum
TeamViewer

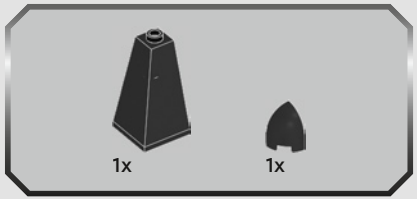
1x
1x

85

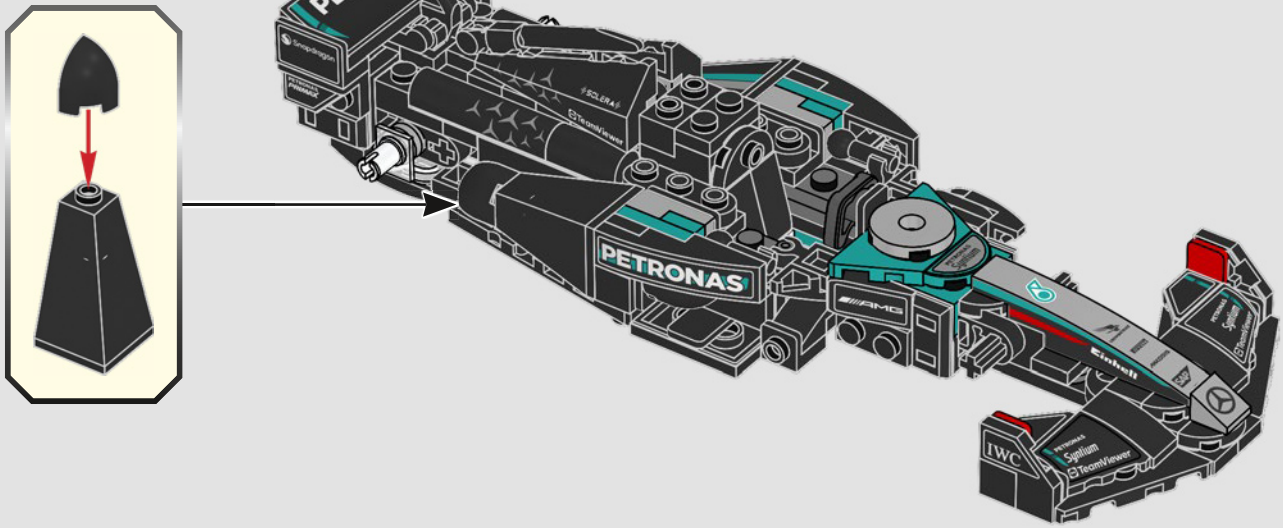
PETRONAS
PETRONAS
SCLERA
TeamViewer
AMG
Pirelli
IWC
Siemens
Siemens
PETRONAS
Siemens
TeamViewer

86

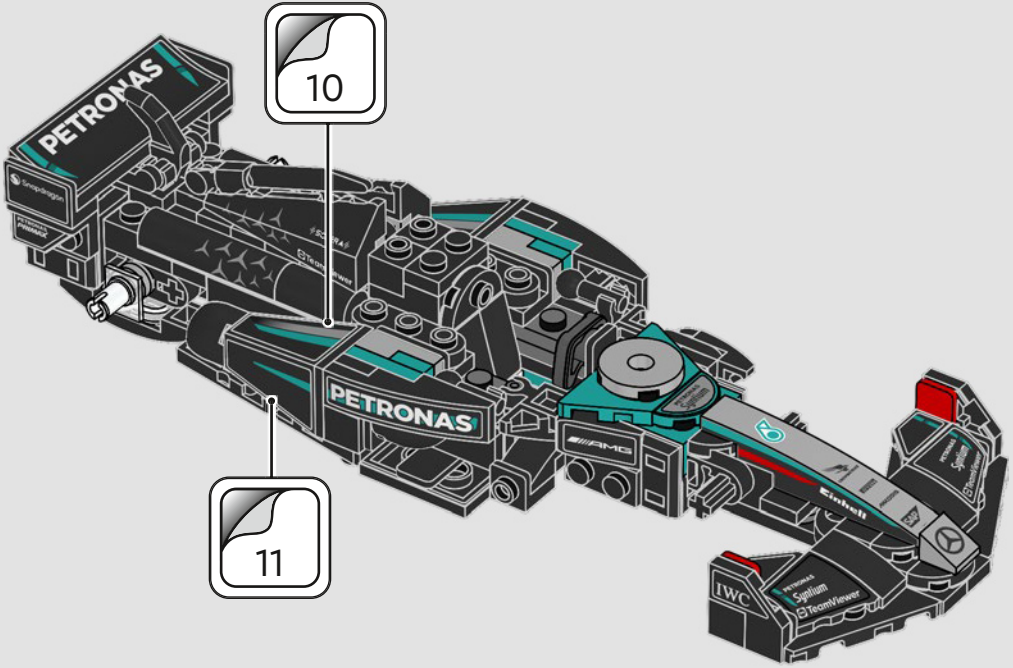



87

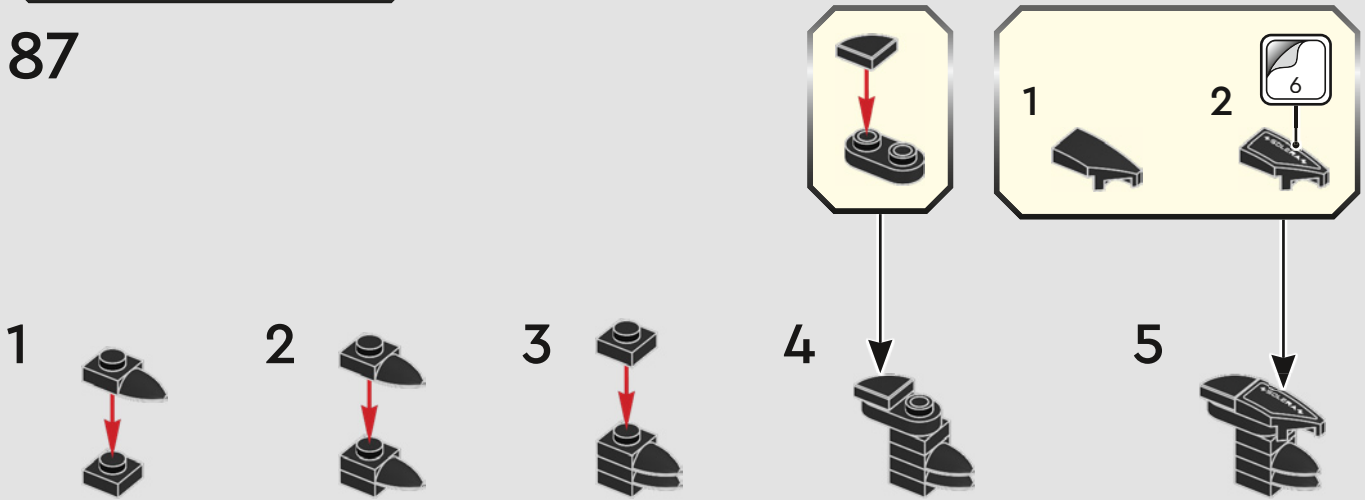

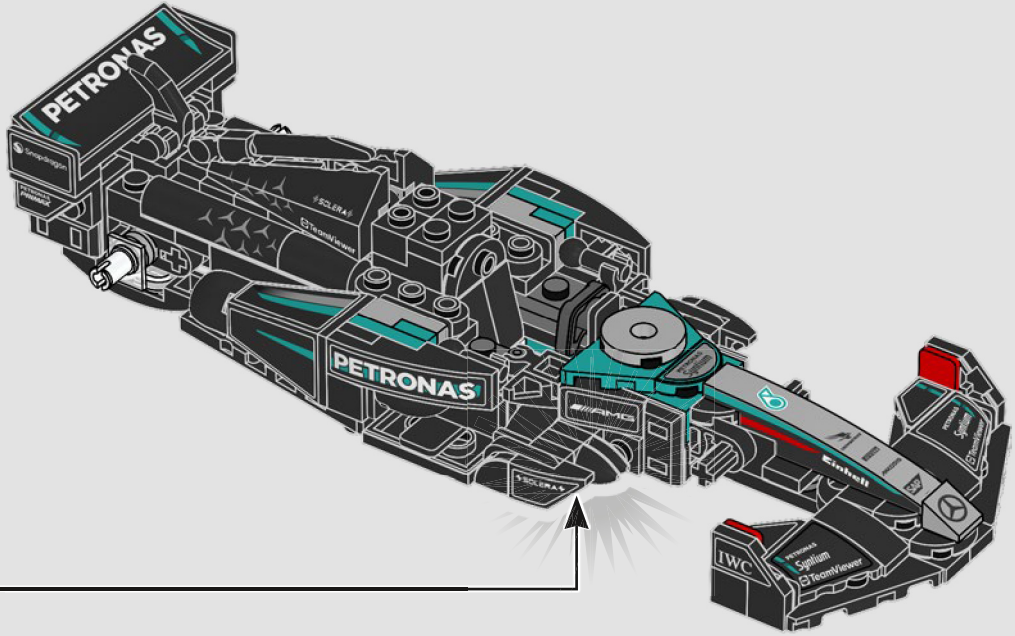
PETRONAS
PETRONAS
Einhell
IWC
TeamViewer


2x

88

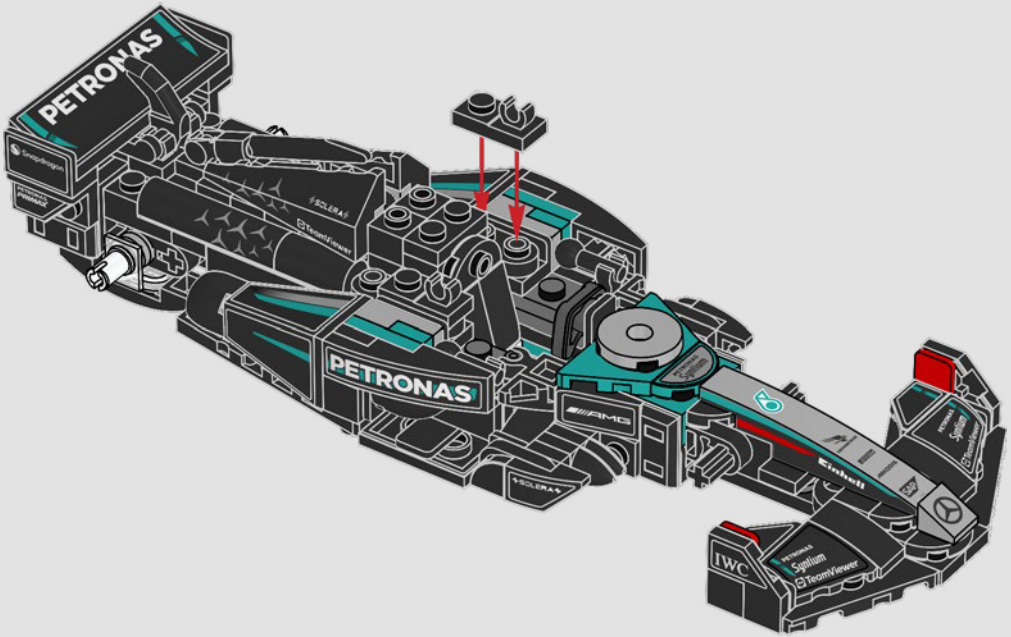
PETRONAS
PETRONAS
AMG
SOLERAS
TeamViewer
Shell
IWC
Siglium

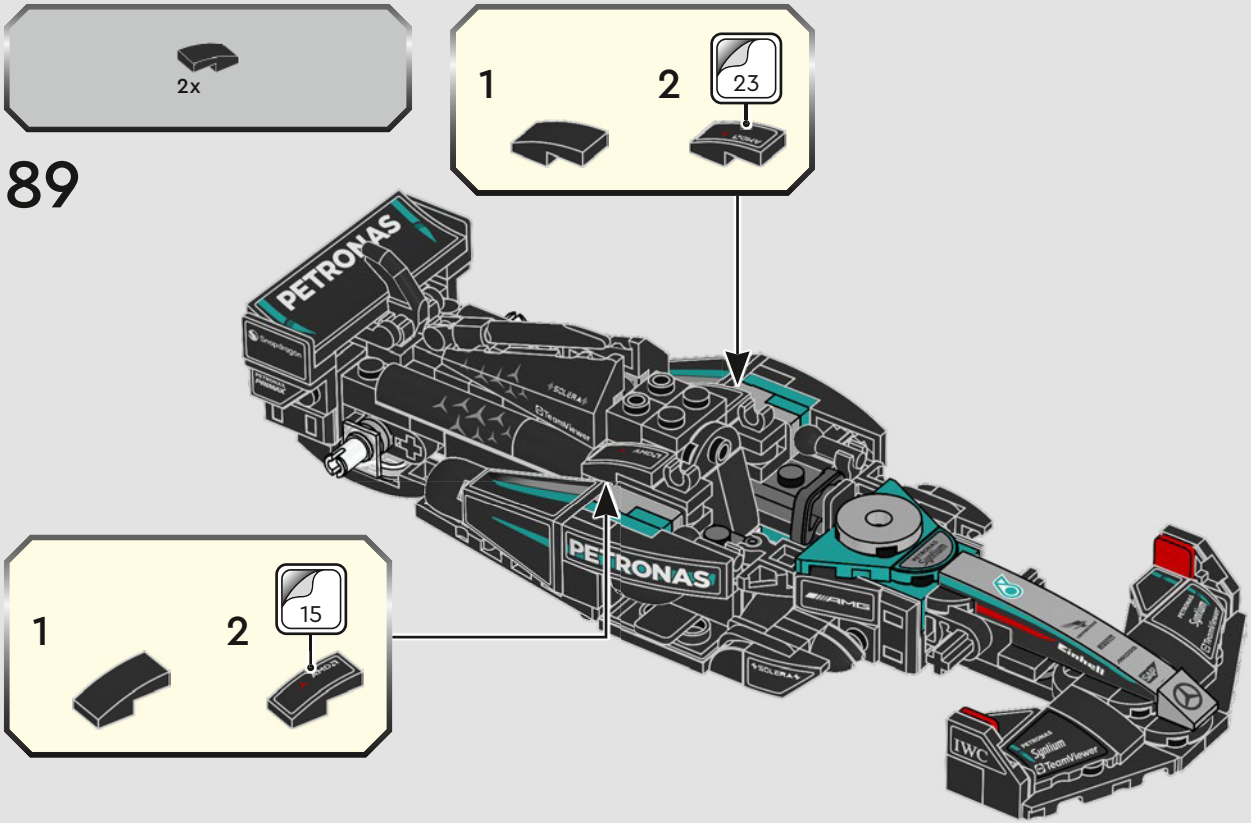
2x
89
1
2
23
1
2
15
PETRONAS
PETRONAS
SCLERA
AMD
AMG
Einhell
IWC
Sigalium
TeamViewer

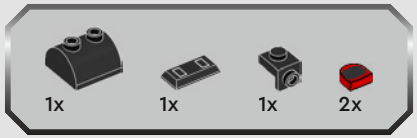

90

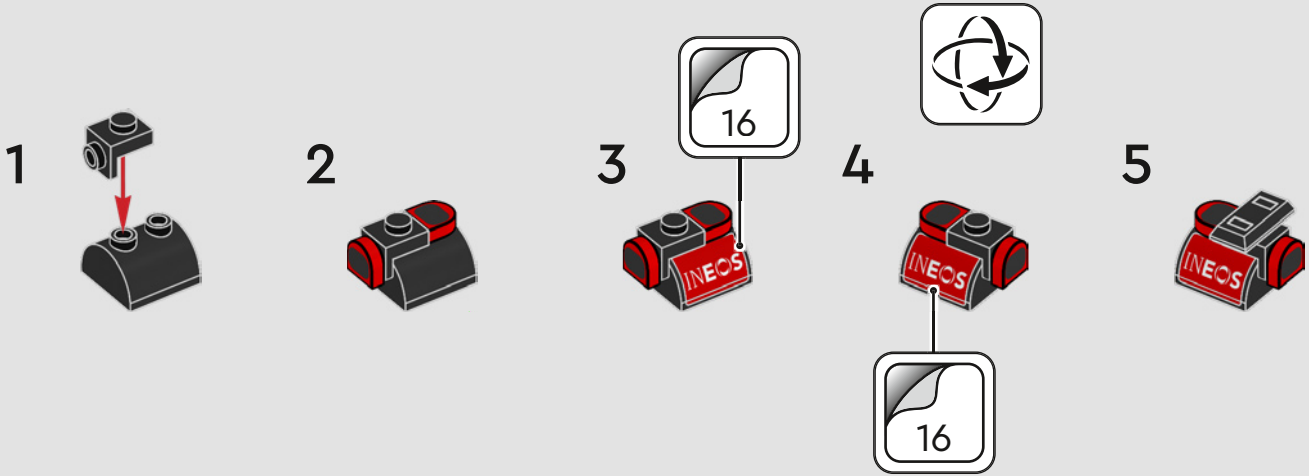

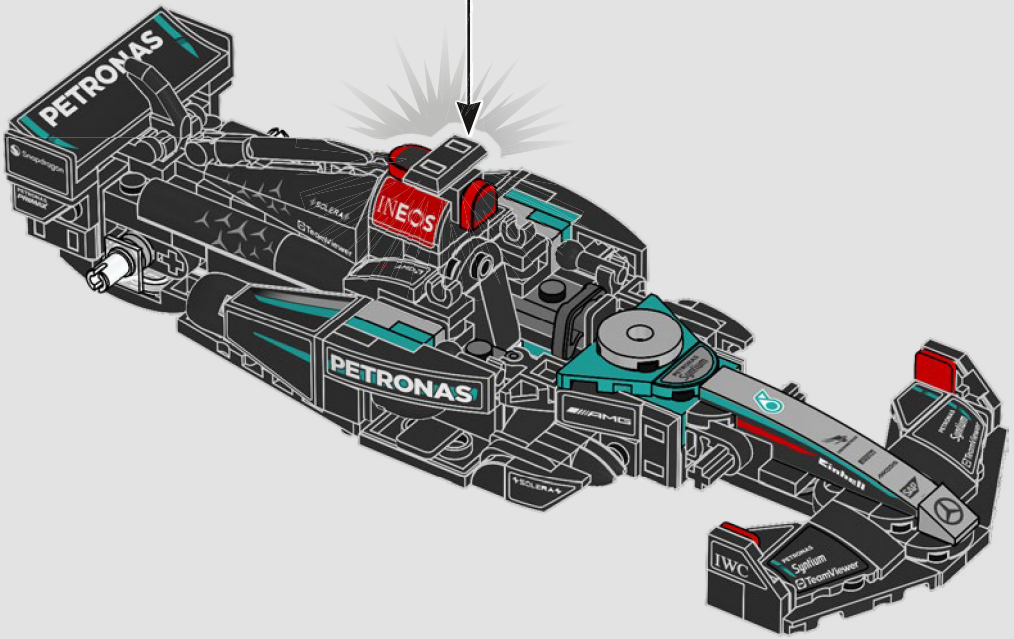
PETRONAS
INEOS
PETRONAS
AMG
Einhell
IWC
Sigalium
TeamViewer


2x
2x
2x

91

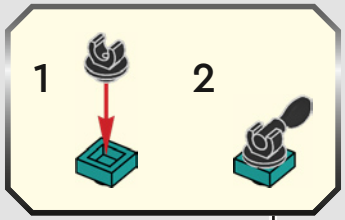
1
2

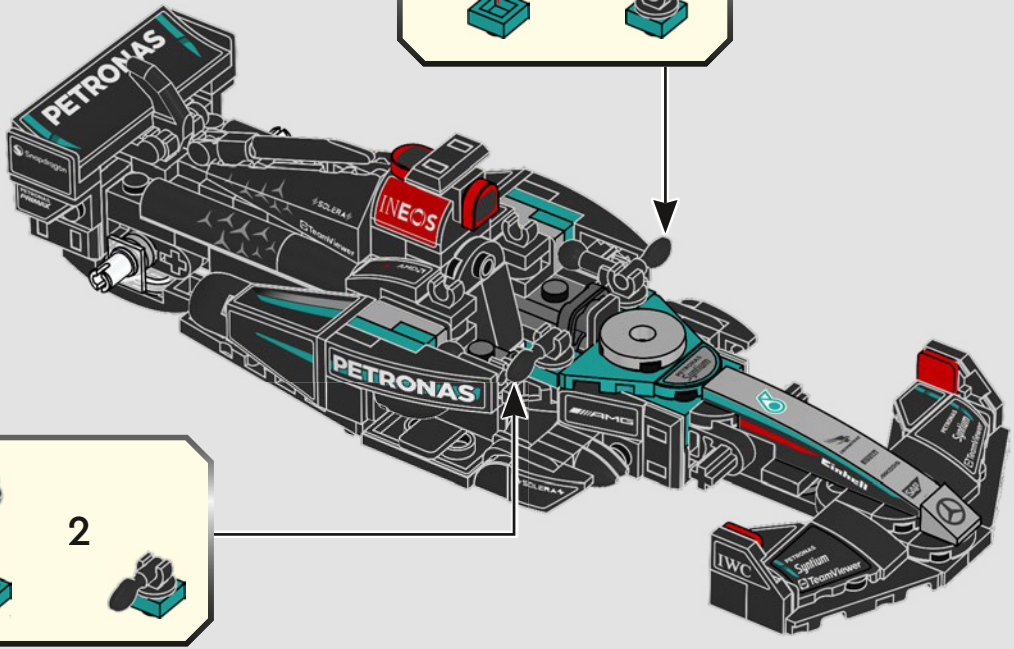
PETRONAS
INEOS
PETRONAS
AMG
Castrol
IWC
Siemens
TeamViewer

1
2


2x

92

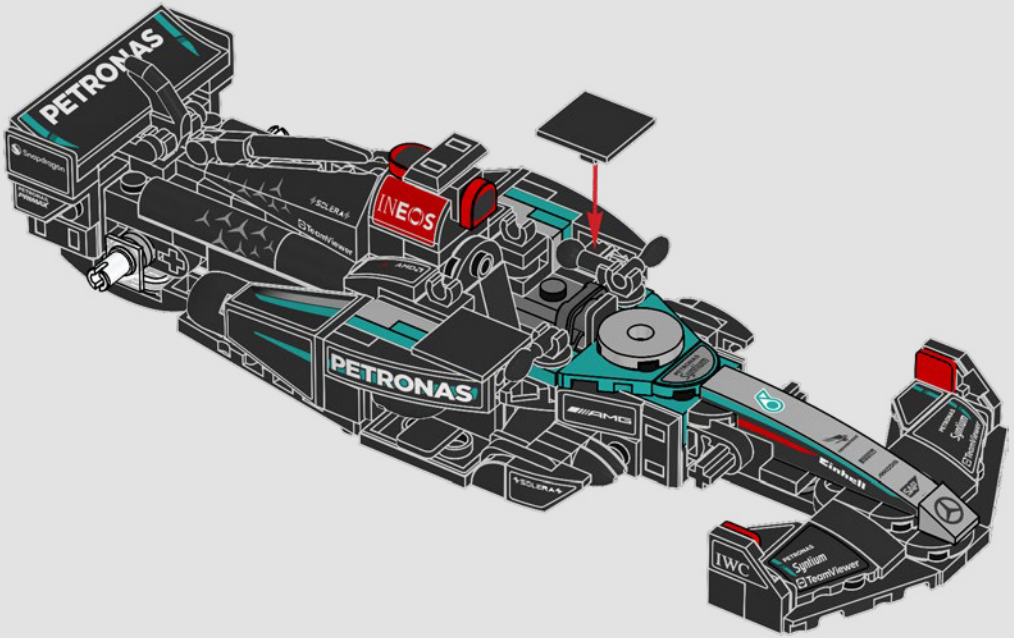
PETRONAS
INEOS
PETRONAS
AMD
Einhell
IWC
Sigilium
TecomViewer

93

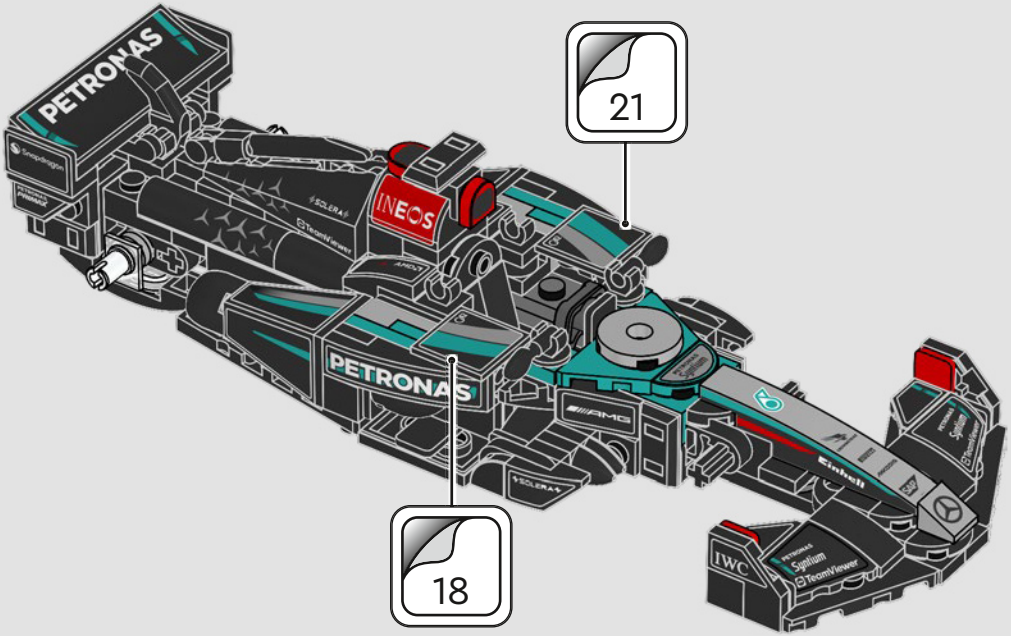

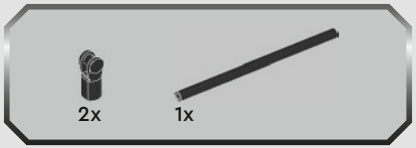

94

1



2



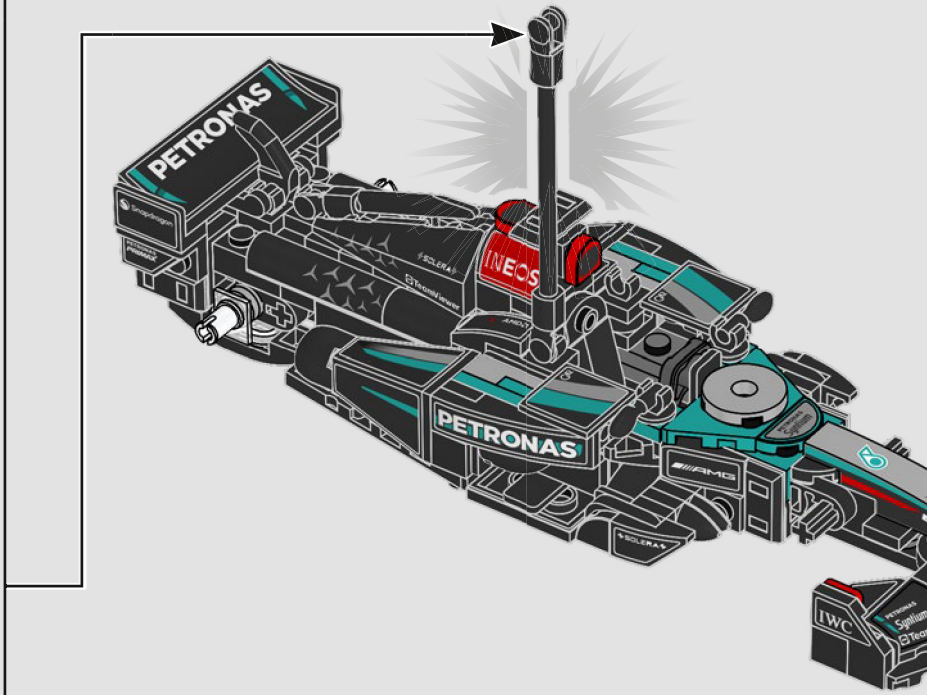

95

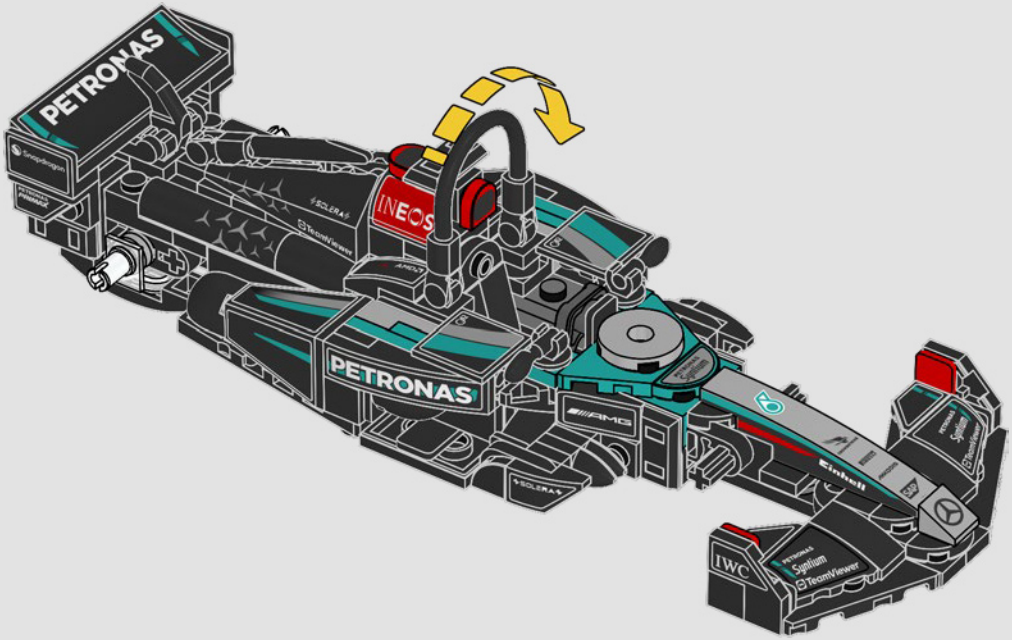

1x

96

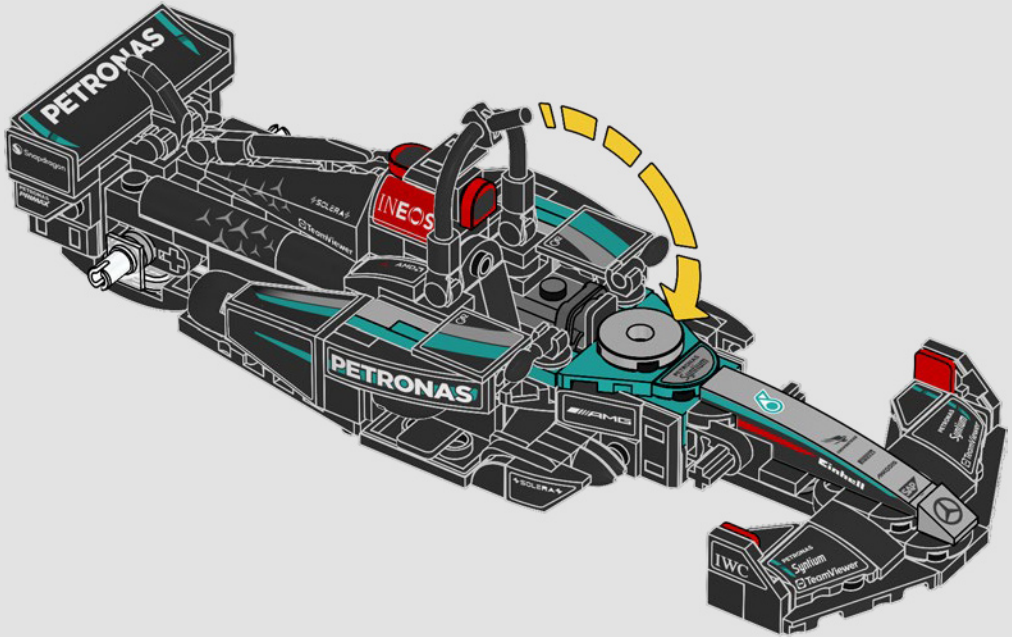
PETRONAS
INEOS
PETRONAS
TeamViewer
SOLERA
AMD
AMG
Einhell
IWC
Siglum


2x
2x

97

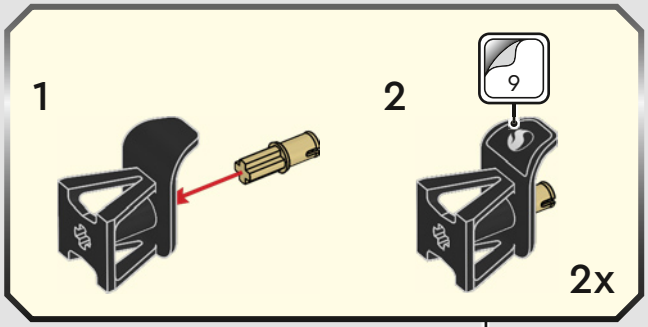
1
2
9
2x

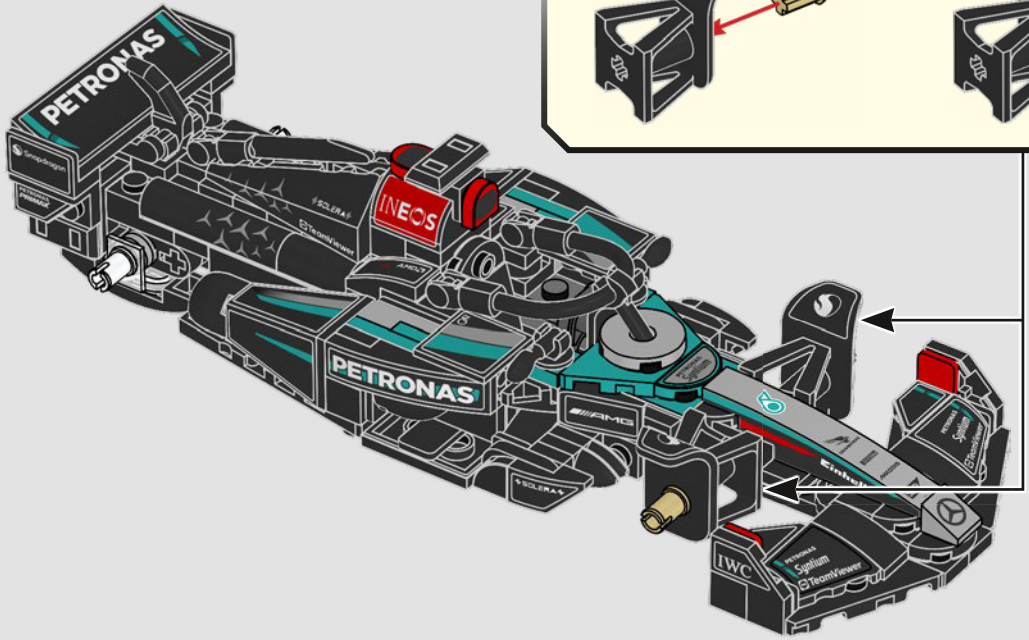
PETRONAS
INEOS
PETRONAS
AMG
IWC
Siemens
Siemens
TeamViewer





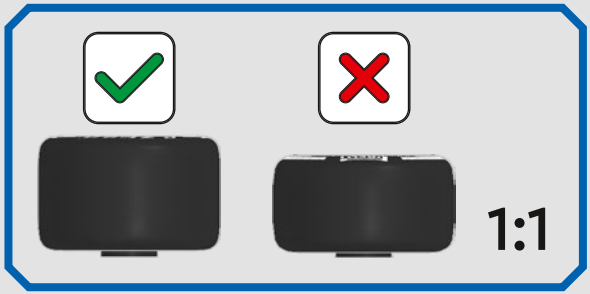

98

1



2



2x

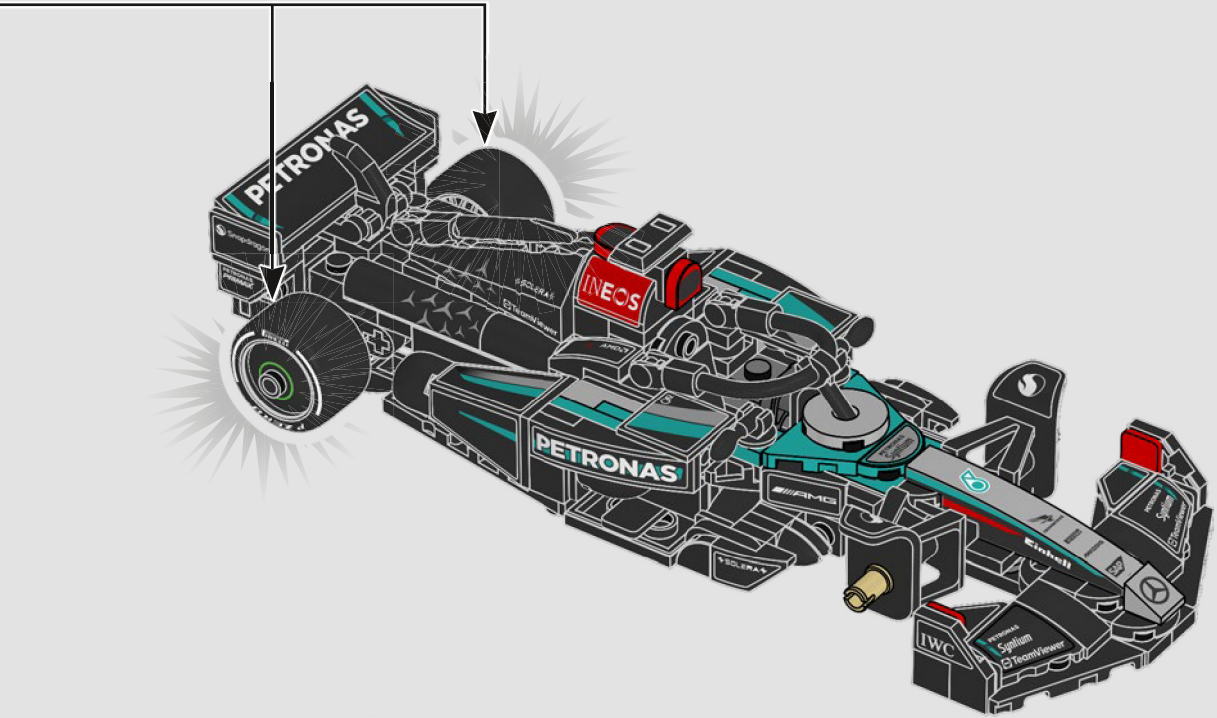
PETRONAS
INEOS
PETRONAS
AMD
Sipitium
TeamViewer
IWC


2x
2x

99


2x

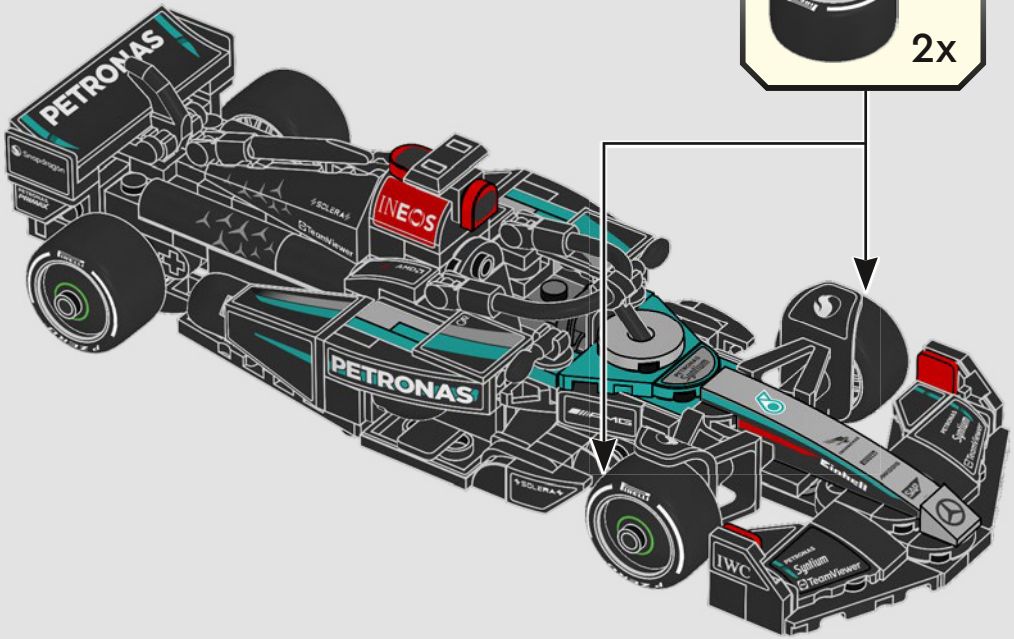
PETRONAS
INEOS
PETRONAS
Stobart
IWC
Sgnlium
TeamViewer

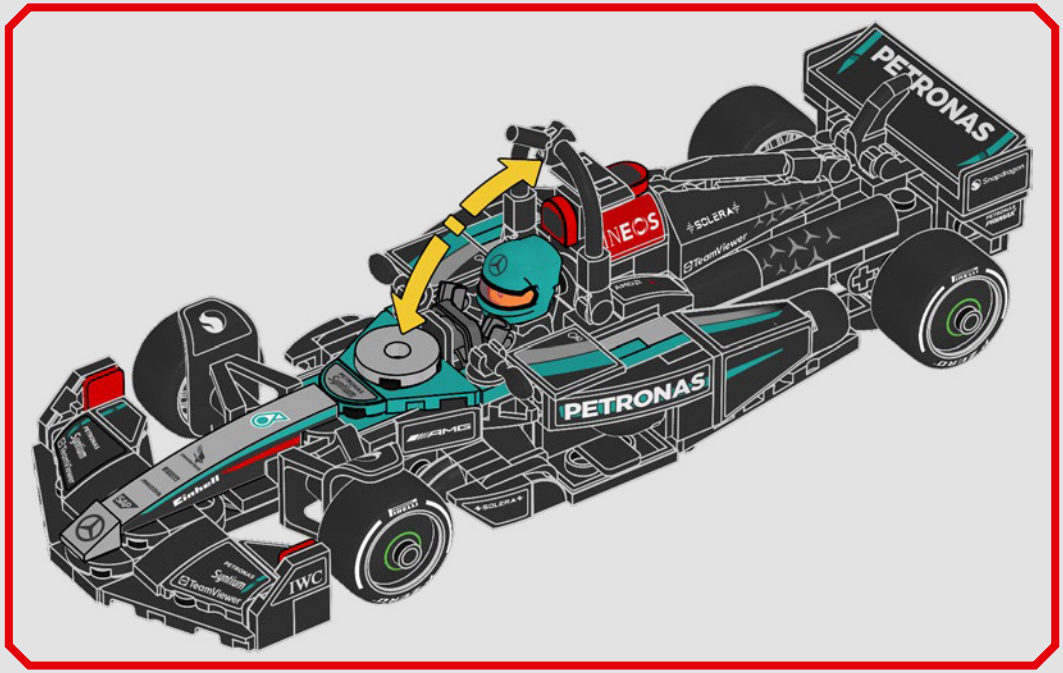
PETRONAS
INEOS
SCLERA
TeamViewer
PETRONAS
AMG
Eichelli
IWC
TeamViewer

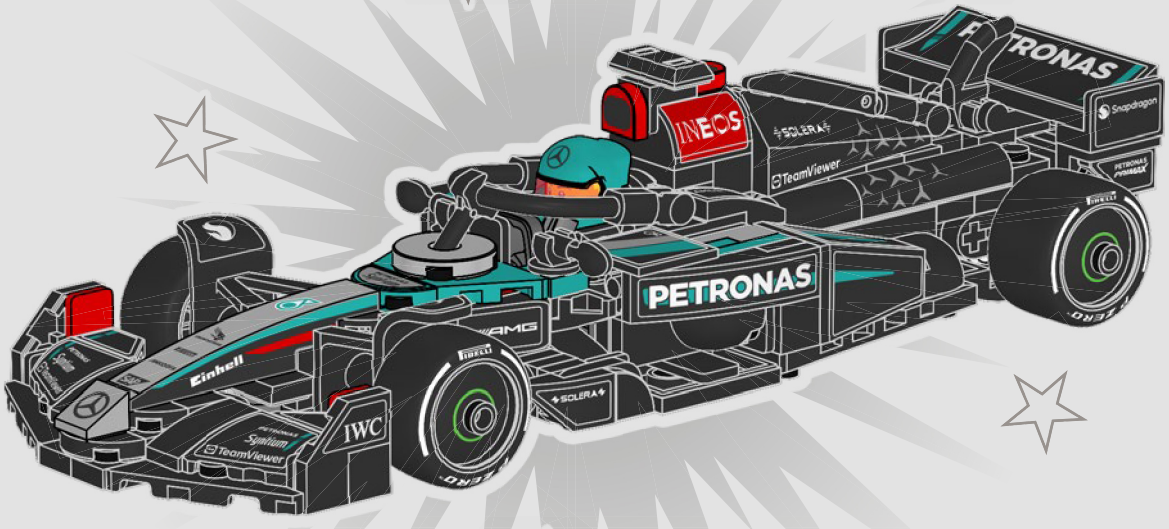
INEOS
SOLERA
TeamViewer
PETRONAS
Snapdragon
PETRONAS
Einhell
AMG
PIRELLI
SOLERA
IWC
PETRONAS
Syntium
TeamViewer

LEGO SPEED CHAMPIONS

77244



77242



77251



77245



The F1 logo, FORMULA 1, F1, GRAND PRIX and related marks are trademarks of Formula One Licensing BV, a Formula 1 company. All other trademarks, logos and copyrights, including those of the teams featured, are the property of their respective owners. All rights reserved.

OFFICIAL LICENSEE OF FORMULA 1®

Formula 1®

77248



77249



77247



77250




4x
6296132


1x
6218822


2x
6289797


1x
6535031


2x
4666579


2x
6539349


4x
6345637


3x
302321


1x
6001806


1x
6385920


1x
4651441


1x
6449540


2x
6475201


3x
6321194


2x
6186675


2x
6534180


1x
6439039


4x
6436425


4x
307026


2x
6172383


3x
6335388


1x
6539347


3x
6388352


2x
6181720


4x
302426


1x
6420198


3x
6335317


6x
6234695


1x
6299338


2x
6510139


1x
6338384


4x
4273590


2x
6509664


2x
6323189


1x
6141554


1x
6295295


4x
6510061


1x
6344427


1x
6141556


1x
6295293

2x
6308000

1x
6371584

4x
6338428

1x
6344428

2x
6210270

2x
6181713

2x
6330189

1x
6513908

4x
6539956

1x
6507846

2x
6510125

1x
9339

4x
6513918

7x
302326

2x
6347310

6x
6156991

9x
6092585

1x
6178922

6x
6047276

2x
6146220

2x
6472004

9x
6020193

2x
6000650

2x
6428168

1x
4225201

2x
6312358

1x
300326

1x
4200023

2x
6166859

2x
6192346

3x
6469445

2x
6508991

2x
4558170

1x
6517676

1x
6533562

1x
400626

2x
6538248

1x
317626

2x
6538249

4x
6162892

2x
370526

4

2x
4613153

1x
6254045

2x
370126

1x
371026

2x
6037746

1x
6539351

1x
6539350

2x
6439175

1x
6540677

1x
6540676

1x
6429334

1x
6508988

1x
4656764

2x
6166106

1x
6535196

4x
6213778

1x
6491440

6x
6213777

4x
6249418

3x
6249390

1x
6325430

2x
6350418

2x
6271165

1x
6539348

2x
6296894

1x
6179186

2x
6469440

1x
4244627

1x
6535197

8x
6338221

2x
6493340

1x
6092586

1x
4210633

3x
6271752

2x
6170811

1x
6472255

2x
6271127

1x
4211065

2x
6413109



YOU COULD

WIN

Scan this QR code or go to **LEGO.COM/PRODUCTFEEDBACK** and give us your short feedback about this LEGO® set for a chance to win a cool LEGO prize.

Terms and Conditions apply*



EN: YOU COULD WIN. Terms and Conditions apply* **DE: Du könntest GEWINNEN.** Es gelten die Teilnahmebedingungen* **FR: Tu pourrais GAGNER.** Des conditions s'appliquent* **IT: Potresti VINCERE tu.** Termini e condizioni sono applicabili* **ES: Puedes GANAR.** Aplican términos y condiciones* **PT: PODERÁ GANHAR.** Aplicam-se Termos e Condições* **ZH: 轻松获奖.** 条款和条件适用* **PL: Szansa na WYGRANĄ.** Obowiązuje regulamin* **CS: Máte šanci VYHRÁT.** Platí všeobecné smluvní podmínky* **SK: Máte šancu VYHRAŤ.** Platia všeobecné zmluvné podmienky* **HU: TE IS NYERHETSZ.** Felhasználási feltételek érvényesek* **UA: ВИ МОЖЕТЕ ВИГРАТИ.** Застосовуються загальні положення та умови* **RO: Ai putea CÂȘTIGA.** Se aplică termeni și condiții* **BG: Можете да СПЕЧЕЛИТЕ.** Има определени правила и условия* **LV: Tu vari LAIMĒT.** Ir spēkā noteikumi un nosacījumi.* **ET: Sul on võimalus VÕITA.** Kehtivad tingimused* **LT: Jūs galite LAIMĖTI.** Taikomos sąlygos*

**LEGO.com/productfeedback-terms*

LEGO and the LEGO logo are trademarks of the LEGO Group.
©2025 The LEGO Group.
Manufactured under licence from Mercedes-Benz Grand Prix Limited.

"AMG" and "Three Pointed Star in a Ring" are trademarks of Mercedes-Benz Group AG. All other logos featured on the Licensed Product are used with the permission of their respective owners all of whom reserve their respective rights in the same.
The F1 logo, FORMULA 1, F1, GRAND PRIX and related marks are trademarks of Formula One Licensing BV, a Formula 1 company. All rights reserved.
OFFICIAL LICENSEE OF FORMULA 1®