160 mm | 940 mm | 160 mm

160 mm

570 mm

160 mm

virtufit ROW100

virtufit ROW100

KG
HEAVY SIDE

VF20501

8 719325 459494

MADE IN CHINA

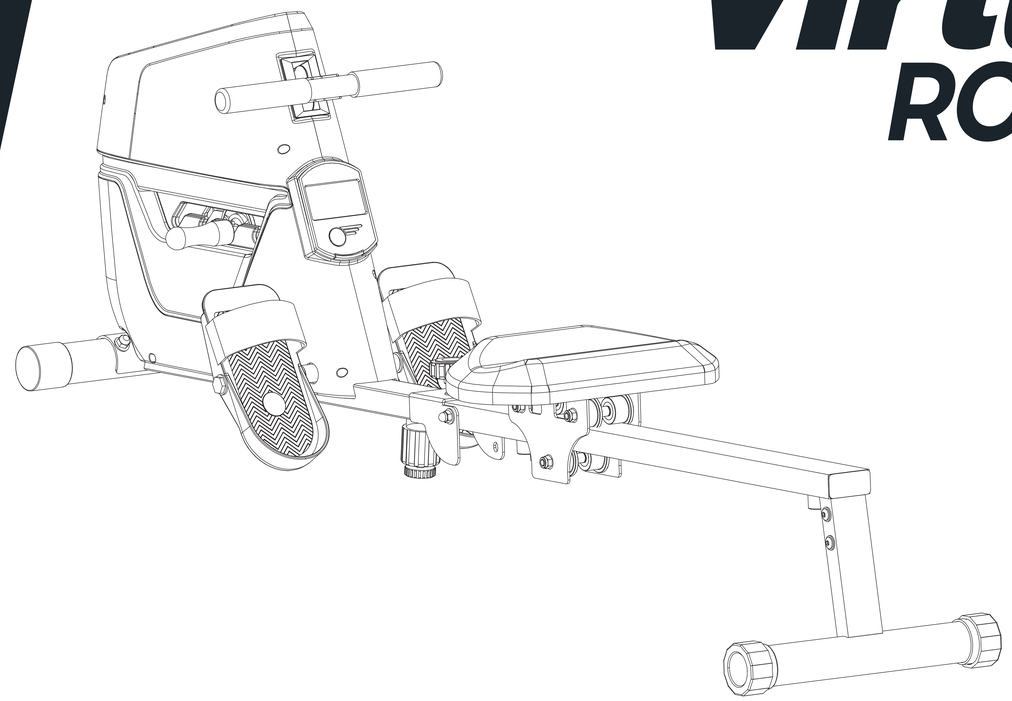

virtufit ROW100

ALWAYS CONSULT THE MANUAL

SCAN FOR SERVICE | ASSEMBLY VIDEO | TRAINING VIDEOS

virtufit ROW100

ITEM NO.	VF20501
QTY.	1 PC
N.W.	14.8 KG
G.W.	17.8 KG
MEAS.	94*16*57 CM

FRAGILE
HANDLE WITH CARE

Séparez les éléments avant de trier

THIS SIDE UP

FRAGILE
HANDLE WITH CARE

Séparez les éléments avant de trier

VF20101

8 719325 459494

MADE IN CHINA

virtufit
2JAN TIMBERCENSTRAAT 137
7559 SP HENGELO
THE NETHERLANDS
INFO@VIRTUFIT.NL

virtufit ROW100

virtufit ROW100

160 mm