DYNAMO SERIES



HON

CHAIRS

01 Check Various Accessories
Details of accessories

Please check and ensure all the things are in the package.
Please contact us for help if something is not included.

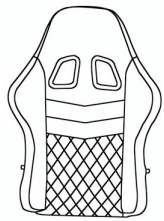

a x1

Back

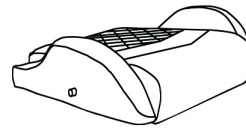

b x1

Seat

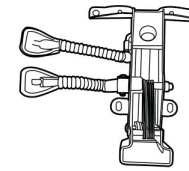

c x1

Mechanism

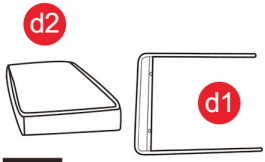

d x1

Footrest

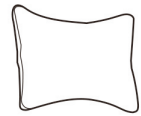

e x1

Headrest



f x5

Caster



g x1

Connector

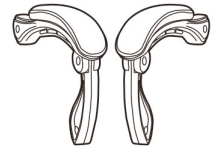

h x2

Armrest

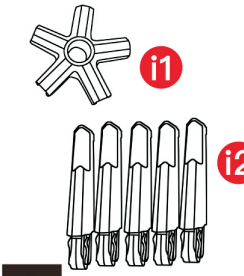

i x1

Base



j x1

Lumbar Pillow

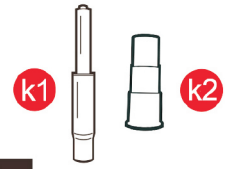

k x1

Gas Lift / Cover

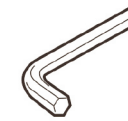

l x1

Wrench



S x2

Guide Rail



T x1

Remote Control

Screws and other accessories

m M6*20 Chair seat mechanism	4pcs	
n M5*10 Footrest d1	1pc	
o M6*25	10pcs	
p M8*35 Armrest Screws	4pcs	
r Cap Armrest	4pcs	
t M8*20 Connector	2pcs	

02 Instructions Before Using
Chair Installation

1 Combine **i1** and **i2**.

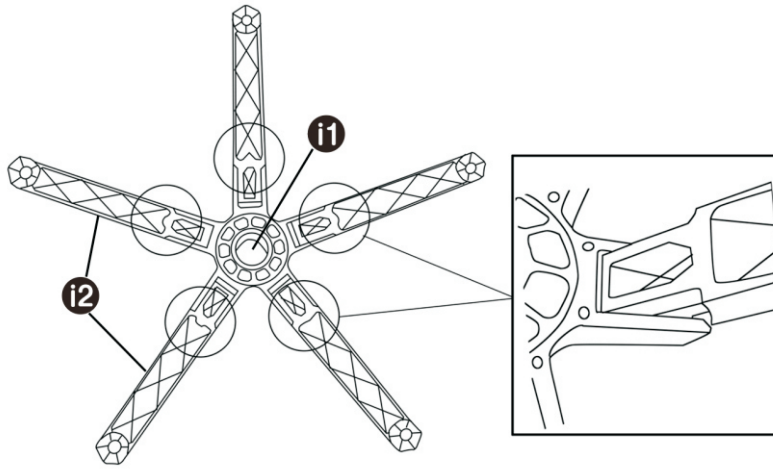

2 Insert the caster wheels into the bottom of the base as indicated in the image below.

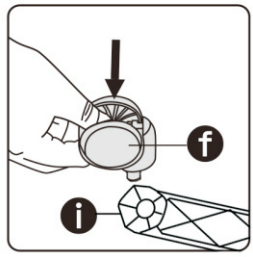

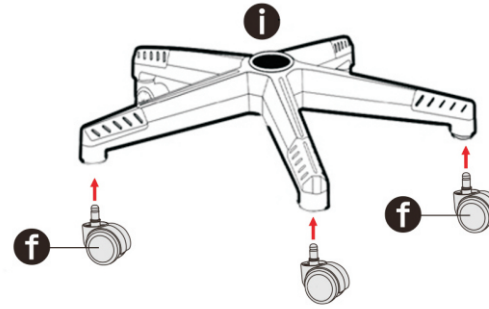

1.Insert the Gas Lift and Cover into the base as shown

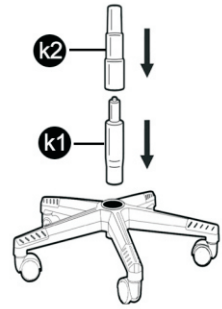

❸ Install the Guide Rail. Then, Install the Mechanism

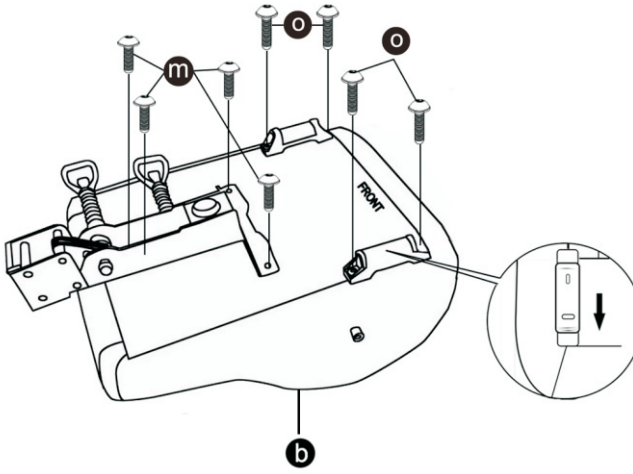

x4

Guide Rail

o M6*25

x4

Mechanism

m M6*20

⚠ Attention

DO NOT tighten the screws completely until they are all fixed in the correct position.

❹ Install the Footrest. Then, Install the Mechanism

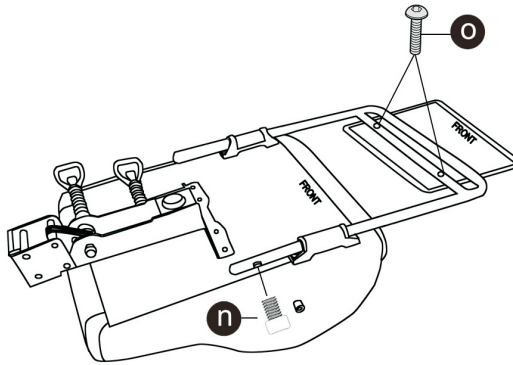



X2

o M6*25



X1

n M5*10

⚠ Attention

DO NOT tighten the screws completely until they are all fixed in the correct position.

❺ Place the seat on the gas lift.

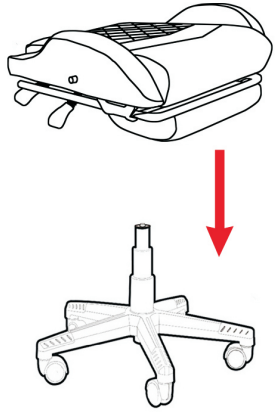

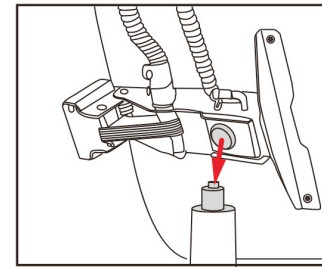

❻ Install the connector on the chair back.

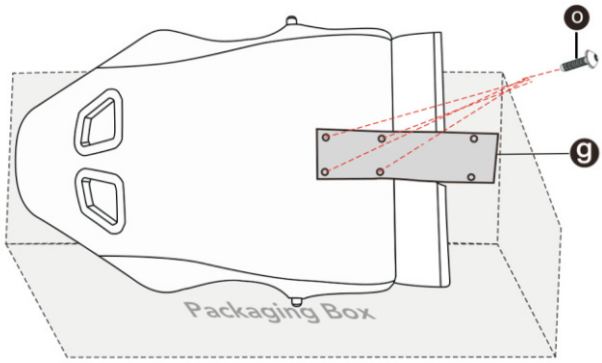

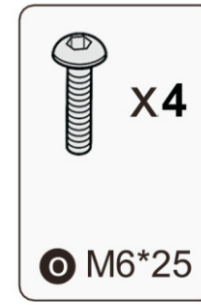

⚠ Attention

DO NOT tighten the screws completely until they are all fixed in the correct position.

❼ Attach the headrest and lumbar pillow to the backrest.

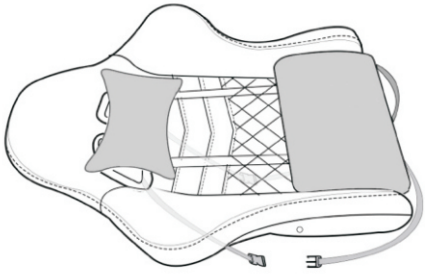

Install the lumber support and headrest as shown in the picture.
Pass the belt through the hole for vertical adjustment of lumber support.
When installing the headrest, please refer to the draw -ing and select a installation method that suits you.

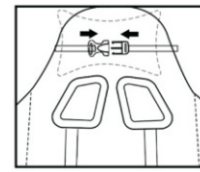

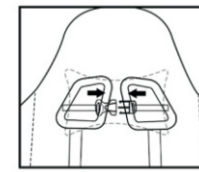

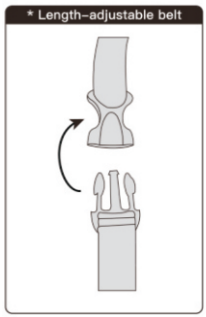

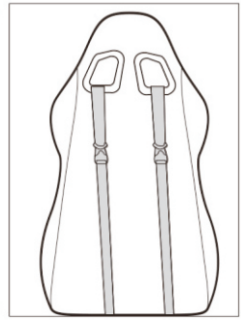

⑧ Install the connector into the rear end of mechanism.

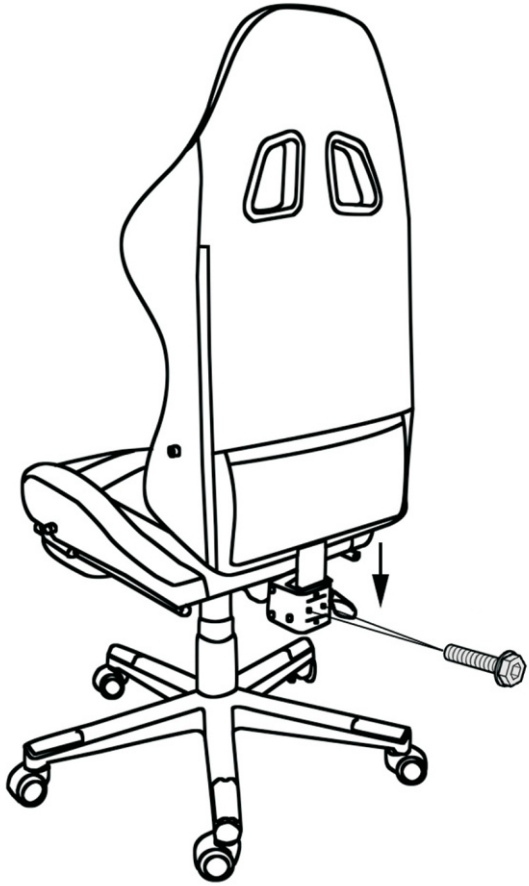

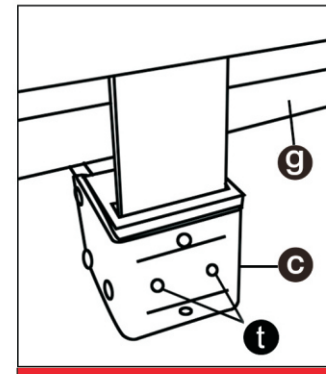

Note: Connector ⓖ INTO mechanism ⓒ.



X2

Connector

ⓣ M8*20

⚠ Attention

DO NOT tighten the screws completely until all the screws are fixed in the correct position.

9 Install the armrests. Then, install the caps.

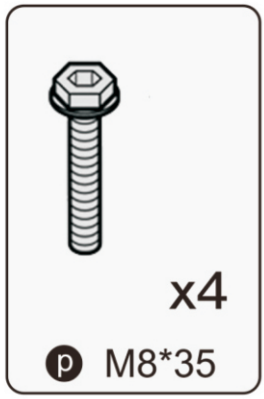

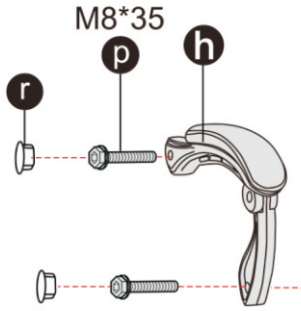

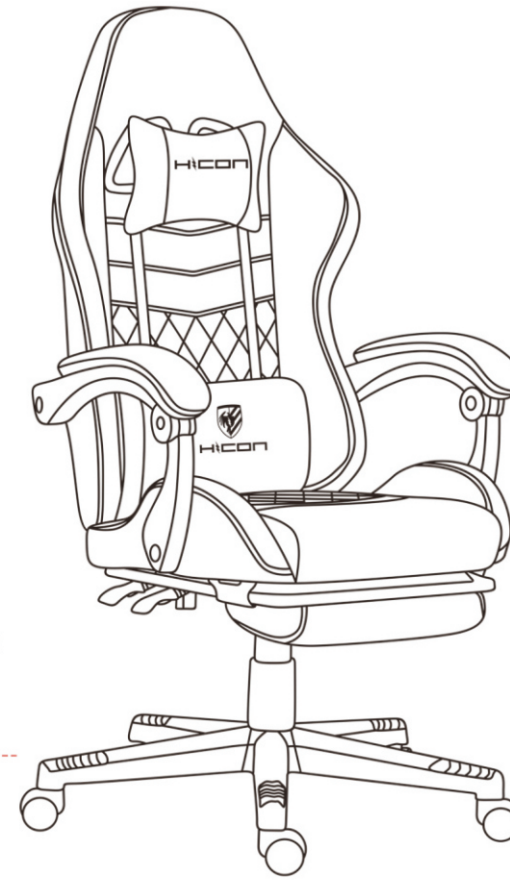

Attention

DO NOT tighten the screws completely until all the screws are fixed in the correct position.

A Massage Function

Connect the RGB cable between the backrest and the seat.

The USB port needs to be connected to a power source. Then, by press the remote control to operate.

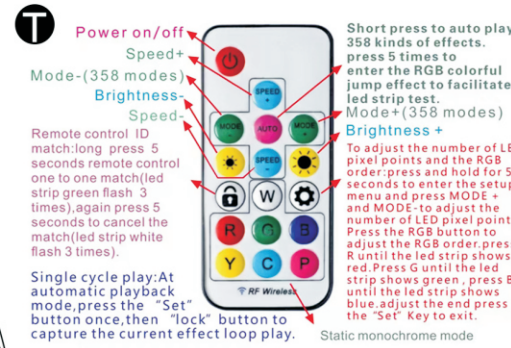

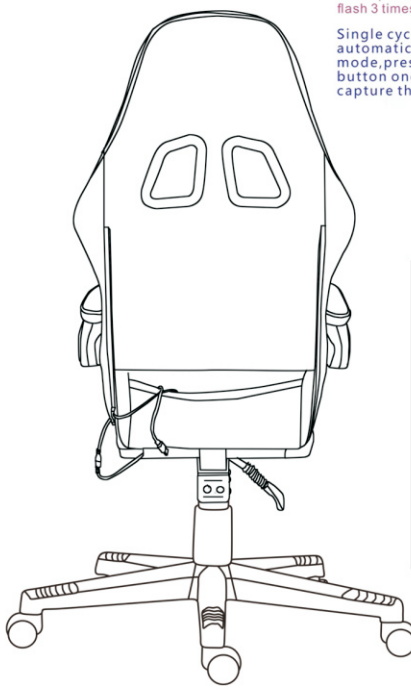

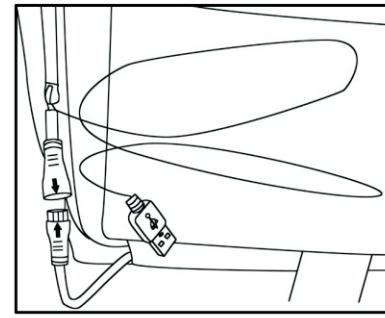

B Back Recline Function

Pull up on“RCL”lever and the back angle tilts independently with user’s motion. Push down on“RCL”lever and the back angle is locked in position. Rest on the back when resetting back to its normal position, otherwise the back may reboud rapidly.

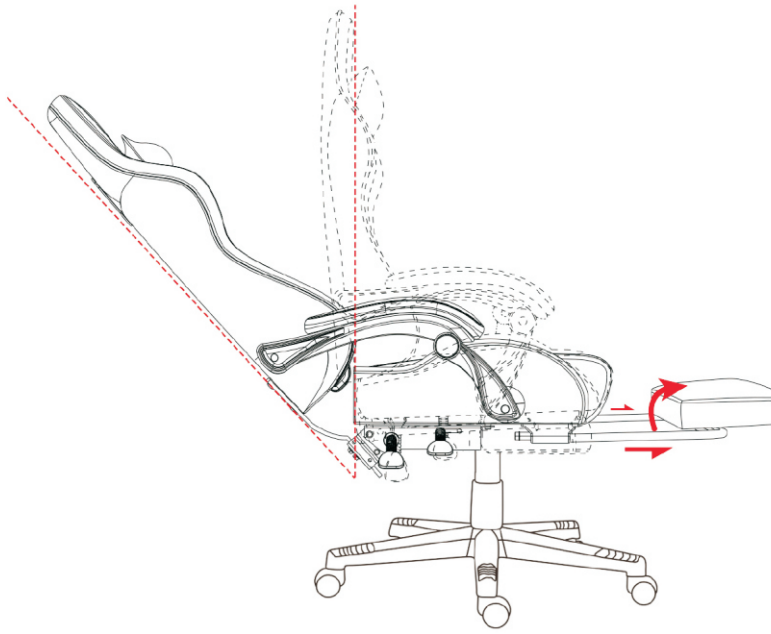

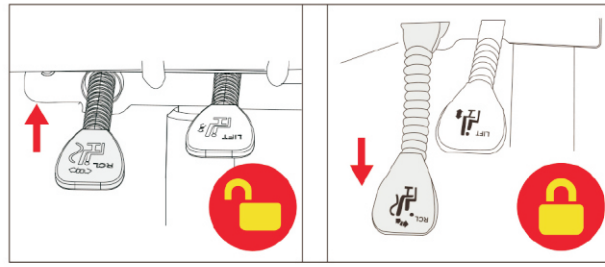



HICON

CHAIRS