creavit belgium

aloni BATHROOM IDEAS

Product Code **CR1162**
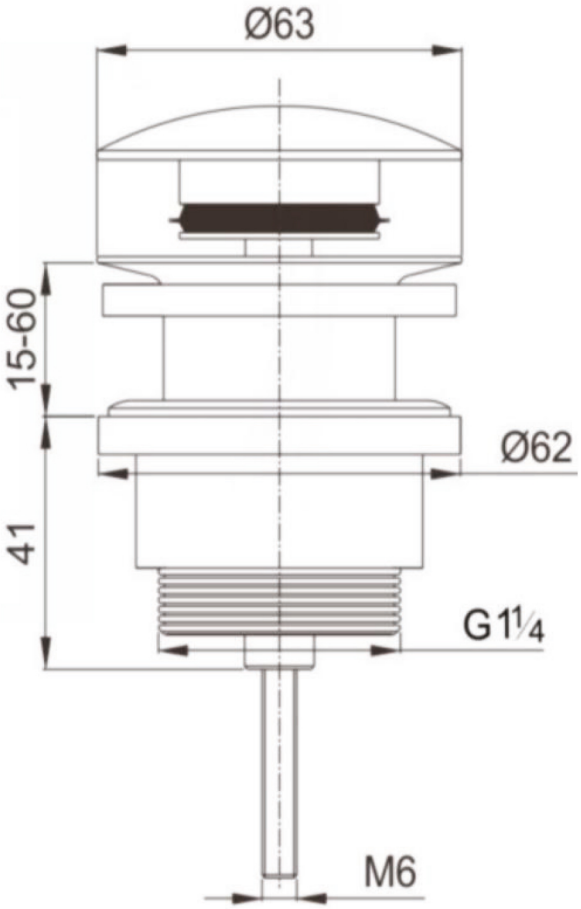
TECHNICAL DRAWING