Product name: Multi-screen Gas Arm

Model No.: 80935

Product Features

- Easy to adjust the monitor angle and position to satisfy the different view.
- Use the gas cylinder adjust design, make free up&down movement for the monitors.
- Save the space of desktop in suspending 4 monitors in one arm.

Technical parameter

LCD Size	Wt.Capacity(kg)	Lift(mm)	Tilt	Swivel	Pivot	VESA	Packing size(mm)	NW (kg)	GW(kg)	Desk thickness application (mm) Thru desk	desk clamp
≤24"	2-10 9-21	340	+75° ~ -45°	±90°	±90°	75*75 100*100	860*350*100	10.3	11.5	30	80

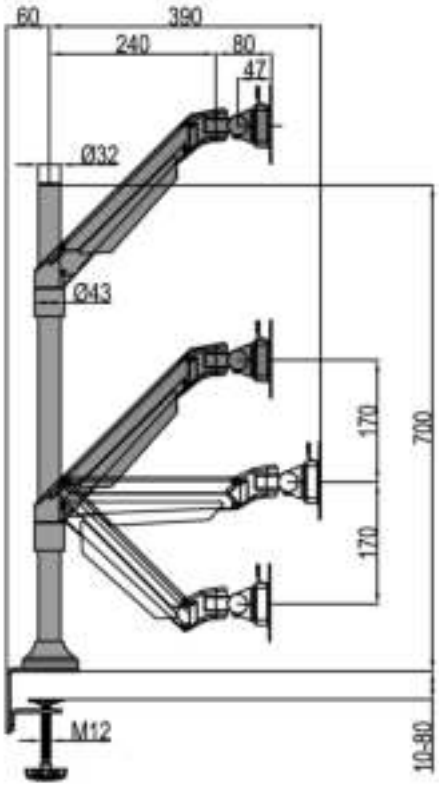

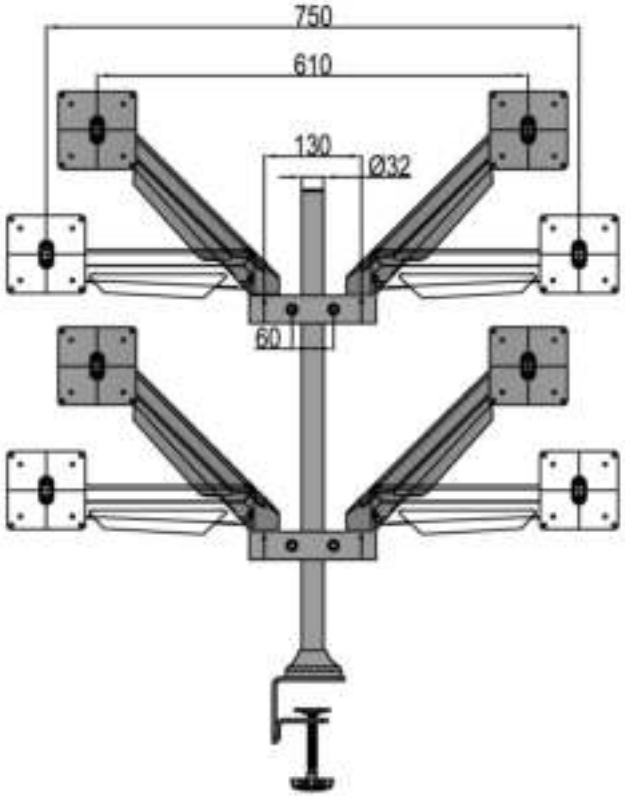

Product Dimensions

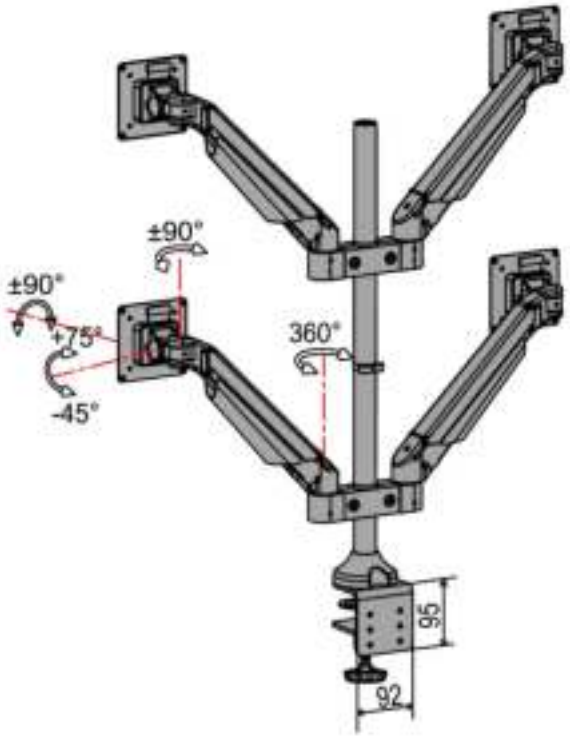

Multifunctional adjustment figure