Model 08-I / Model 10-I



Round trampolines

Assembly manual

Model 08-I / Model 10-I



	Model-08-I ø245cm			Model-10-I ø305cm		
	Quantity	Part number		Quantity	Part number	
Jumping mat	1	TEPL-08-222		1	TEPL-10-222	
Galvanized spring L=175mm ø3.2mm	60	TEPL-200-211/C		72	TEPL-200-211/C	
Safety pad	1	TEPL-08-333-I (green) or AVGR-08-333-I (grey) or CAM-08-333-I (camouflage) or ANBL-08-333-I (black)		1	TEPL-10-333-I (green) or AVGR-10-333-I (grey) or CAM-10-333-I (camouflage) or ANBL-10-333-I (black)	
Fastener for safety pad	6	TEPL-ELAS-A		6	TEPL-ELAS-A	
Fastener for safety pad	12	TEPL-ELAS-B		18	TEPL-ELAS-B	
H-tube	3	TEPL-08-115		3	TEPL-10-115	
Inground pin	6	TEPL-PIN		6	TEPL-PIN	
C-tube	3	TEPL-08-113		3	TEPL-10-113	
K-tube	3	TEPL-08-114		3	TEPL-10-114	
Tool for spring	1	TOOL-SPRING		1	TOOL-SPRING	
Inground pin for safe pad	12	TEPL-SP-PIN		12	TEPL-SP-PIN	
Users Manual	1	208010101		1	208010101	
Warning Card	1	208040101		1	208040101	
Tie rip for warning card	1	209010102		1	209010102	
Safety manual	1	208010301		1	208010301	

1.

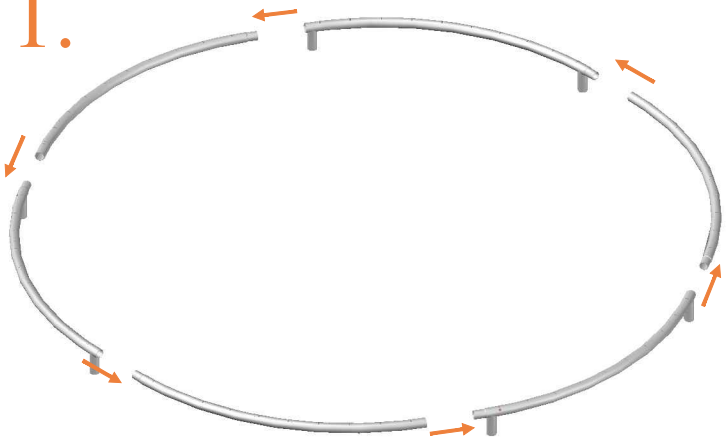

2.

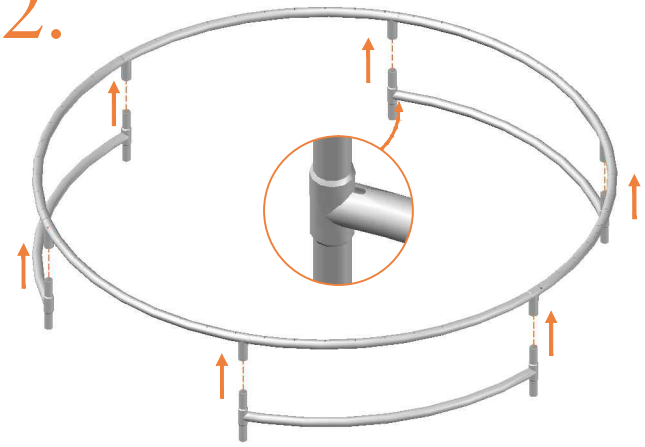

3.

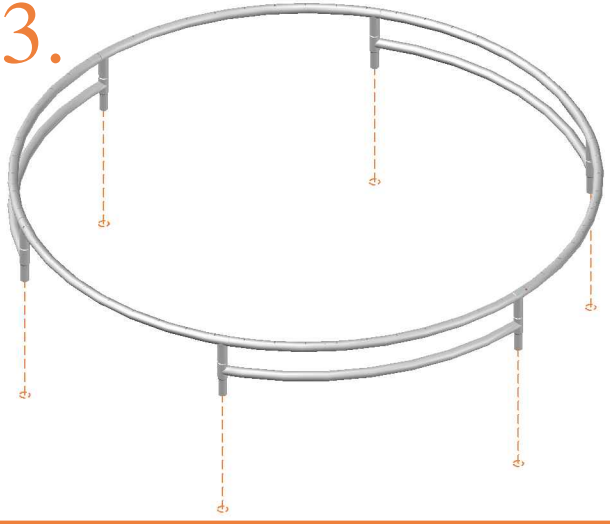

4.

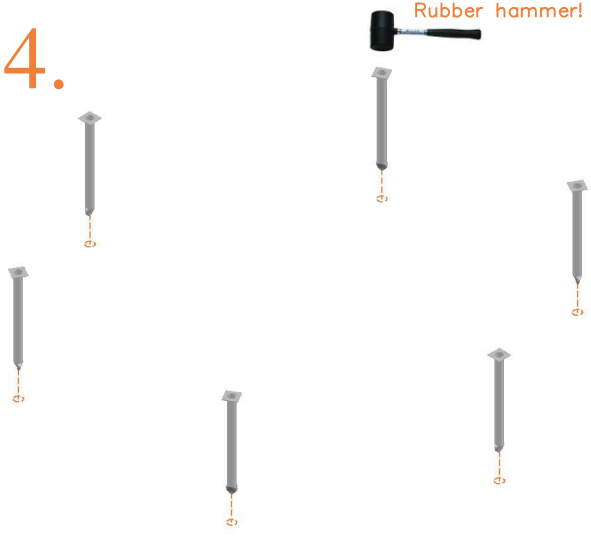

5.

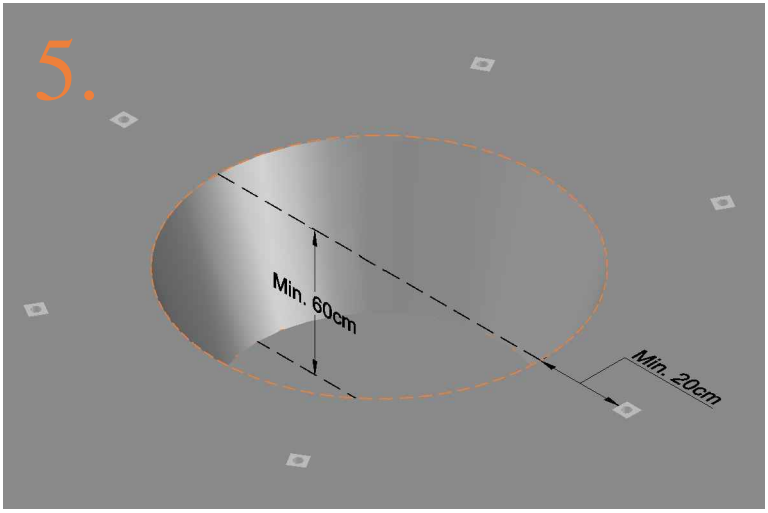

6.

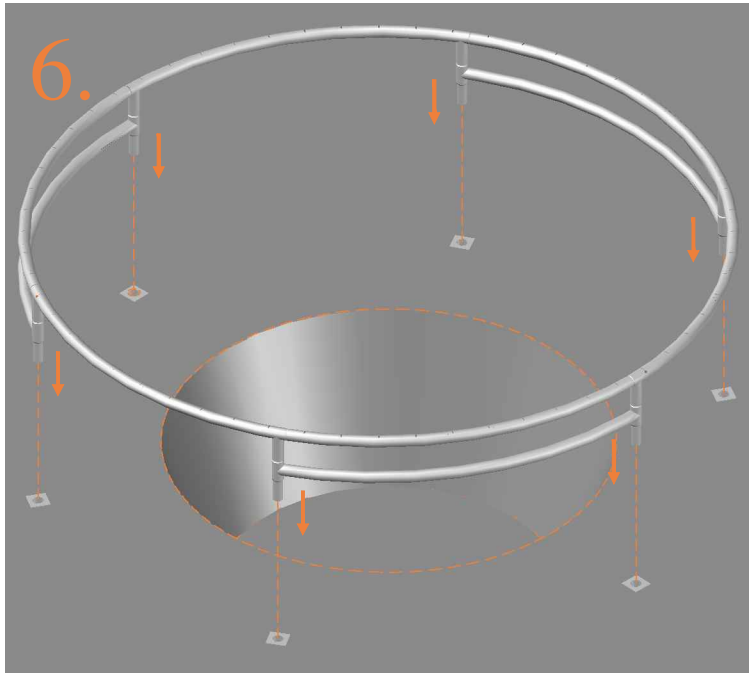

7.

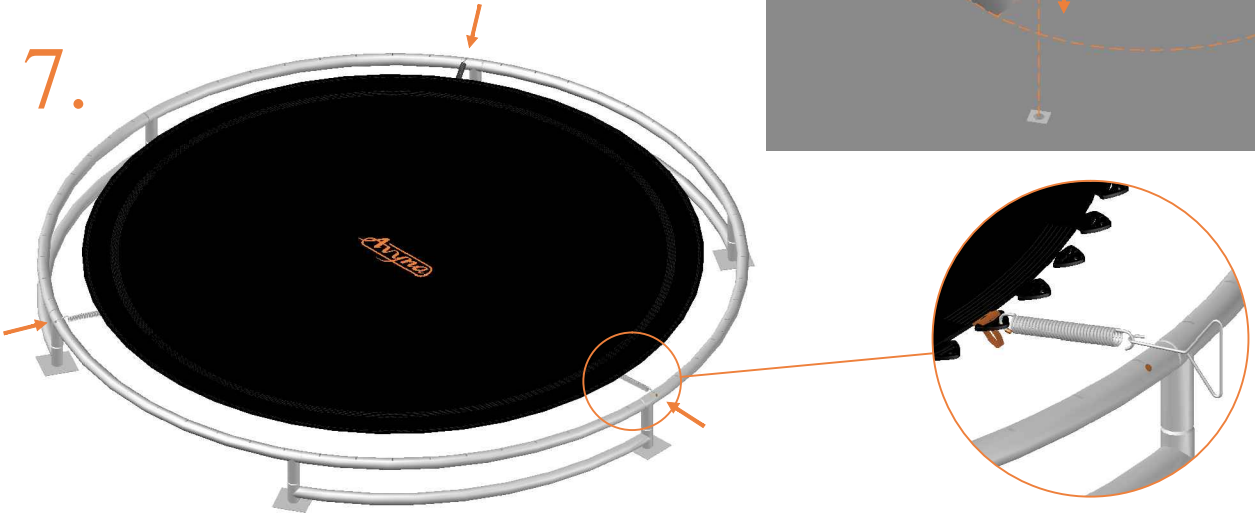

8.



9.



10.

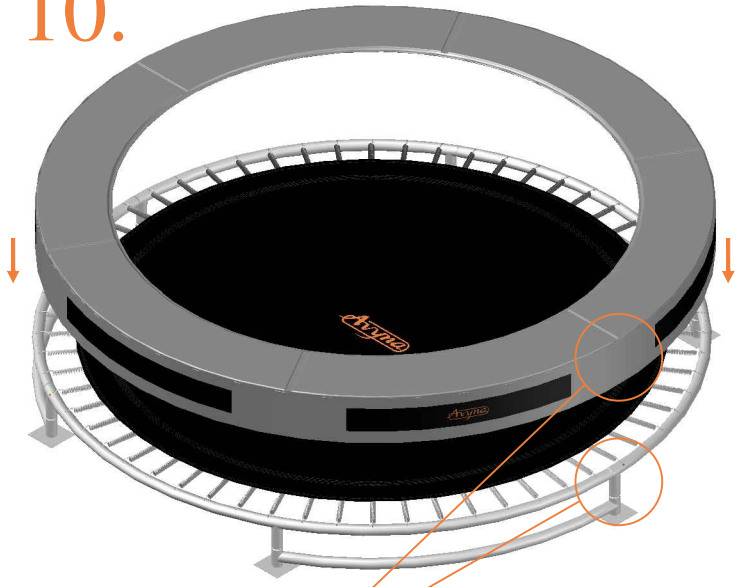

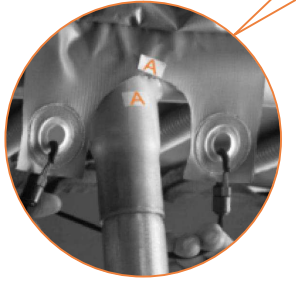

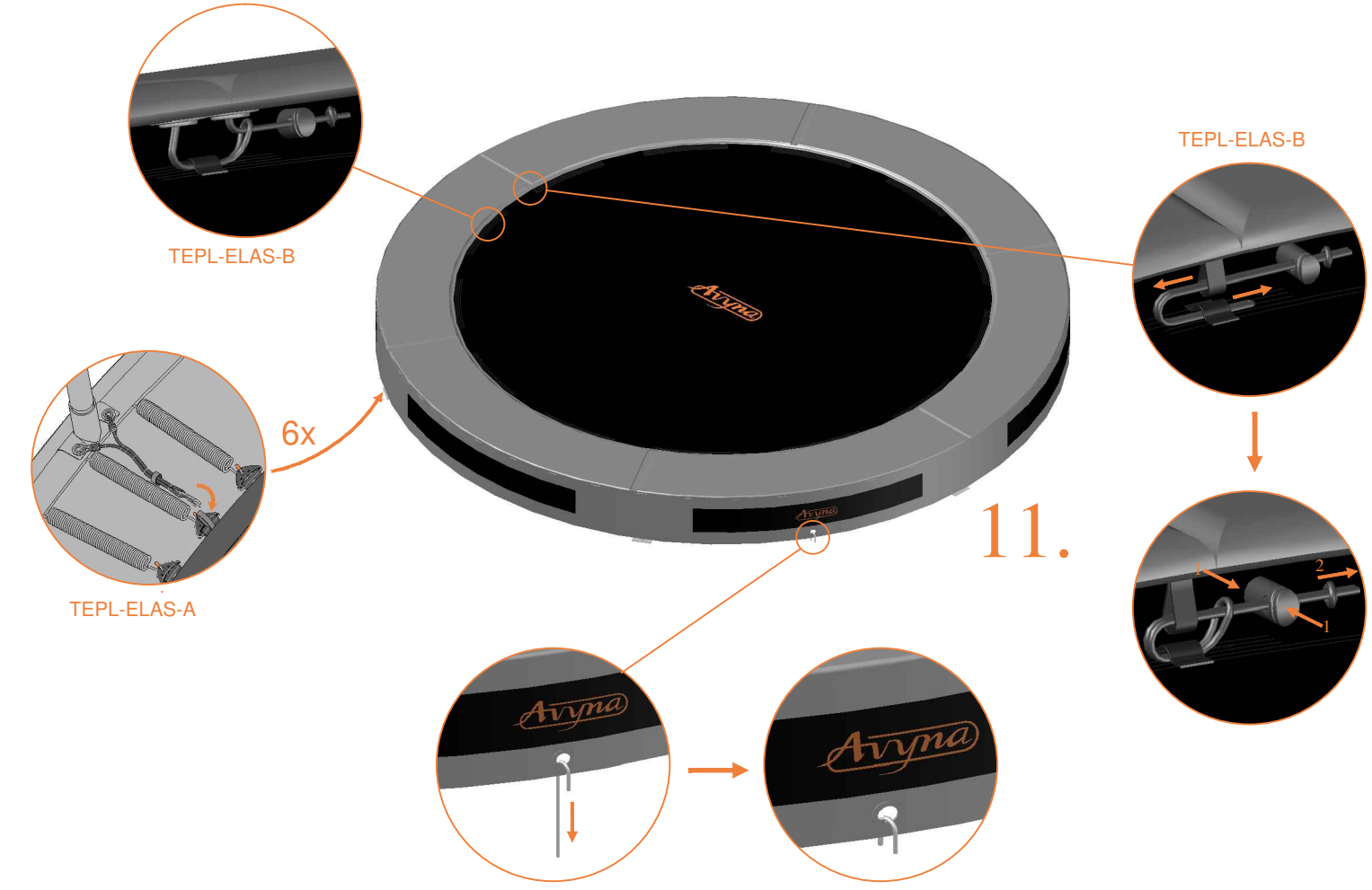
TEPL-ELAS-B
TEPL-ELAS-B
6x
TEPL-ELAS-A
11.
1
2
1

Safety net for Model 08-I / Model 10-I



	Model 08–i ⌀245cm			Model 10–i ⌀305cm		
	Quantity	Part number		Quantity	Part number	
Pole with sleeve for safety net	6	AVBL-08-802-A + AVBL-08-802-C		6	AVBL-08-802-A + AVBL-08-802-C	
Pole for safety net	6	AVBL-08-802-B		6	AVBL-10-802-B	
Clamp	6	CLAMP-TOOL- SN-08-i		6	CLAMP-TOOL- SN-10-i	
Safety net	1	ANBL-208		1	ANBL-210	
Straps for safety net	6	TEPL-BAND		6	TEPL-BAND	
Fiberglass Rod	1set	FIBERGLASS-ROD-08-i		1set	FIBERGLASS-ROD-10-i	
Screw M6-30	6	M6-30		6	M6-30	
Fastener for safety net	6	TEPL-ELAS-C		12	TEPL-ELAS-C	
Closure for safety net	2	TEPL-KNOOPJE		2	TEPL-KNOOPJE	
Screw M8-20	24	M8-20		24	M8-20	
Allen key	2	ALLEN-KEY		2	ALLEN-KEY	
Wrench	2	WRENCH		2	WRENCH	
Cap	6	TOP-CAP-BD		6	TOP-CAP-BD	

12.

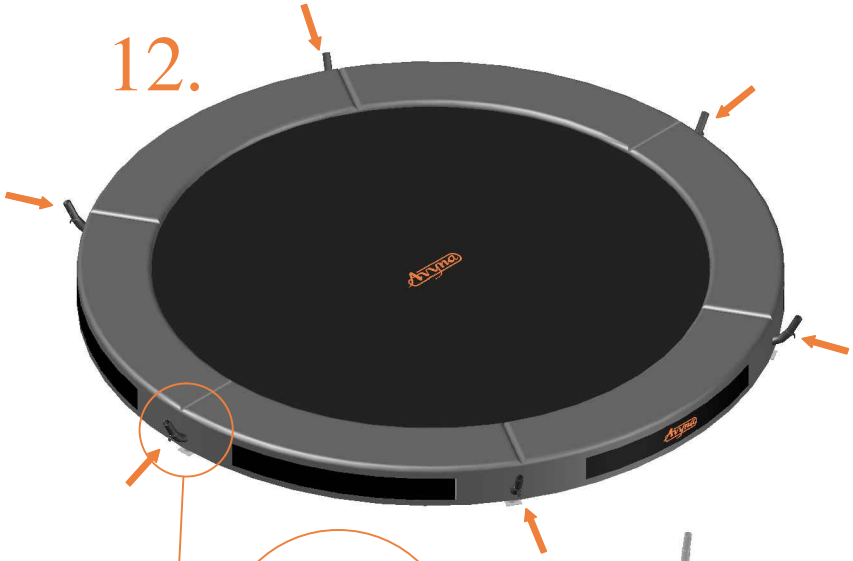

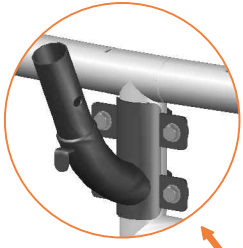

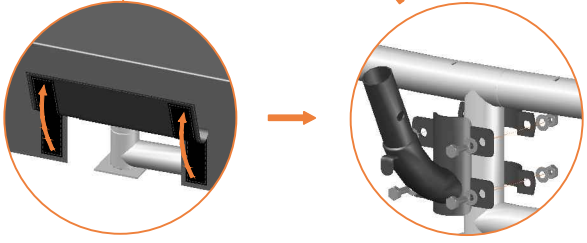

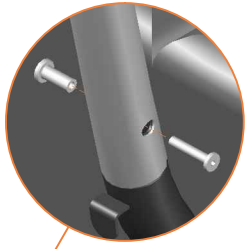

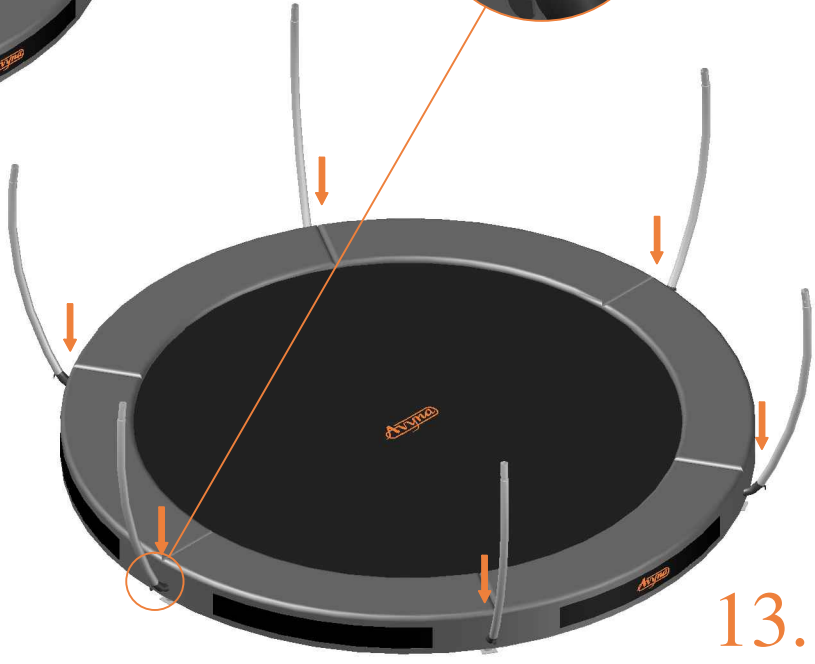

13.

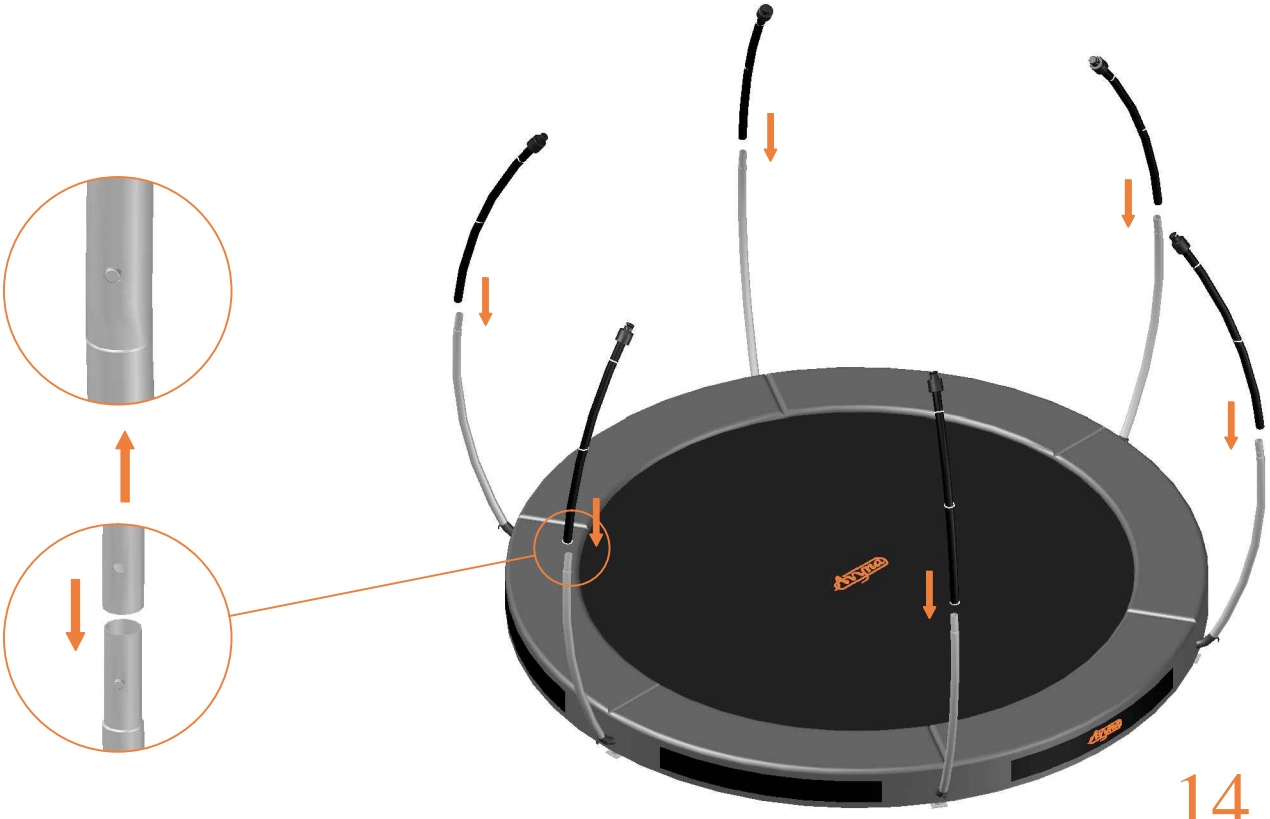

14.

15.



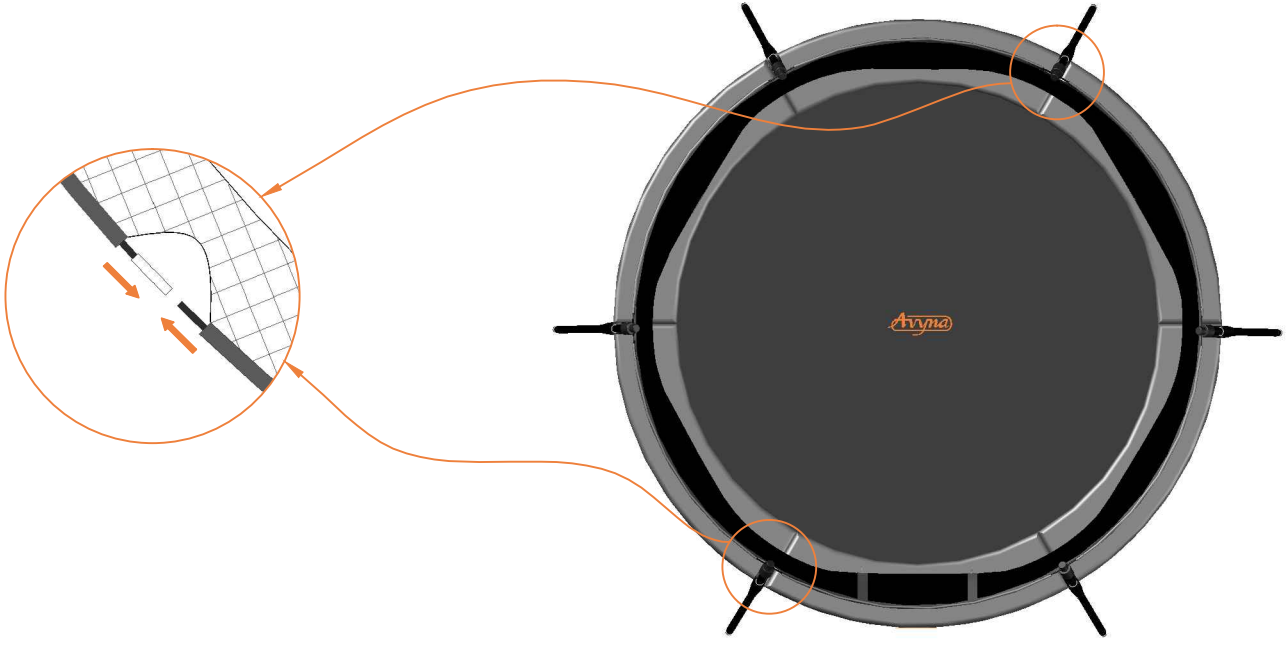

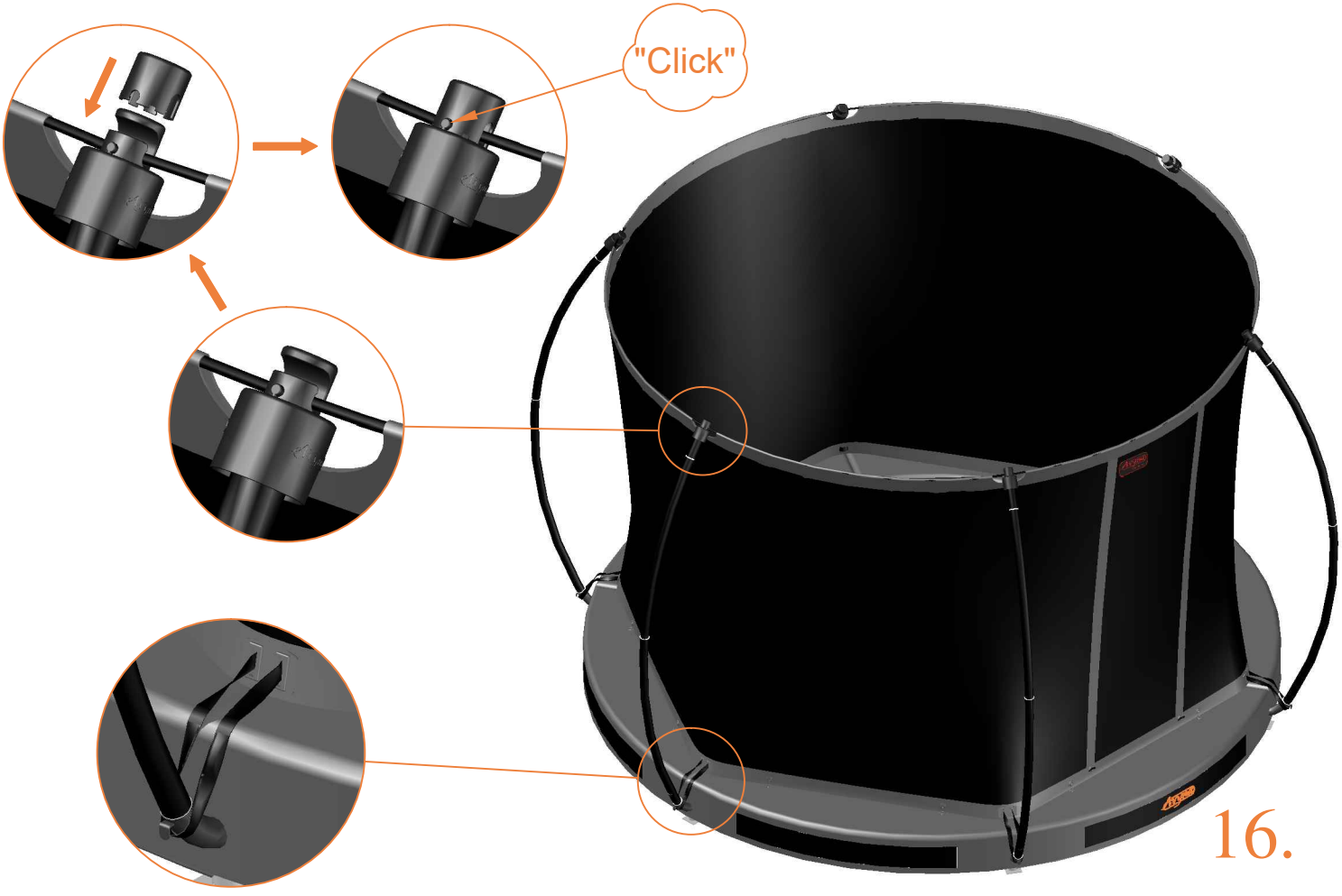

16.

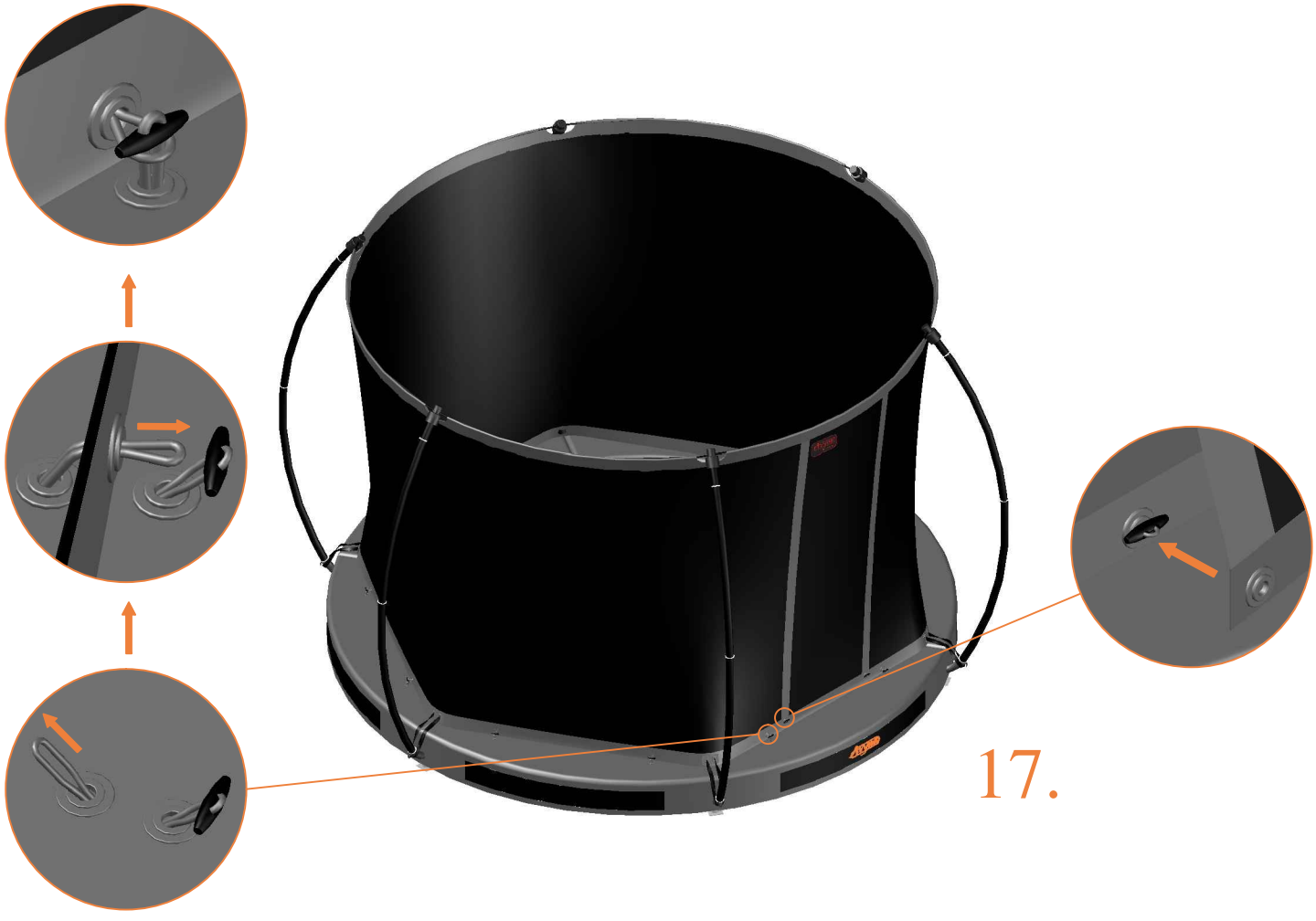

17.

TEPL-ELAS-C

Keep jumping

Sales office: Beneluxbaan 7
5121 DC Rijen
The Netherlands
sales@avyna.eu
www.avyna.eu