Installation Manual

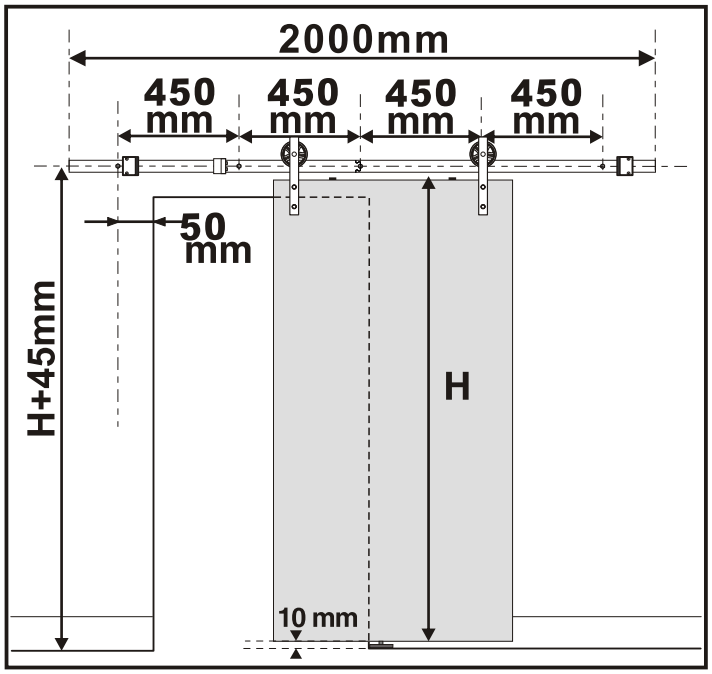

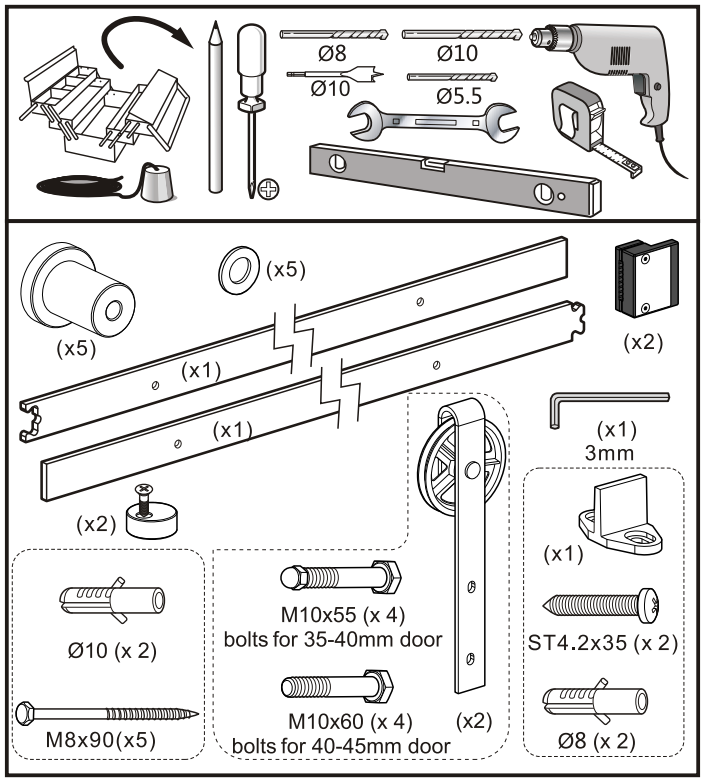

1

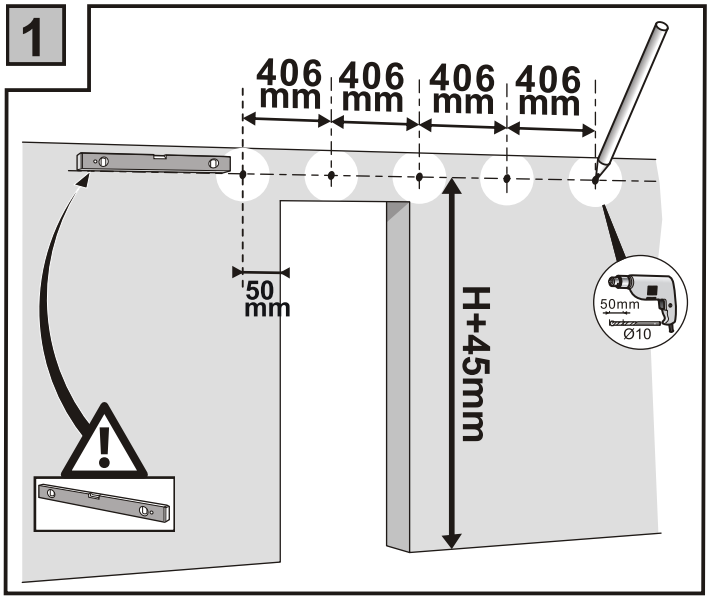

3

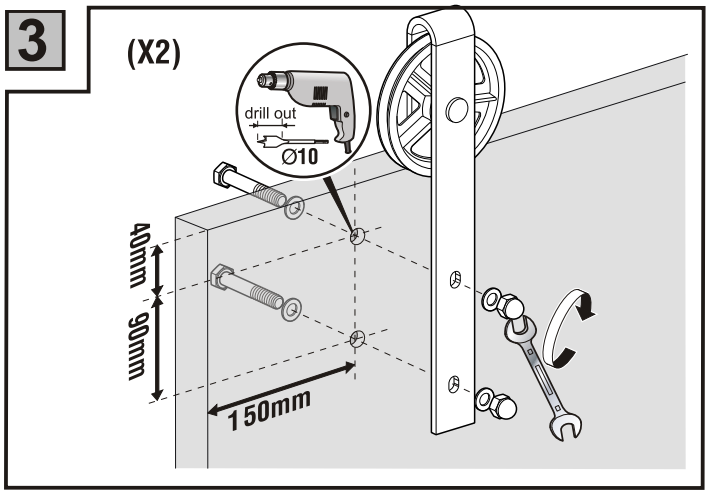

2

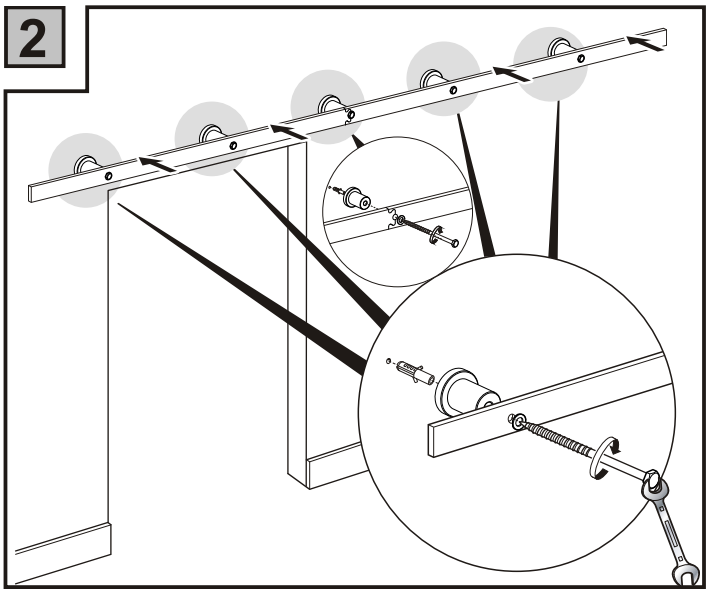

4

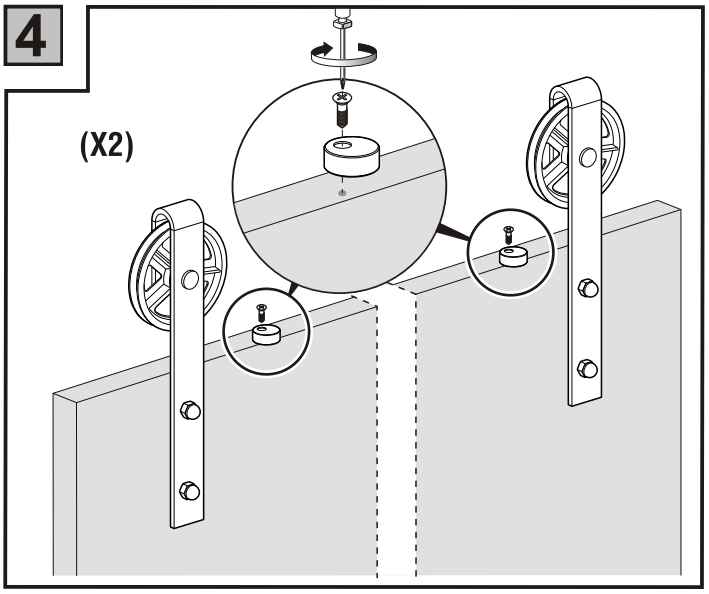

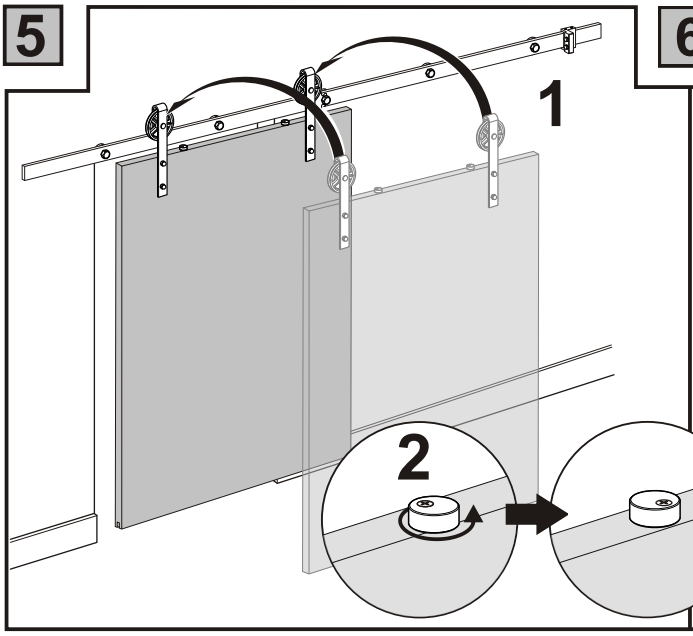
5
1
2

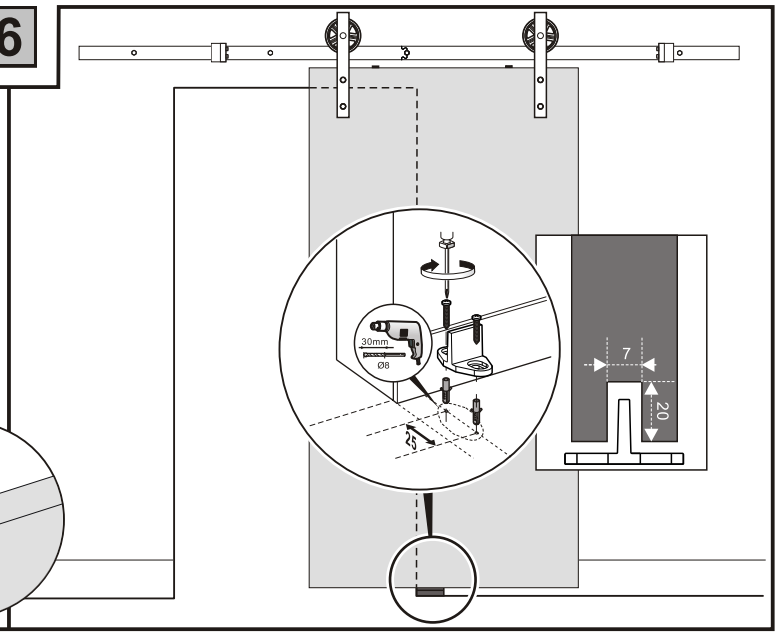
6
30mm
Ø8
25
7
20

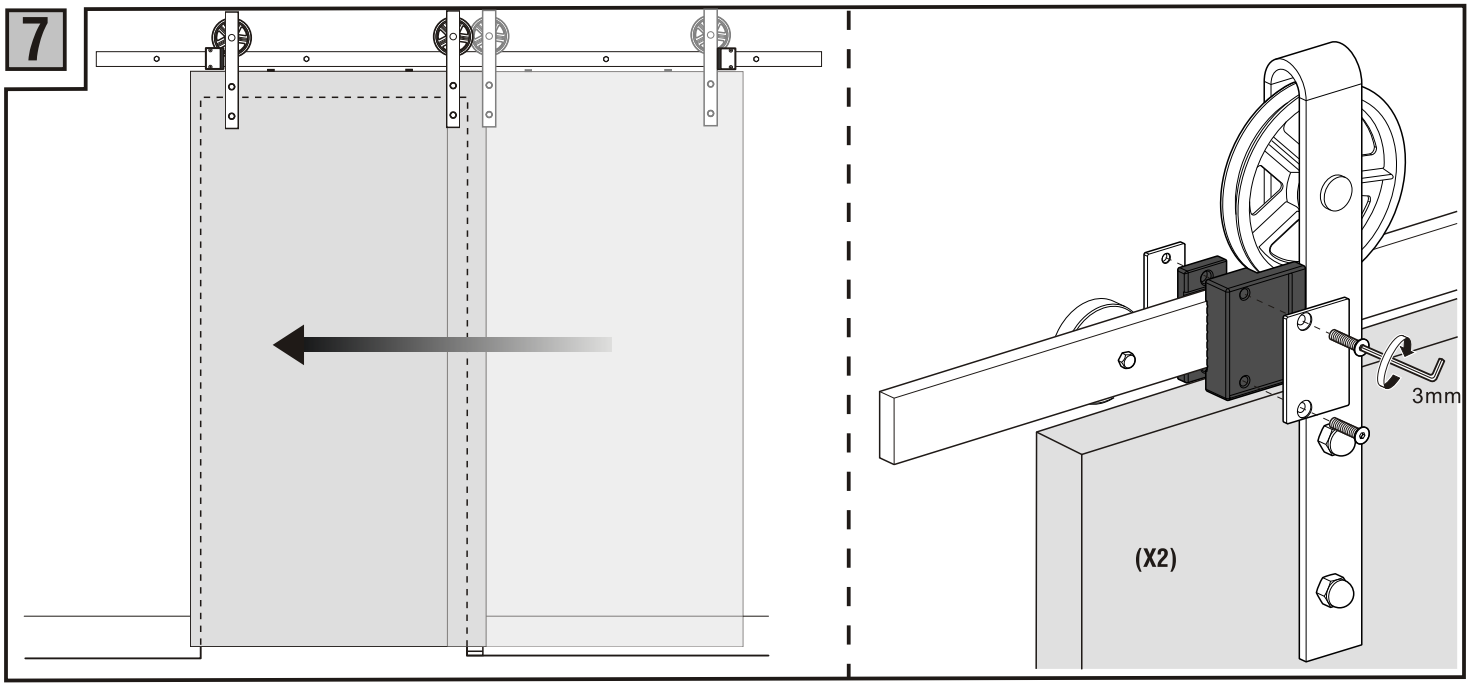
7
3mm
(X2)