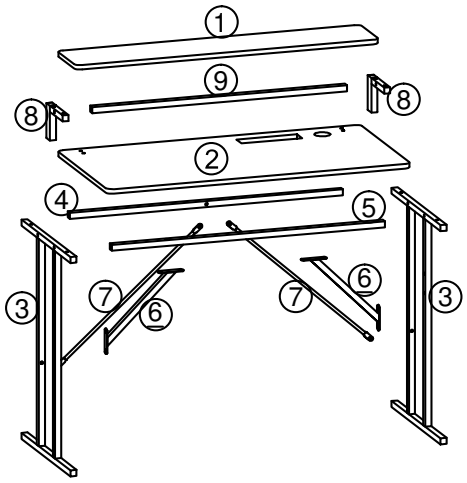

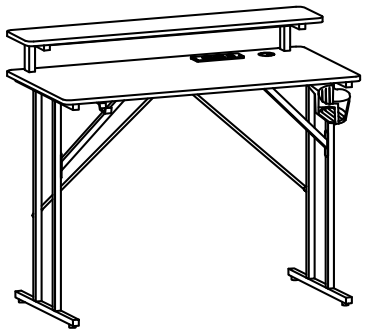

Components

①		1	②		1	③		2	④		1	⑤		1
⑥		2	⑦		2	⑧		2	⑨		1			

Screws &Tools

A	M6X35	10	B	M6X28	8	C	M6X15	13	D	M6X18	11	E	M8XØ22	4
F	ST3.5X14	2	G		1	H	Ø50	1	I	L=800	1	J		1
		1												

1

EX4

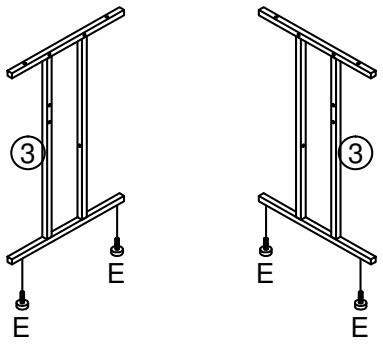

2

AX4

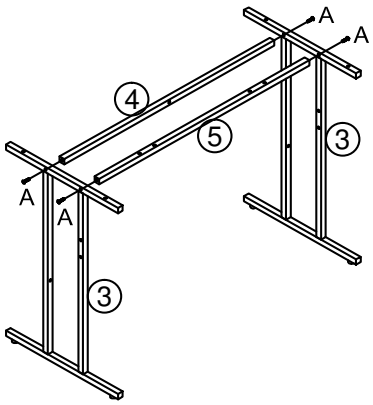

3

DX8

CX8

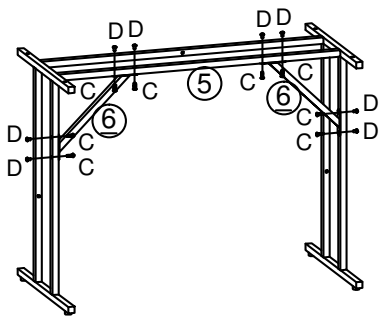

4

DX3

CX3

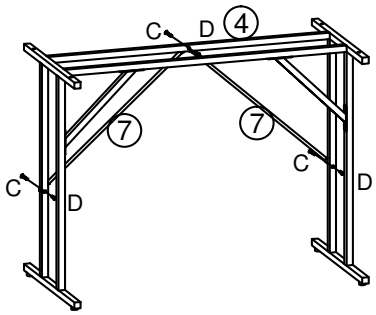

5

BX4

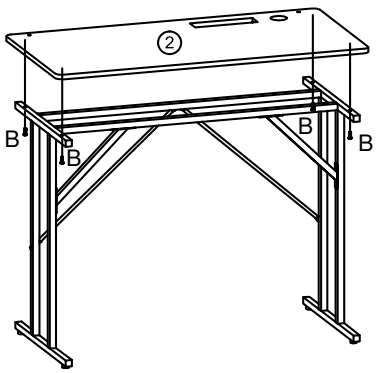

6

GX1

FX2

HX1

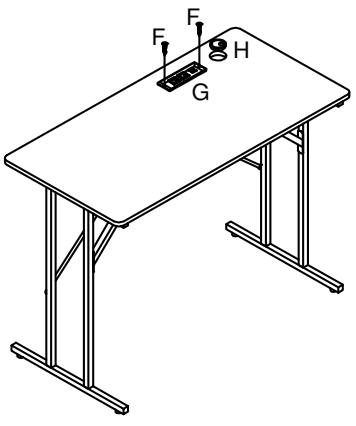

7

AX2

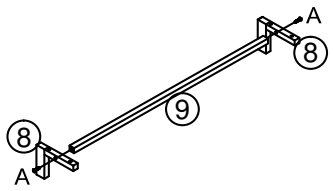

8

BX4

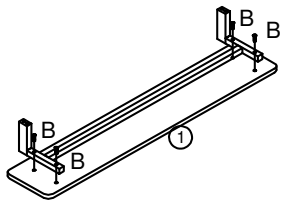

9

IX1

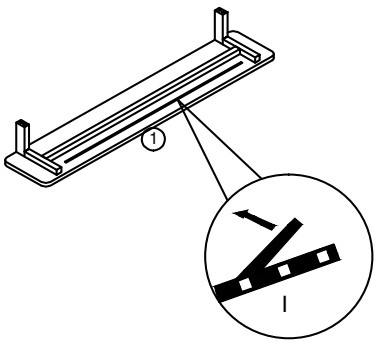

10

IX4

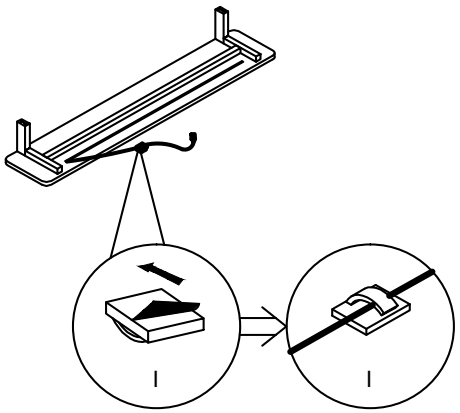

11

AX4

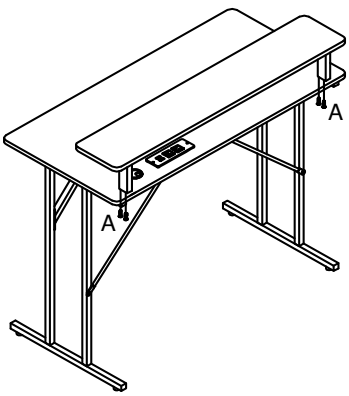

12

CX2

JX1

