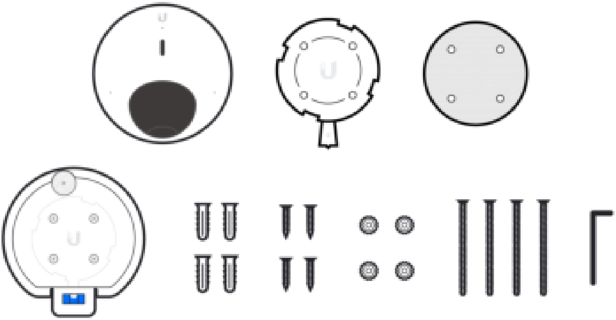

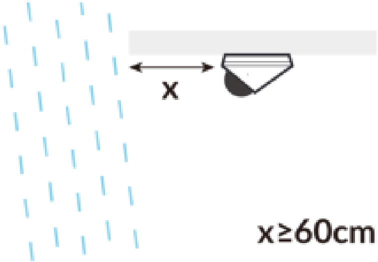

$x \geq 60\text{cm}$

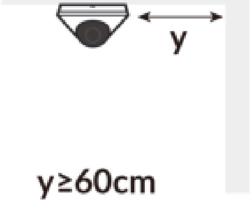

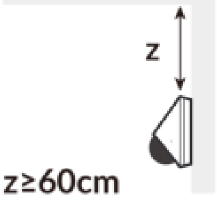

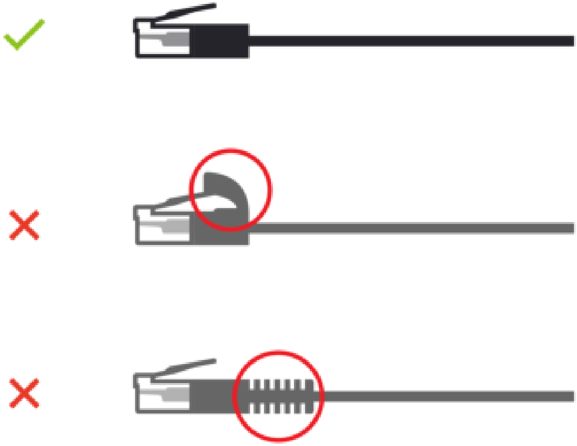

1

A

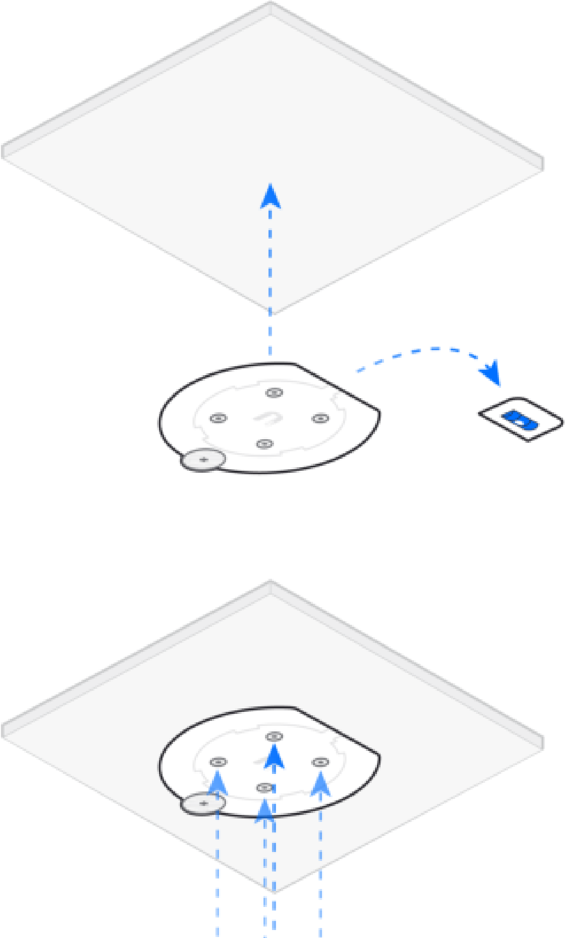

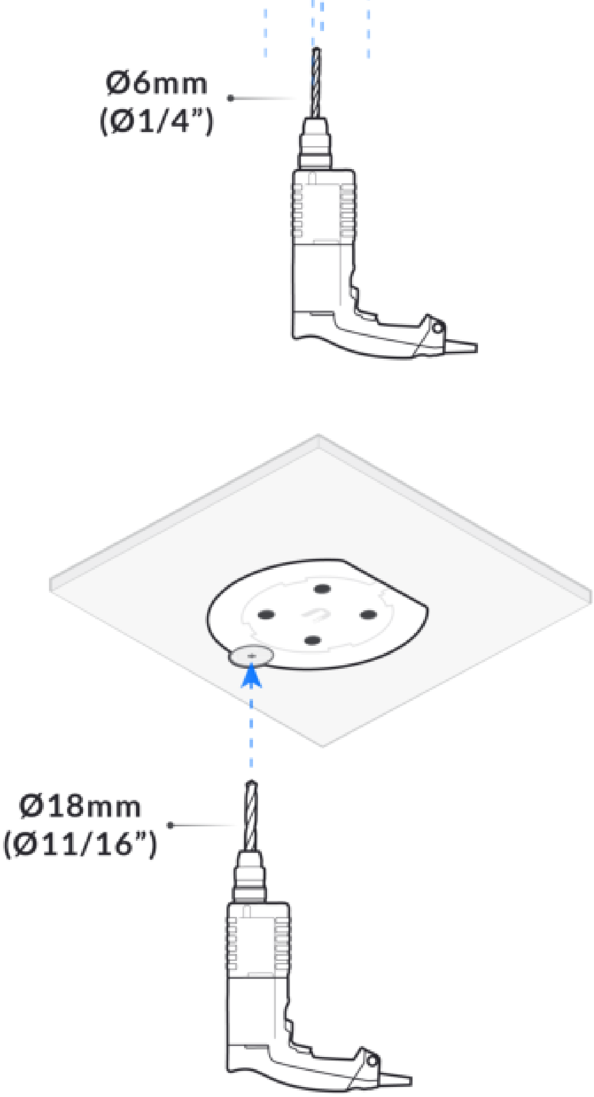
Ø6mm
(Ø1/4")
Ø18mm
(Ø11/16")

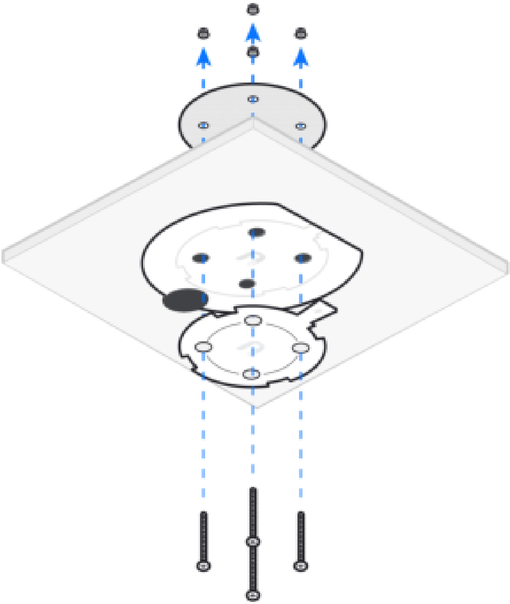

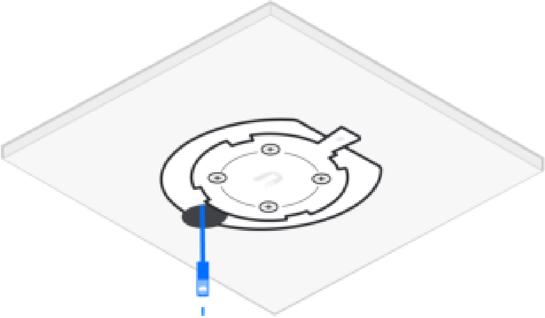

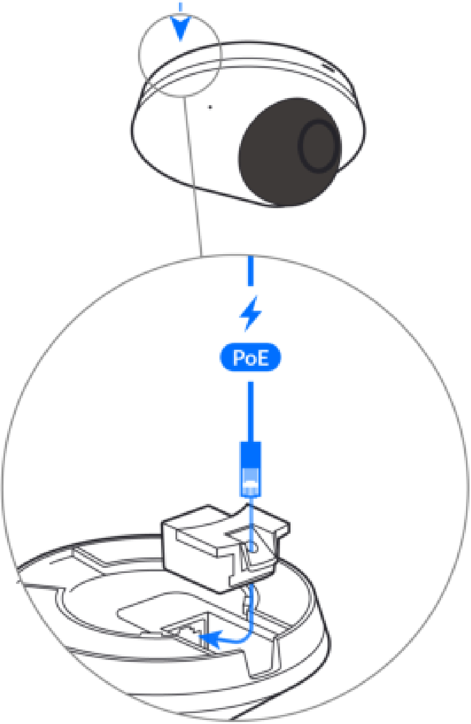

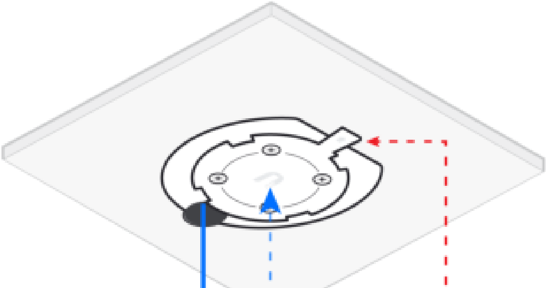

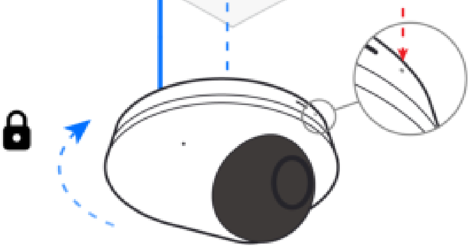

B

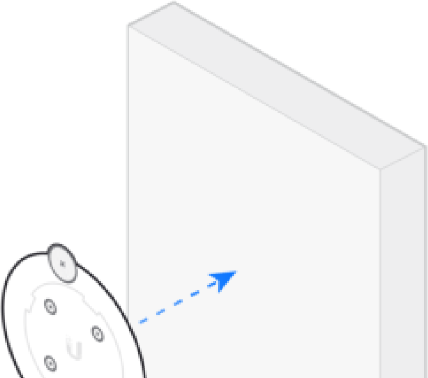

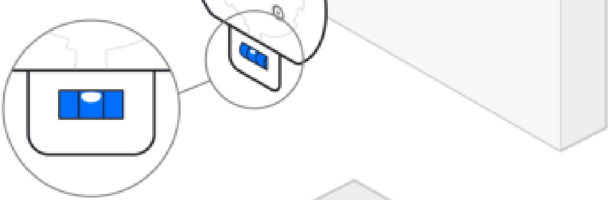

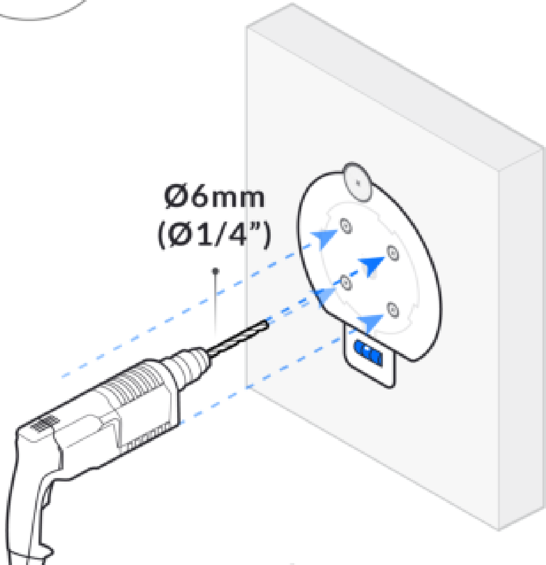

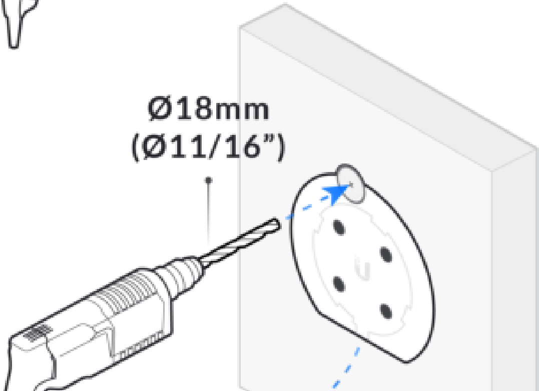
Ø18mm
(Ø11/16")

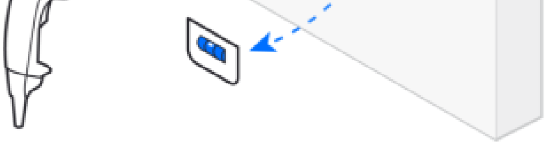

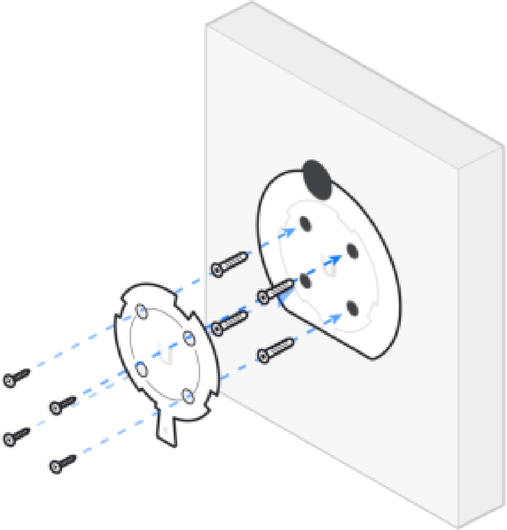

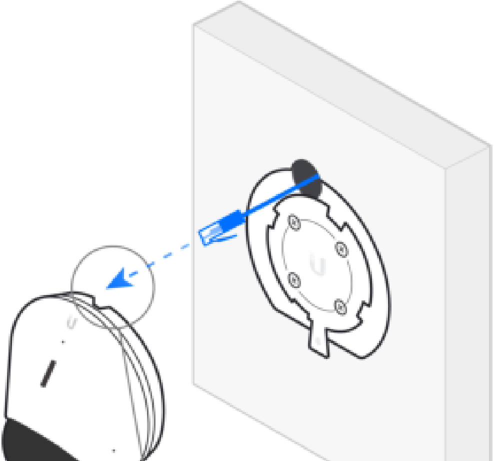

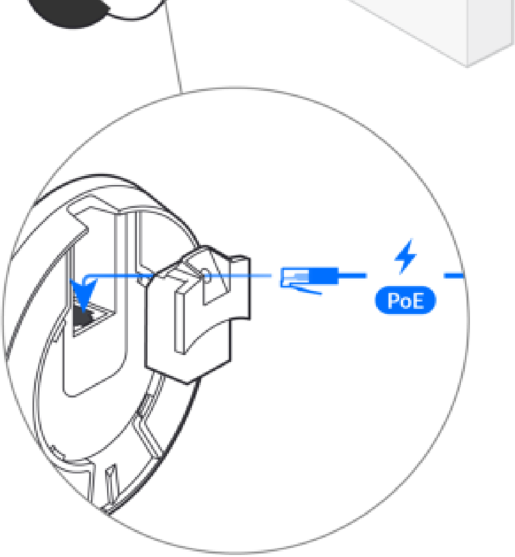

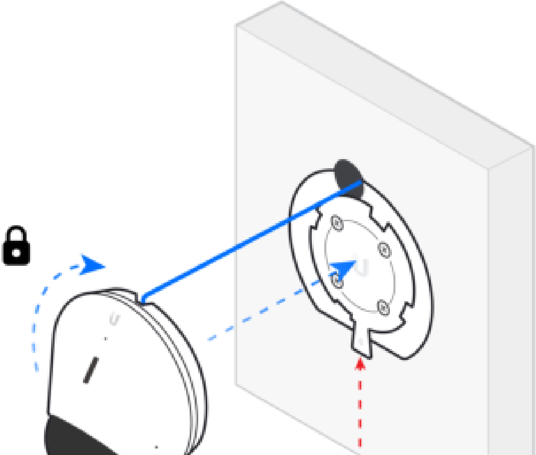

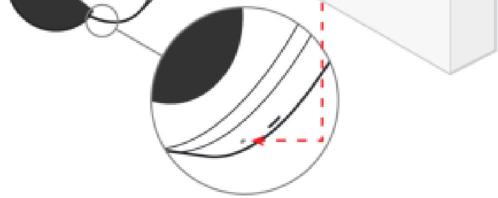

2

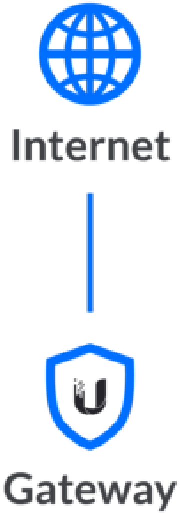
Internet
Gateway

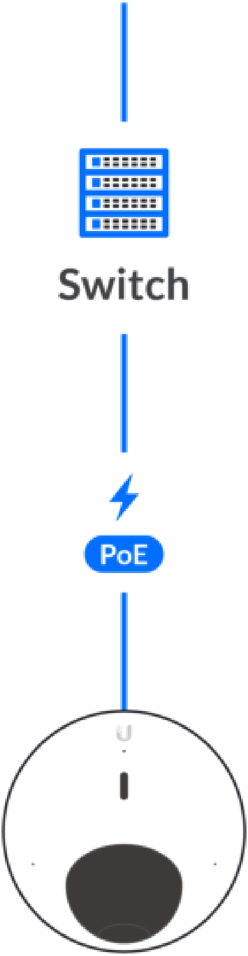

3

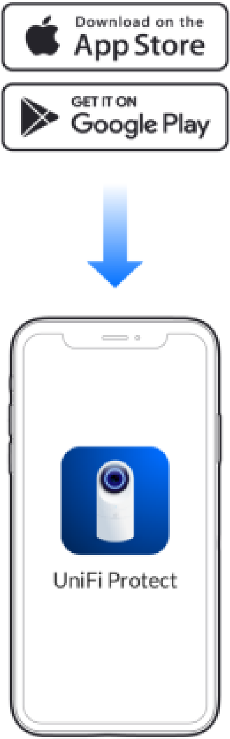
Download on the
App Store
GET IT ON
Google Play
UniFi Protect

4

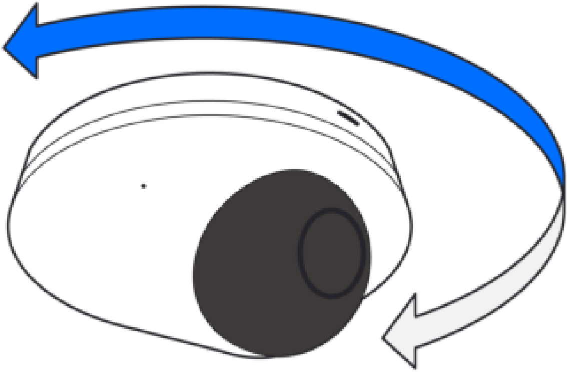

5

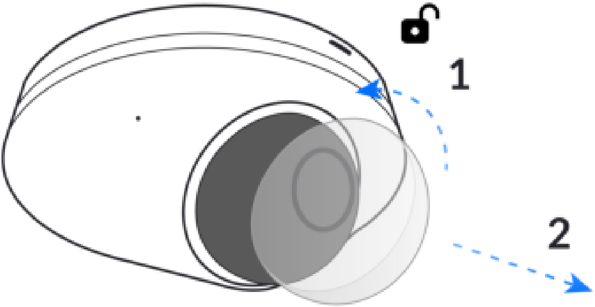

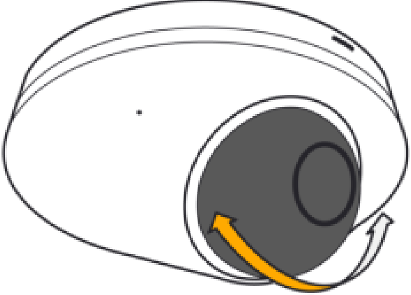

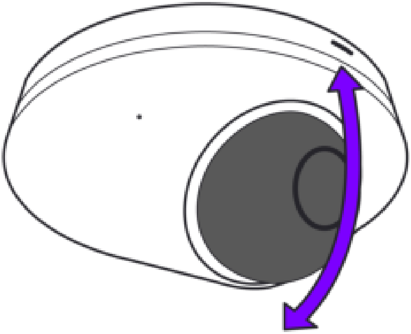

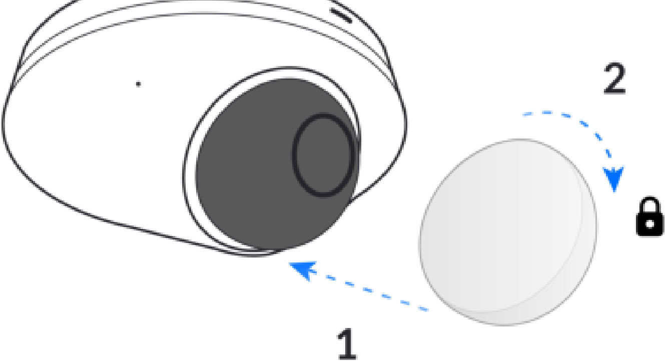

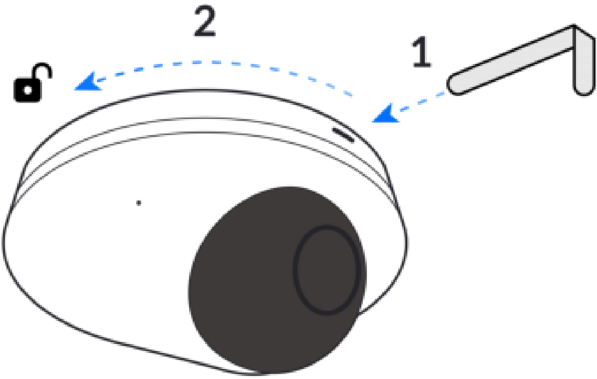

UniFi Protect

Get Answers
help.ui.com

UI Support