Brix

Double towel holder

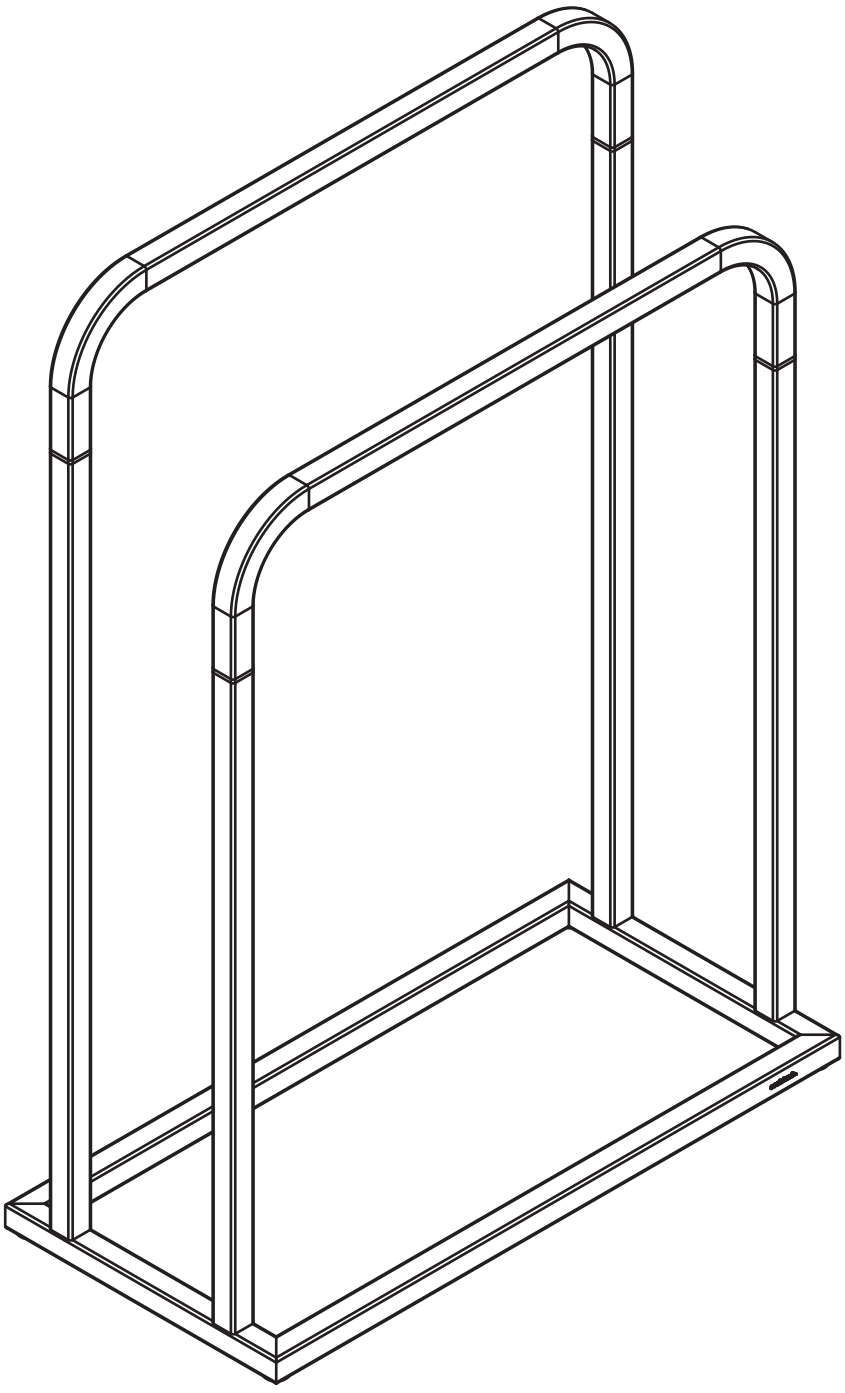

sealskin

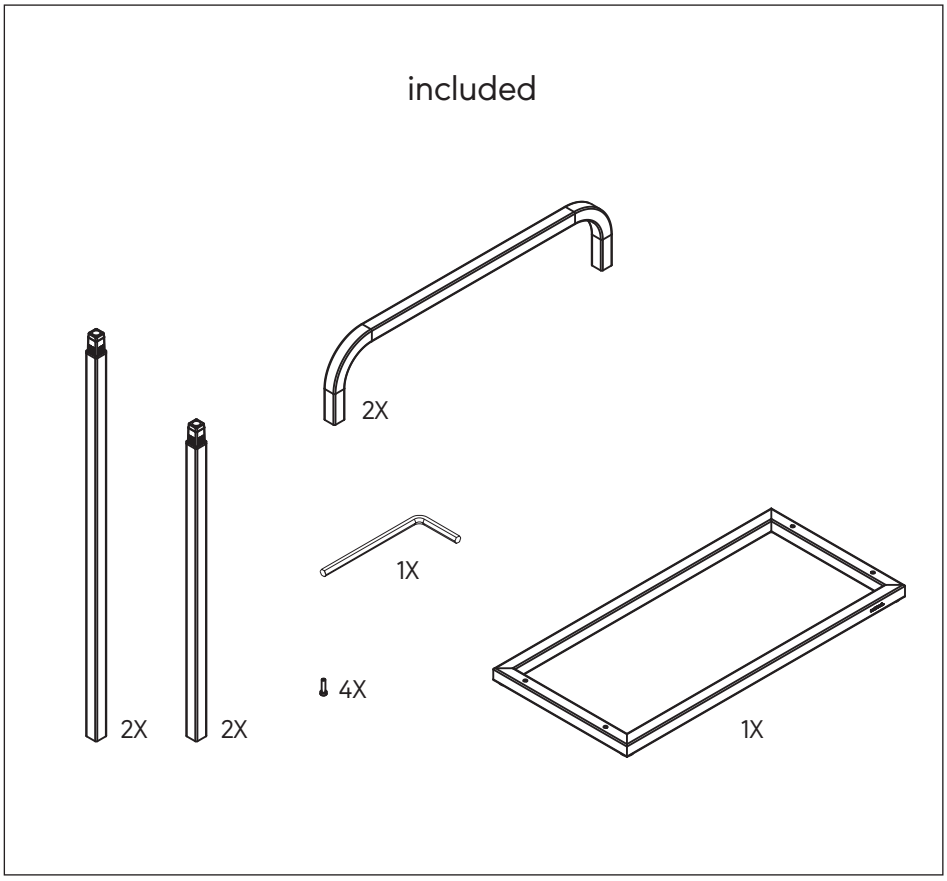
included
2X
1X
4X
2X
2X
1X

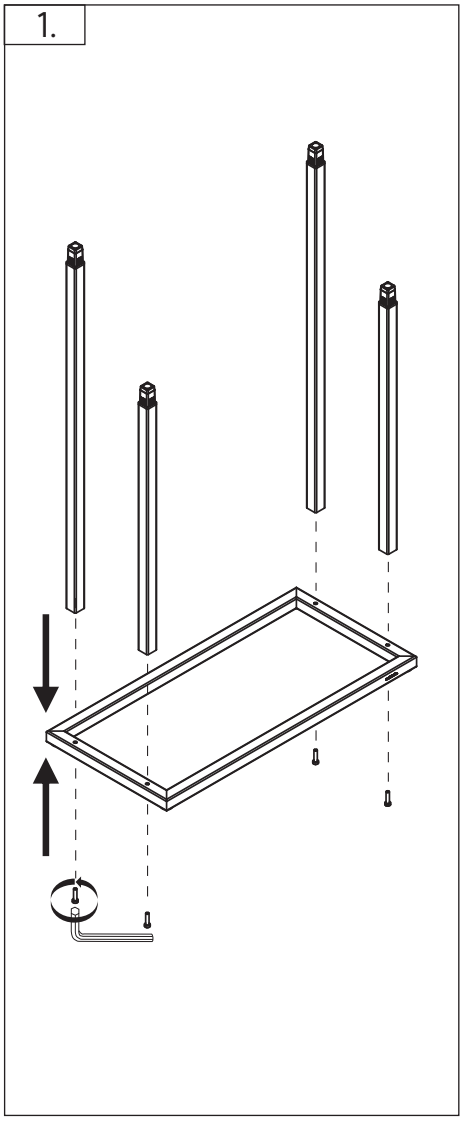
1.

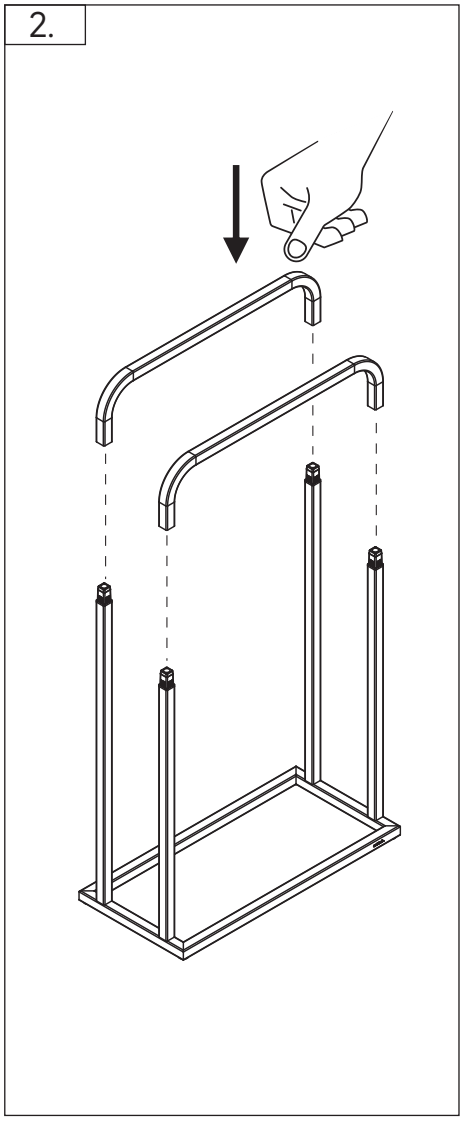
2.

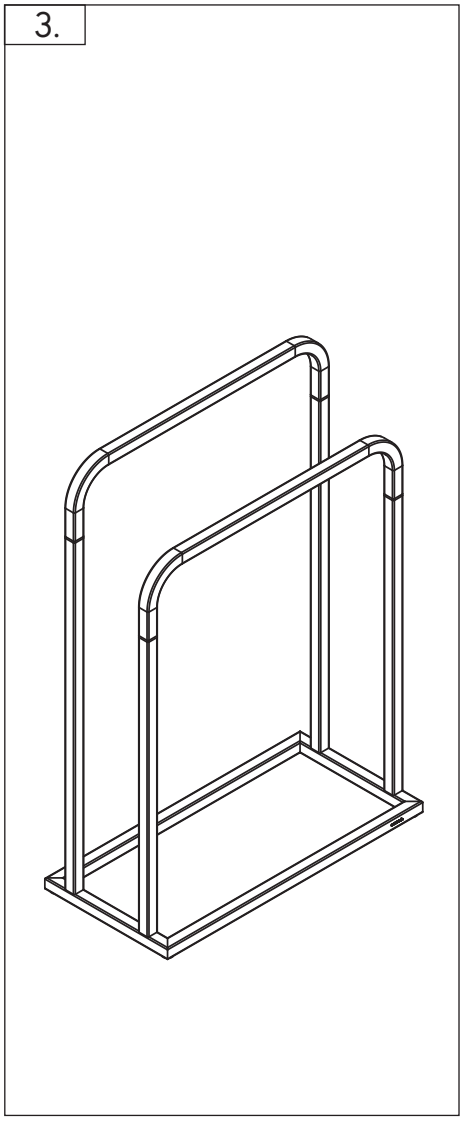
3.