10425

Booklet available in English
Heft in deutscher Sprache erhältlich
Livret disponible en français
Libretto disponibile in italiano

Folleto disponible en español
Folheto disponível em Português
如需中文版手册
Broszura w języku polskim

Brožura je k dispozici v češtině
Brožúra je k dispozícii v slovenčine
Útmutató elérhető magyarul
Broșură disponibilă în limba română

Buklets latviešu valodā ir pieejams
Brošüür on saadaval Eesti keeles
Bukletas lietuvių kalba prieinamas

LEGO.com/service/buildinginstructions

LEGO.com/sustainable-packaging

FR

DONNEZ OU RECYCLEZ

ASSOCIATION OU MAGASIN OU DÉCHÈTERIE

Adresses sur quefairedemesdechets.fr

Building the Big Skills Toddlers Need

We believe in big starts. Our big bricks are designed for little hands to master. When toddlers' creativity is set free, their opportunities to learn become endless. We call it Learning Through Play. And it inspires every LEGO® DUPLO® set. Based on thorough scientific research, each set helps young minds develop both IQ skills (cognitive, physical, creative) and EQ skills (social, emotional). Let all toddlers Start Off Big.

LEGO DUPLO sets are categorised into benefit territories that match toddlers' ages and developmental stages

CREATIVE SOLUTIONS + LEARN PATIENCE

LEGO® DUPLO® sets in this territory involve playful challenges that can help toddlers master a range of skills, including hand-eye coordination and how to focus, manage emotions and solve problems. When you allow toddlers to play independently, and offer guidance from a distance, you can help them develop perseverance and learn to ask for help when needed.

1
CREATE A
STORY
2

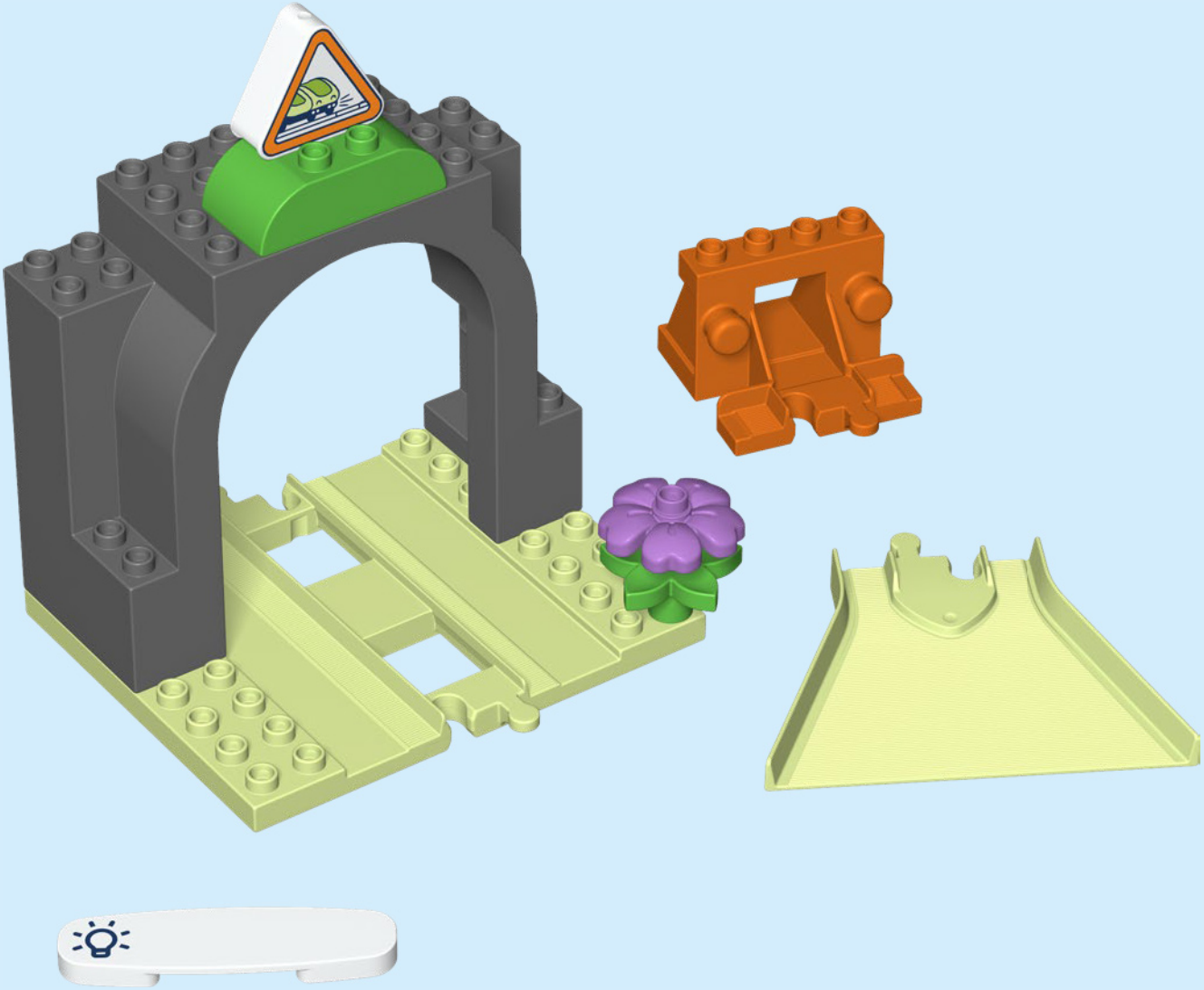

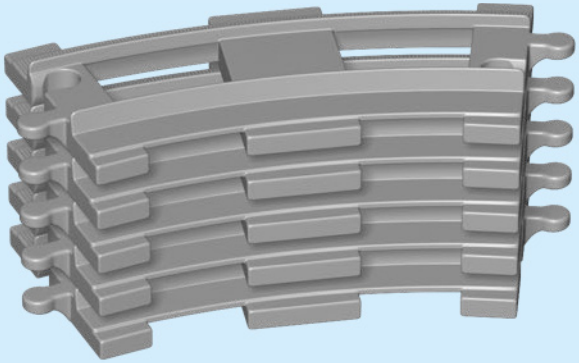

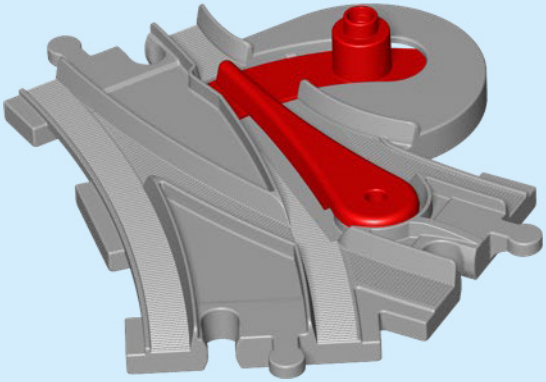

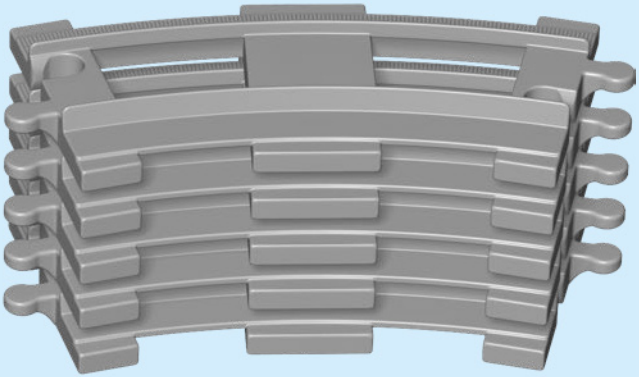

10425

10426

10427

10428

LEGO
duplo
Download on the
App Store
GET IT ON
Google Play
腾讯应用宝
安卓应用商店
Apple and the Apple logo are trademarks of Apple Inc., registered in the U.S. and other countries and regions. App Store is a service mark of Apple Inc. Google Play and the Google Play logo are trademarks of Google LLC. Tencent and the Tencent logo are trademarks of Tencent Inc.
LEGO.com/devicecheck

1x
6446310

1x
4121575

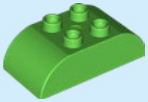

1x
4648246

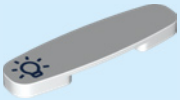

1x
6478068

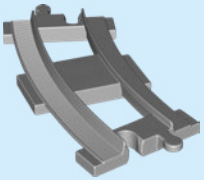

10x
6207493

1x
6478069

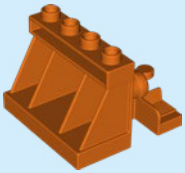

1x
6485969

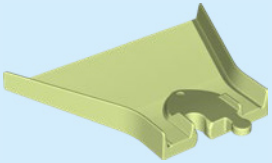

1x
6465960

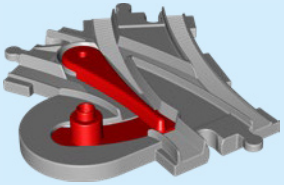

1x
6207508

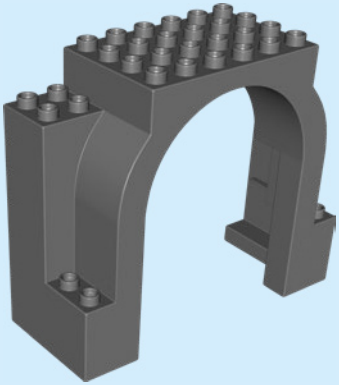

1x
6475828

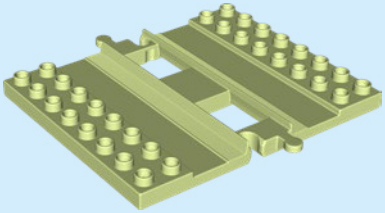

1x
6481090

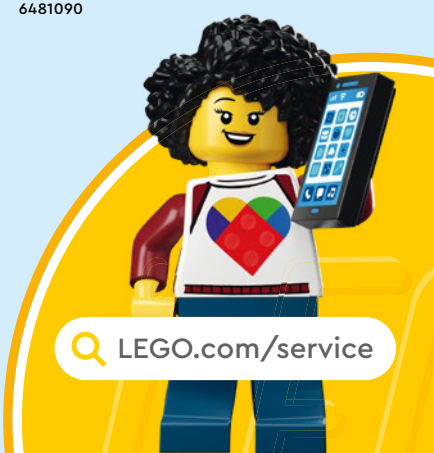

FEEDBACK & REWARD

Scan this QR code or go to **LEGO.COM/PRODUCTSURVEY** and share your feedback about this LEGO® set. You will receive a free digital reward at the end of the survey via download link.

EN: FEEDBACK AND REWARD. Share your feedback and receive a free digital reward. **DE: FEEDBACK MIT BONUS.** Teile dein Feedback und erhalte einen digitalen Bonus geschenkt. **FR: AVIS ET RÉCOMPENSE.** Donnez votre avis et recevez une récompense numérique gratuite. **IT: DAI LA TUA OPINIONE E VINCI.** Condividi il tuo feedback e ricevi un premio digitale gratuito. **ES: RECOMPENSAMOS TU OPINIÓN.** Comparte tu opinión y recibe una recompensa digital gratis. **PT: DÊ O SEU FEEDBACK E GANHE RECOMPENSAS.** Partilhe o seu feedback e receba uma recompensa digital gratuita. **ZH: 反馈有奖.** 分享您的反馈意见，获取免费数字奖励。**PL: WYRAŹ OPINIĘ, ODBIERZ NAGRODĘ.** Podziel się swoją opinią i odbierz cyfrową nagrodę zupełnie za darmo. **CS: ODMĚNA ZA ZPĚTNOU VAZBU.** Podělte se o zpětnou vazbu a obdržíte bezplatnou digitální odměnu. **SK: ODMENA ZA SPÄTNÚ VÄZBU.** Podeľte sa o svoj názor a získajte bezplatnú digitálnu odmenu. **HU: VISSZAJELZÉS ÉS JUTALOM.** Oszd meg véleményed az ingyenes digitális jutalomért! **RO: FEEDBACK ȘI RECOMPENSĂ.** Trimite feedback și primește o recompensă digitală gratuită. **BG: ОТЗИВИ И НАГРАДИ.** Споделете вашите отзиви и получете безплатна дигитална награда. **LV: ATSAUKSMES UN BALVAS.** Sniedz savu atsauksmi un saņem bezmaksas digitālo balvu. **ET: TAGASISIDE JA PREEMIA.** Jaga oma tagasisidet ja saad kingituseks digitaalse preemia. **LT: ATSILIEPIMAI IR ATLYGIS.** Bendrinkite savo atsiliepimą ir gaukite nemokamą skaitmeninį atlygį.

LEGO, the LEGO logo and DUPLO are trademarks of the LEGO Group. ©2025 The LEGO Group.

6608263