DOUXE

INSTALLATION MANUAL

Interactive Counterbalance Flat Screen Desk Mount

FM-SPM02

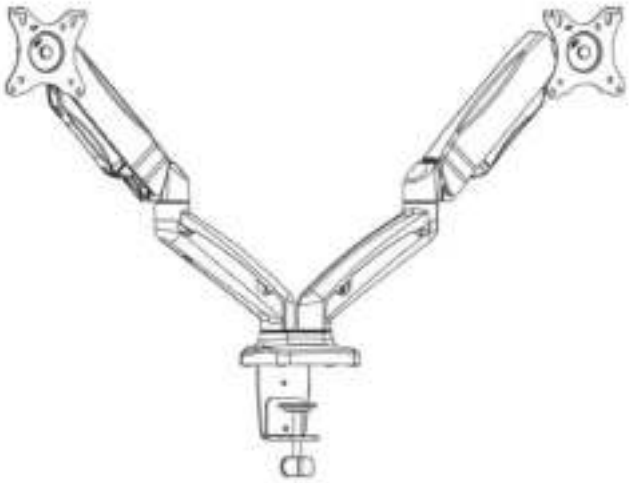

3

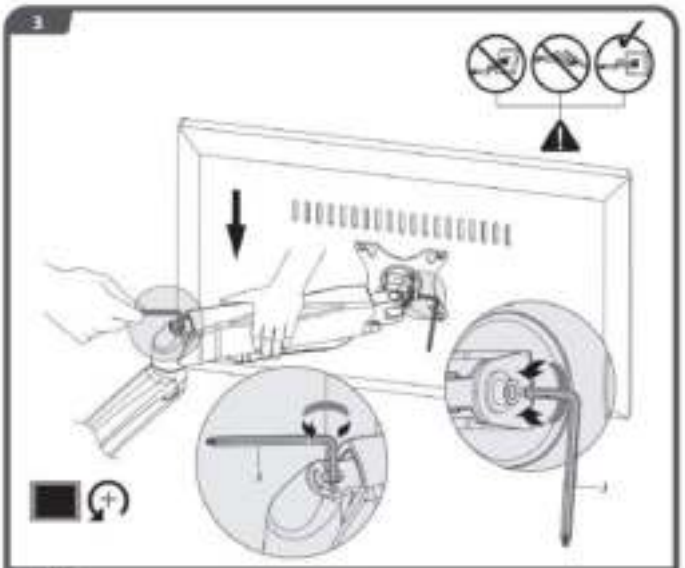

4

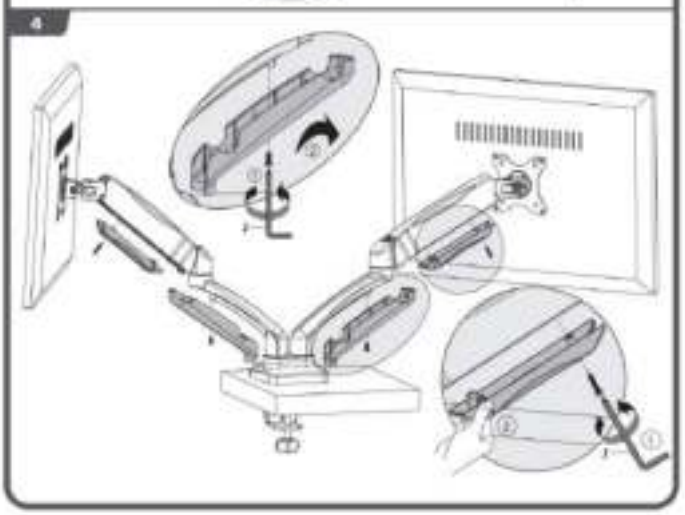

5

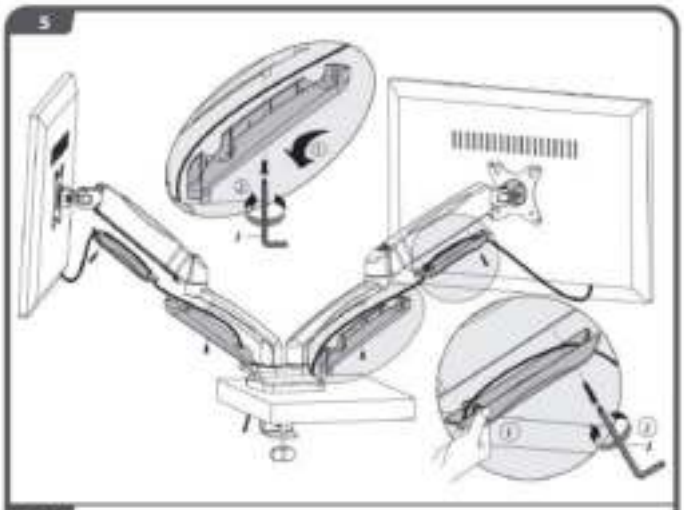

6

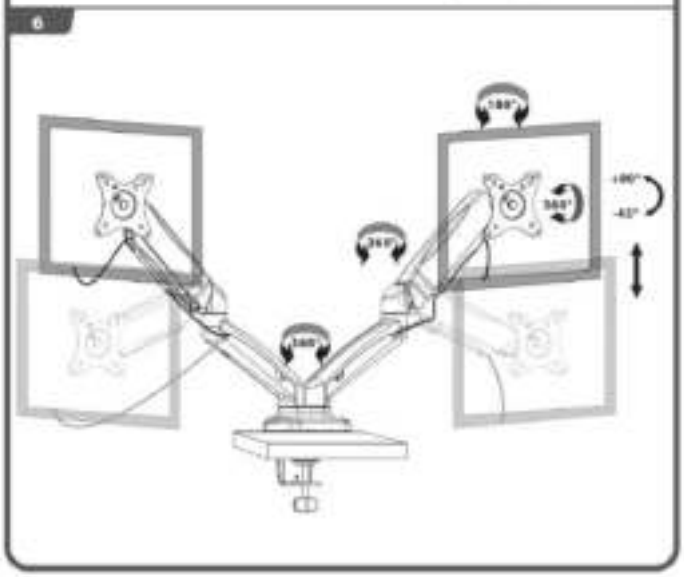

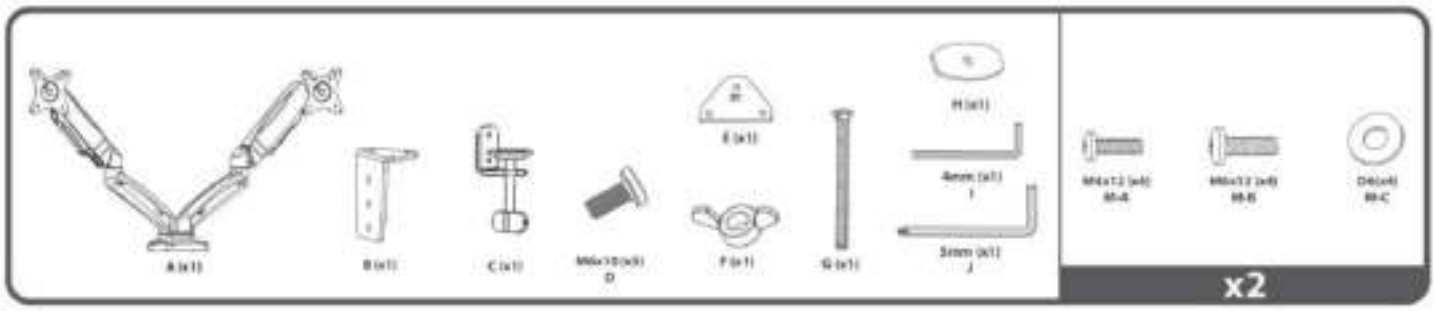

1a-1

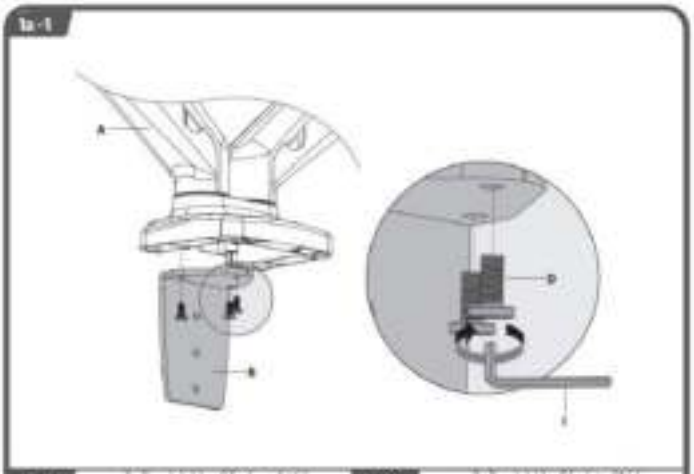

1a-2a

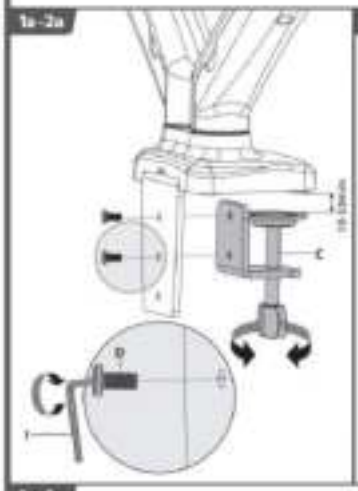

1a-2b

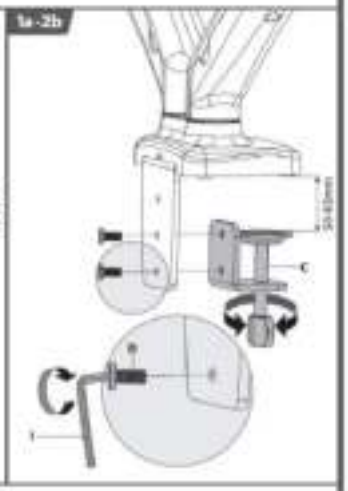

1a-3

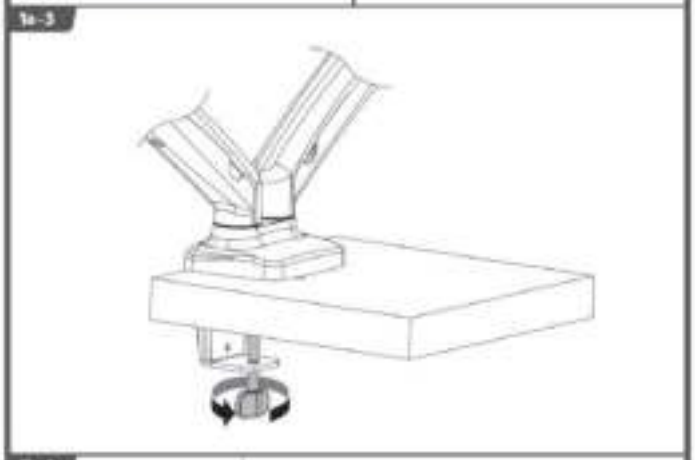

1b-1

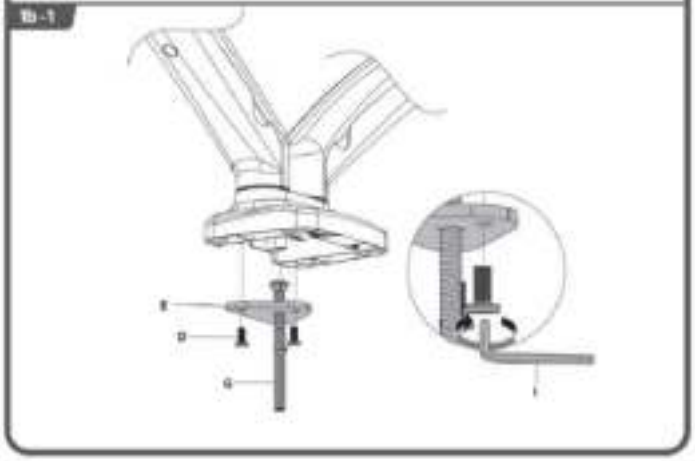

1b-2

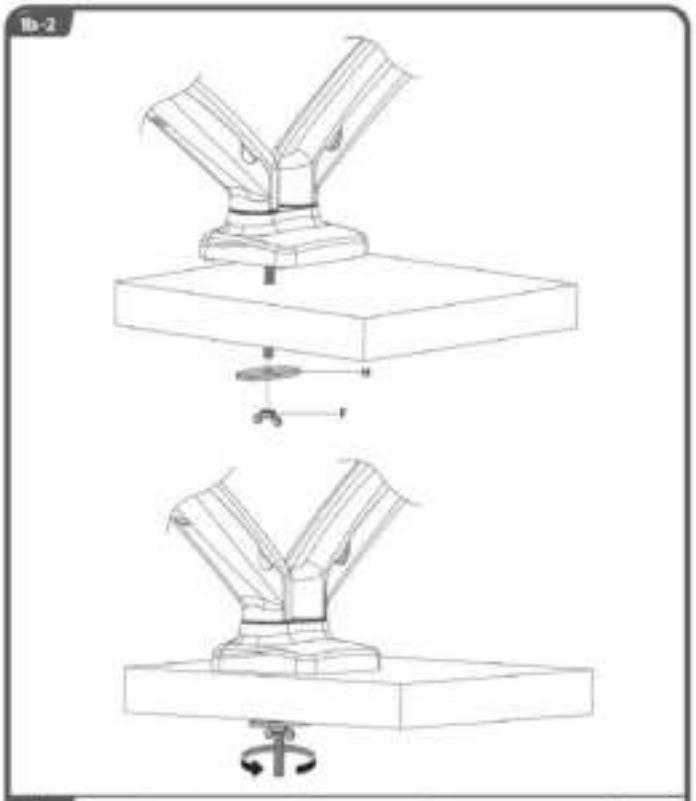
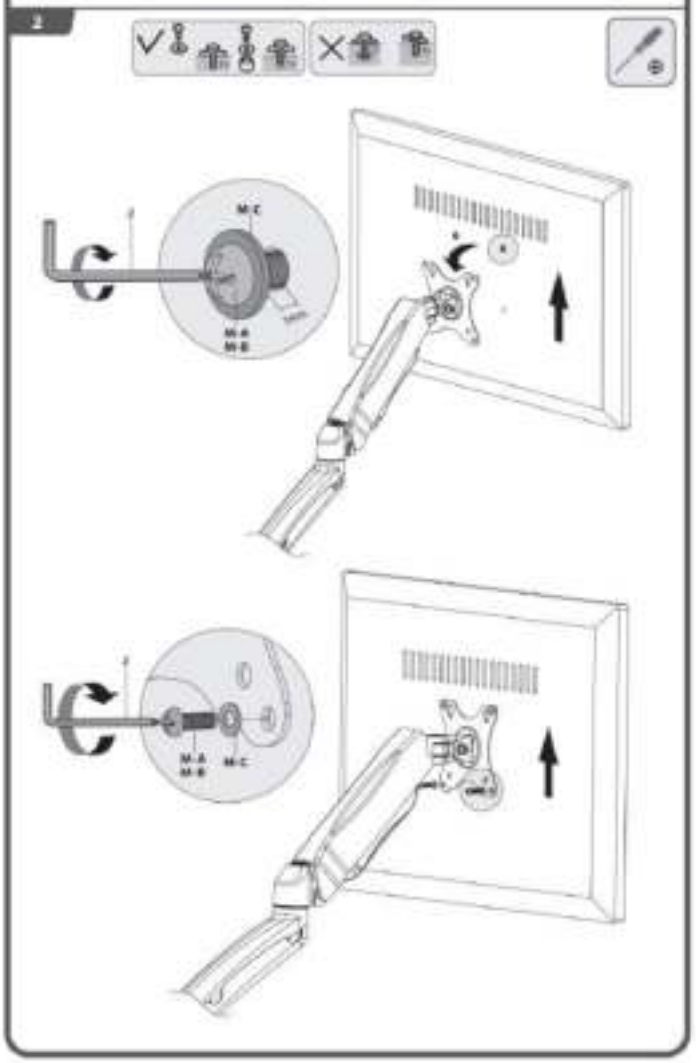
2