zuiver

Name product CABINET SEVEN
Article number 4100104, 4100105, 1001485

ASSEMBLY INSTRUCTIONS

Please read the instructions carefully for correct and safe assembly.

1

Ⓐ BODY

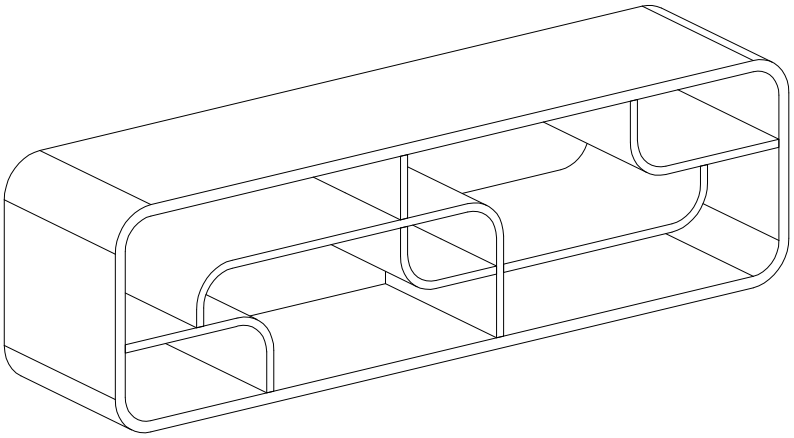

X1

2

① FELT PAD

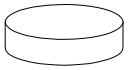

X06

Thank you for purchasing this Zuiver product.

zuiver

Name product CABINET SEVEN
Article number 4100104, 4100105

ASSEMBLY INSTRUCTIONS

Please read the instructions carefully for correct and safe assembly.

1

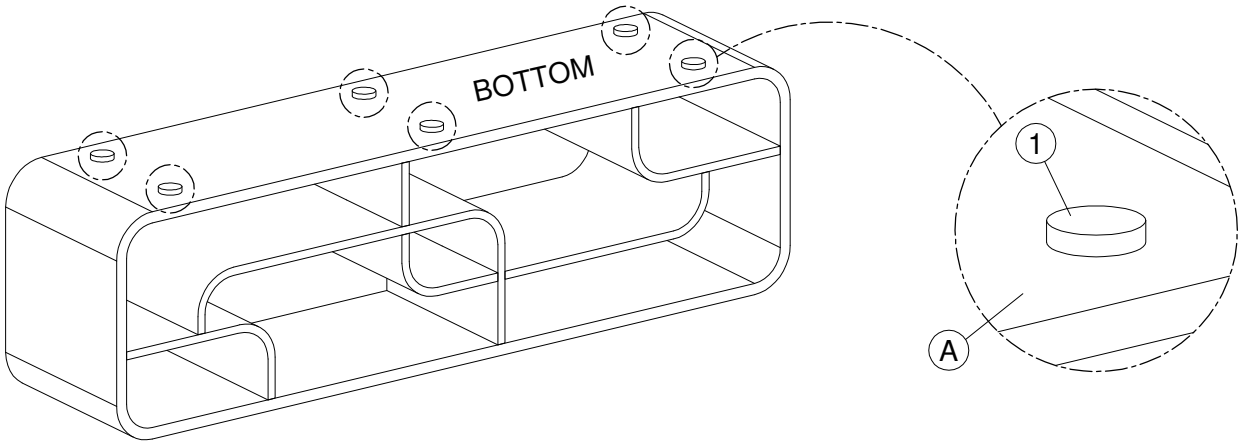

2

COMPLETE

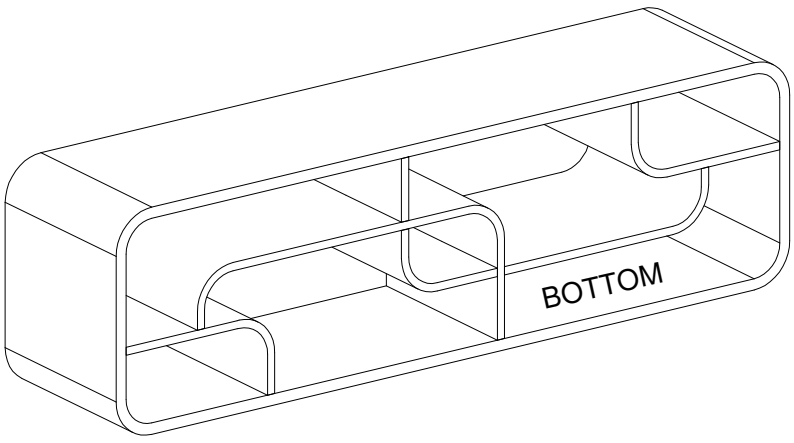

Thank you for purchasing this Zuiver product.