zuiver

Name product SHELF HOGAR
Article number 1001488,1001489

ASSEMBLY INSTRUCTIONS

Please read the instructions carefully for correct and safe assembly.

1

Ⓐ LEG 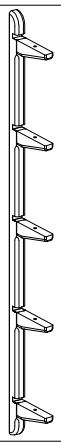 X2

2

Ⓑ SHELF 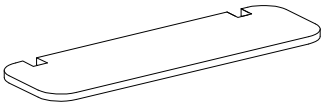 X5

3

01	PAN HEAD SCREW Ø4x38		X4
02	NYLON WALL PLUG		X4
03	ROUND HEAD SCREW Ø4x30		X10
04	JCBC M6x45	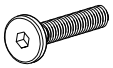	X10
05	SPRING WASHER		X10
06	FLAT WASHER		X10
07	ALLEN KEY		X1

PHILLIPS HEAD SCREWDRIVER TOOL NEEDED
(NOT INCLUDED)

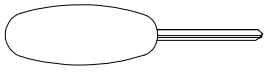

Thank you for purchasing this Zuiver product.

zuiver

Name product SHELF HOGAR
Article number 1001488,1001489

ASSEMBLY INSTRUCTIONS

Please read the instructions carefully for correct and safe assembly.

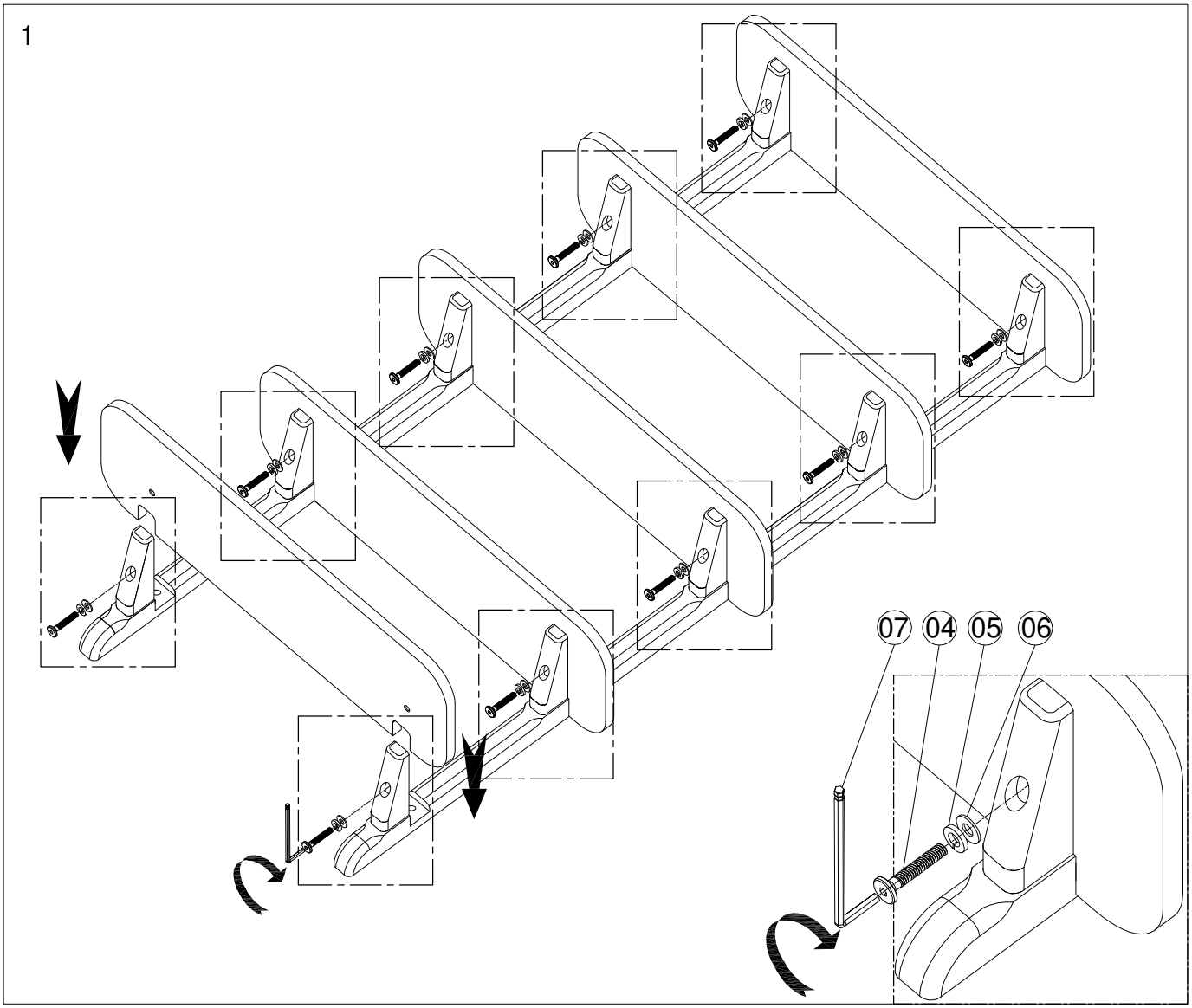

Thank you for purchasing this Zuiver product.

zuiver

Name product SHELF HOGAR
Article number 1001488,1001489

ASSEMBLY INSTRUCTIONS

Please read the instructions carefully for correct and safe assembly.

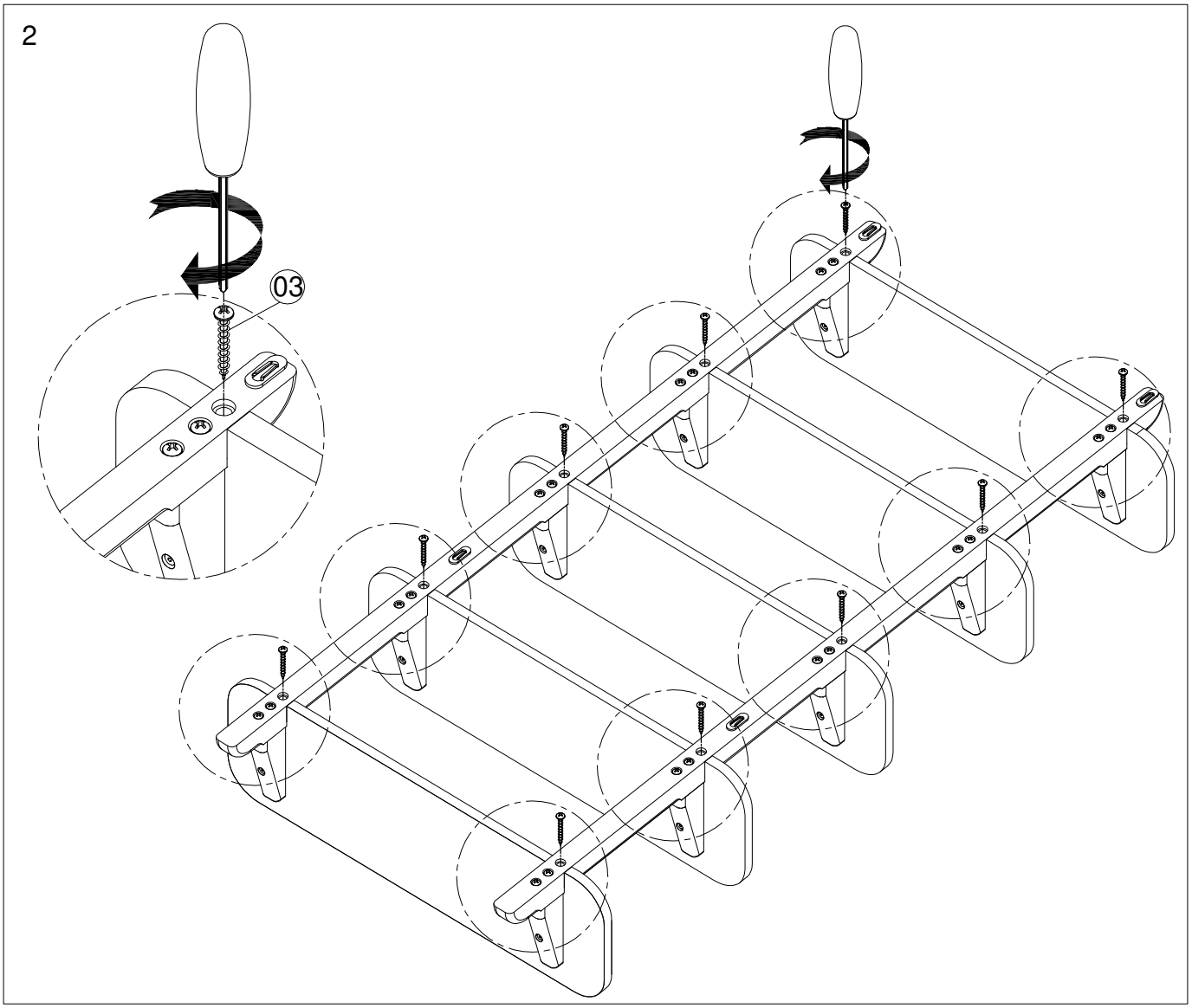

Thank you for purchasing this Zuiver product.

zuiver

Name product SHELF HOGAR
Article number 1001488,1001489

ASSEMBLY INSTRUCTIONS

Please read the instructions carefully for correct and safe assembly.

3

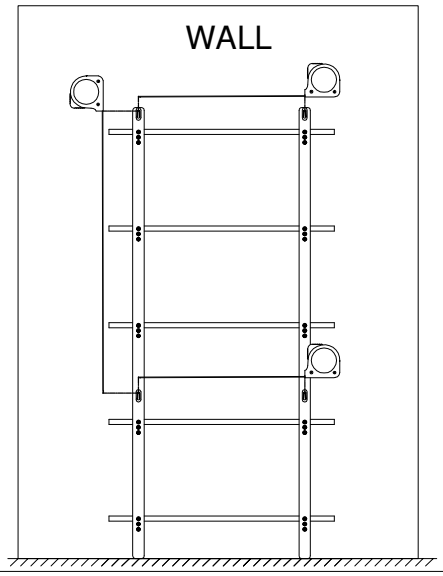

4

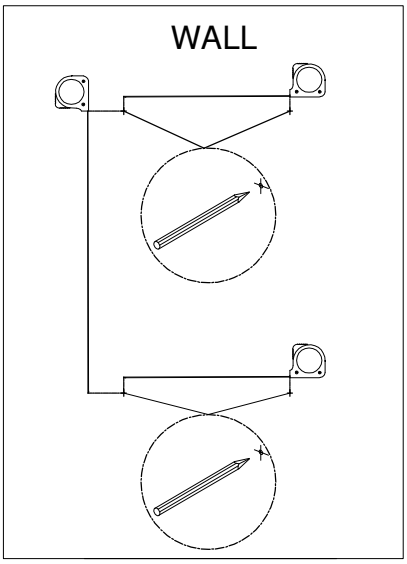

5

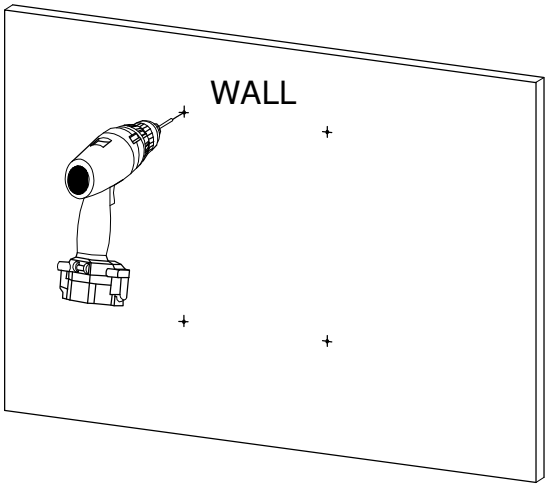

6

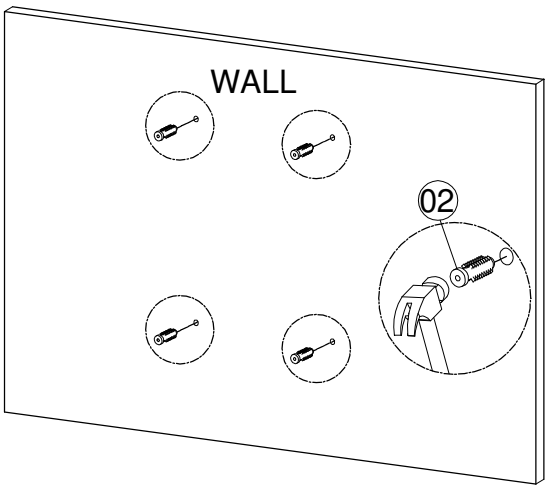

Thank you for purchasing this Zuiver product.

zuiver

Name product SHELF HOGAR
Article number 1001488,1001489

ASSEMBLY INSTRUCTIONS

Please read the instructions carefully for correct and safe assembly.

7

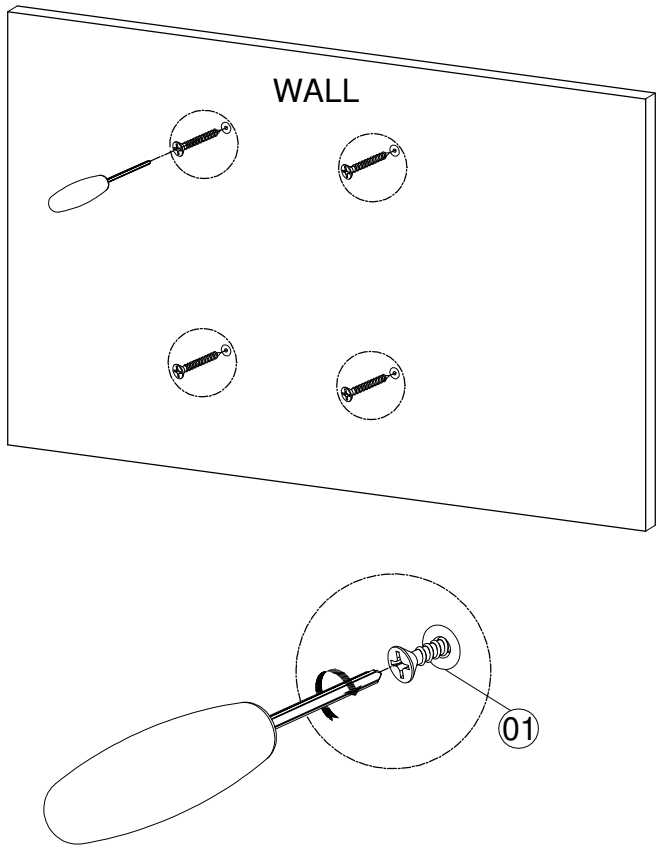

8

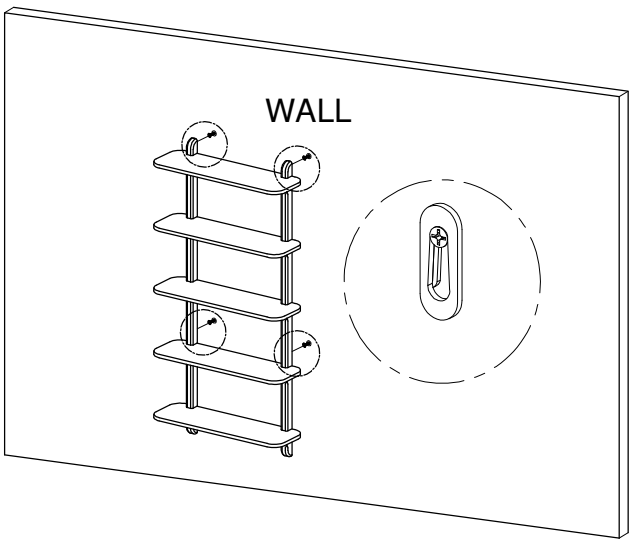

Thank you for purchasing this Zuiver product.