MOMENTUM 5

Wireless around-ear headphones
Model: M5AEBT

Instruction manual

Use the search function, the navigation (left) or the following links:

Start
“Product overview”
“Getting started”
“Using the headphones”
“FAQ/If a problem occurs...”
“Specifications”

Sonova Consumer Hearing GmbH
Im Heidkampe 9
30659 Hannover
Germany
www.sennheiser-hearing.com

Version: 05/26 A01

Important safety instructions

- ▷ Read this instruction manual carefully and completely before using the product.
- ▷ Always include this instruction manual when passing the product on to third parties.
- ▷ Do not use the product if it is obviously defective or makes loud, unusual (whistling or beeping) noise.
- ▷ Only use the product in environments where **Bluetooth**® wireless transmission is permitted.

Preventing damage to health and accidents

- ▷ Protect your hearing from high volume levels. Permanent hearing damage may occur if headphones are used at high volume levels for long periods of time. Sennheiser headphones sound exceptionally good at low and medium volume levels.
- ▷ Do not use the product in an environment that requires your special attention (e.g. in traffic). Especially the product's active noise cancellation can make ambient noise inaudible or drastically change the perception of acoustic warning signals.
- ▷ The product generates stronger permanent magnetic fields that could cause interference with cardiac pacemakers, implanted defibrillators (ICDs) and other implants. Always maintain a distance of at least 3.94"/10 cm between the product component containing the magnet and the cardiac pacemaker, implanted defibrillator, or other implant.
- ▷ Do not use the product near water and do not expose it to rain or moisture to reduce the risk of fire or electric shock.
- ▷ Keep the product, accessories and packaging parts out of reach of children and pets to prevent accidents. Swallowing and choking hazard.
- ▷ Only charge rechargeable batteries that meet the requirements listed in the "Specifications".
- ▷ Do not use external power supply that can deliver more than 20 V or 60 W.

Preventing damage to the product and malfunctions

- ▷ Always keep the product dry and do not expose it to extreme temperatures (hairdryer, heater, extended exposure to sunlight, etc.) to avoid corrosion or deformation. The normal operating temperature is from 0 °C to 40 °C/32 °F to 104 °F.
- ▷ Do not use the product if it is obviously damaged, if it has been dropped, or if liquids or objects have entered the product. In this case, contact a qualified specialist workshop or your Sonova Consumer Hearing partner to have the product checked.
- ▷ To avoid loud, unusual (whistling or beeping) noise and to ensure proper noise cancellation, do not cover the microphone openings of the active noise cancellation circuitry located on the outside of the ear cups.
- ▷ Do not use if immersed into liquid.
- ▷ We recommend to use only attachments/accessories/spare parts supplied or recommended by Sonova Consumer Hearing.

- ▷ Use the product with care and store it in a clean, dry and dust-free environment.
- ▷ Clean the product only with a soft, dry cloth.

Safety instructions for Lithium rechargeable batteries

WARNING

If abused or misused, rechargeable batteries may leak. In extreme cases, they may even present a risk of:

- explosion
- heat and fire development
- smoke and/or gas development
- damage to health and/or the environment

	Keep away from children. • Keep small cells and batteries which are considered swallowable out of the reach of children. • Swallowing may lead to burns, perforation of soft tissue, and death. Severe burns can occur within 2 hours of ingestion. • In case of ingestion of a cell or battery, seek medical assistance immediately.
	In the event of a cell leaking, do not allow the liquid to come into contact with the skin or eyes. In case of contact, wash the affected area with copious amounts of water and seek medical assistance immediately.
	Leaving a battery in a low air pressure environment may result in an explosion or the leakage of flammable liquid or gas.
	Mechanical deformation of a battery, including compression, impact, cutting or puncture, may result in an explosion.
	Do not charge the product/rechargeable batteries in a damp environment. Make sure that the charging socket is free from moisture and contamination.
	Do not mutilate or dismantle.
	Pack/store charged rechargeable batteries so that the terminals cannot contact each other to avoid danger of fire hazard.
	Only charge rechargeable batteries at ambient temperatures between 10 °C and 40 °C/50 °F and 104 °F.
	Avoid prolonged skin contact with the product, rechargeable battery, charger or charging cable when connected to a power source. These components can heat up during charging and cause skin irritation.
	Sonova Consumer Hearing recommends using batteries that are compatible with all technical specifications provided by Sonova and approved to local regulation(s). Replacing with a non-compatible battery can defeat a safeguard.

	Do not expose to moisture.
	Observe correct polarity.
	Switch rechargeable battery-powered products off after use.
	Do not heat above 70 °C/158 °F, e.g. do not expose to sunlight or throw into a fire, a hot oven or a high-temperature environment.
	Do not leave the product/rechargeable batteries unattended while charging.
	Do not continue using defective or swollen rechargeable batteries and dispose of them immediately.
	Ensure disposal of batteries at special collection points or return them to your specialist dealer to facilitate recycling.
	When not using rechargeable batteries for extended periods of time, charge them regularly (about every three months).

Notes on data collection and processing and on firmware updates

This product stores individual settings such as the volume, the sound profiles and the Bluetooth connection data of paired devices. This data is required for the operation of the product and is not transferred to Sonova Consumer Hearing GmbH or companies commissioned by Sonova Consumer Hearing GmbH and is not processed.

Using the “Sennheiser Smart Control Plus” app, you can update the firmware of the product for free via an Internet connection. If the device on which the app is installed is connected to the Internet, the following data is automatically transferred to and processed by Sonova Consumer Hearing servers in order to provide and transfer suitable firmware updates: hardware identifier, hardware revision number, firmware version of the product, operating system type (Android, iOS) and version, version of the app. The data will only be used as specified and will not be stored permanently. If you do not want this data to be transferred and processed, do not connect to the Internet.

Intended use/Liability

These headphones have been designed as an accessory for Bluetooth compliant devices. They are intended for wireless audio communication such as music playback and phone calls via Bluetooth wireless technology.

It is considered improper use when the product is used for any application not named in the corresponding product documentation.

Sonova Consumer Hearing GmbH does not accept liability for damage arising from misuse or improper use of this product and its attachments/accessories.

Sonova Consumer Hearing GmbH is not liable for damages to USB devices that are not consistent with the USB specifications.

Sonova Consumer Hearing GmbH is not liable for damages resulting from the loss of connection due to flat or overaged rechargeable batteries or exceeding the Bluetooth transmission range.

Before putting into operation, please observe the respective country-specific regulations.

Package contents

MOMENTUM 5 around-ear headphones
Model: M5AEBT

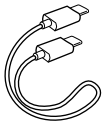

USB C charging cable with 2x USB C connector, approx. 1.2 m

Analog audio cable with 3.5 mm jack plug and 2.5 mm jack plug, length approx. 1.2 m

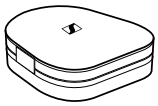

Carry case

Quick guide

Safety guide

Compliance sheet

Online you can find:

- this detailed instruction manual and additional information (www.sennheiser-hearing.com/download)
- the Sennheiser Smart Control Plus app for configuring the headphones and for additional functions (www.sennheiser-hearing.com/smart-control-plus-app)
- a list of accessories on the MOMENTUM 5 product page at global.sennheiser-hearing.com/products/momentum-5-wireless
  (to purchase online or contact your local Sonova Consumer Hearing partner: global.sennheiser-hearing.com/pages/support)

Product overview

MOMENTUM 5

Model: M5AEBT

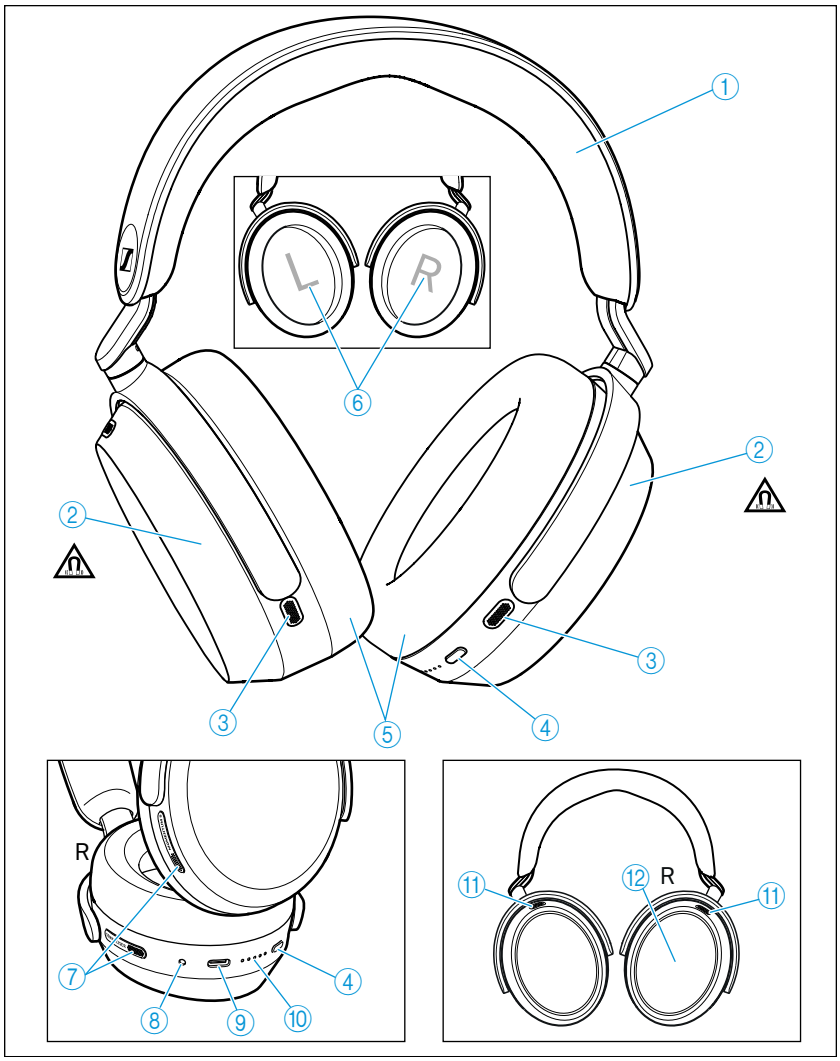

1	Headband, steplessly adjustable
2	Ear cups
3	Back microphones
4	Multi-function button of the headphones: • On/off button • Voice assistant button • Pairing button: pressing for 5 seconds activates the Bluetooth pairing mode
5	Ear pads
6	Marking for the right ear (R) and for the left ear (L) (inside the ear cups)
7	Front speech microphones (2 pcs.) for phone calls

⑧ Input for analog audio cable, 2.5 mm;
when a cable is connected, flight mode is activated/
Bluetooth is deactivated

⑨ USB C socket for charging, calling, streaming via PC/Mac

⑩ LED display

⑪ Microphones for Active Noise Cancellation (ANC);
4x directed outward, 4x directed inward (not visible)

⑫ Touch pad (outside of the right ear cup)

Overview of the smart control

Gesture control via the touch pad

- Tapping

- Horizontal swipe

- Vertical swipe

- Stretch

- Pinch

You can also deactivate the touch pad function (see page 33).

The headphones are equipped with a sensor that automatically detects whether the headphones are worn or taken off from your ears (Smart Pause function). You can find more information here: see page 32.

Overview of the LED display

During operation

LED		Meaning/headphones...
3x	white flashes 3x	... switch on.
		... are connected to a device via Bluetooth.
3x	red flashes 3x	... switch off.

During charging

LED		Meaning
	1 red	Rechargeable battery is almost empty (less than 2% charged)
	1 white	Rechargeable battery is approx. 2-20% charged (>1 hour of playback time)
	2 white	Rechargeable battery is approx. 20-40% charged (>12 hours of playback time)
	3 white	Rechargeable battery is approx. 40-60% charged (>24 hours of playback time)
	4 white	Rechargeable battery is approx 60-80% charged (>36 hours of playback time)
	5 white	Rechargeable battery is approx. 80-100% charged (>48 hours of playback time)
	5 white	Rechargeable battery is 100% charged (up to 60 hours of playback time)

If the LED display does not light up:

- Clean the charging socket (see page 37).
- Charge the rechargeable battery until the LED display lights up again for at least 30 minutes (see page 15). If the rechargeable battery is completely discharged, it may take several minutes for the LED display to indicate the charging process.

Overview of voice/tone prompts

The headphones output voice prompts and tone prompts in case of various events.

You can adjust the settings of voice/tone prompts via the Smart Control Plus app (see page 33).

Voice prompt	Meaning/headphones...
Establishing a Bluetooth connection	
“Connected”	...are connected via Bluetooth.
“No connection”	... have lost the Bluetooth connection to a paired device.
“Pairing successful”	... have successfully completed Bluetooth pairing.
“Pairing failed”	... have not successfully completed Bluetooth pairing.
Information on battery status and volume	
“Recharge headset”	... have an empty rechargeable battery. Charge the rechargeable battery (see page 15).
“Volume min”	... have reached the minimum volume setting.
“Volume max”	... have reached the maximum volume setting.
“Mute on”	... mute the microphone.
“Mute off”	... activate the microphone again.

You will hear tone prompts when the headphones

- are switched on or off,
- are put on or taken off,
- Dolby Atmos activated or deactivated,
- are in pairing mode (melody tone),
- detect devices in the pairing list,
- cancel the pairing process,
- receive a gesture via the touch pad (increasing the volume, starting/pausing music playback, accepting/holding/rejecting calls, adjusting the ANC function or the Transparency Mode).
- receive an incoming call (user device’s ringtone),
- are connected to a device via the audio cable or USB cable,
- are disconnected from the connection via the audio cable or USB cable.

Getting started

1. Charging the rechargeable battery

The headphones' rechargeable battery is not fully charged upon delivery.

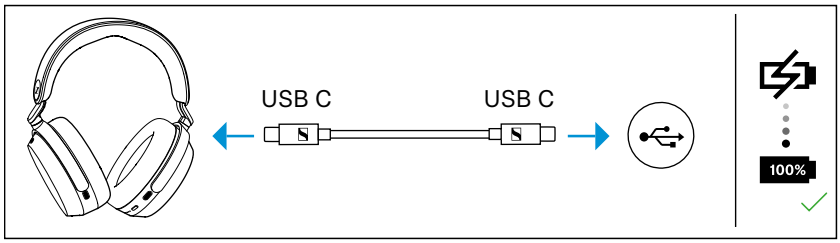

▷ Before using the headphones for the first time, charge the rechargeable battery for a complete charging cycle without interruption (see page 15).

2. Connecting the headphones to a Bluetooth device

▷ Connect the headphones to your smartphone via Bluetooth (see page 16).

3. Sennheiser Smart Control Plus app for your smartphone

The **Sennheiser Smart Control Plus app** allows you to use all functions and settings of the headphones, such as tailoring the audio to your preference using the equalizer (see page 20).

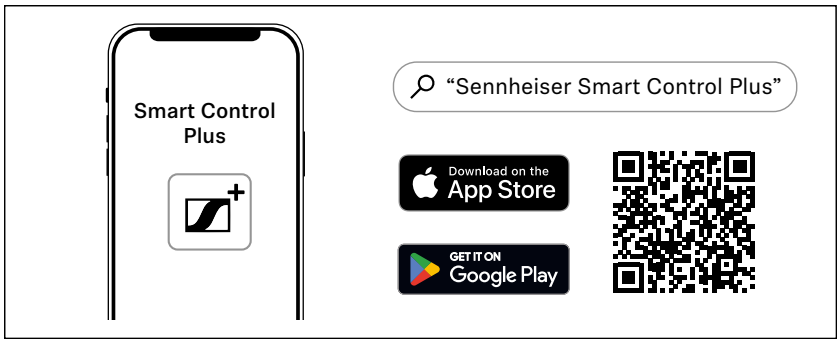

4. Putting the headphones on and adjusting the headband

To ensure optimal sound quality and lasting wearing comfort, adjust the headband to fit the shape of your head for a secure and personalized fit (see page 21).

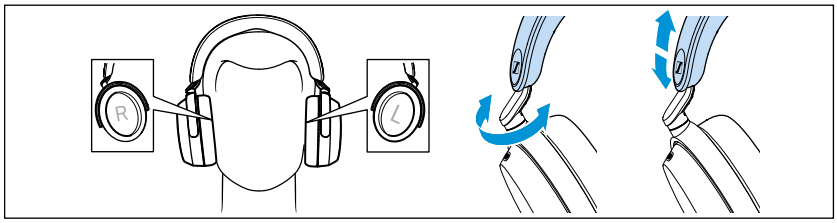

Using the headphones

Information on the rechargeable battery and the charging process

The headphones have a replaceable, rechargeable battery. A complete charging cycle takes approx. 2 hours. The charging time can vary depending on the power source used and the ambient temperature. Before using the headphones for the first time, charge the rechargeable battery for a complete charging cycle without interruption.

When the headphones are being charged, the LED display lights up (see page 9). Once the headphones are fully charged, the LEDs flash white for approx. 5 minutes and then go off. When the battery charge drops to a low level, the voice prompt “Recharge headset” asks you to recharge the headphones. If the headphones are not charged, the voice prompt will be repeated every 10 minutes until the headphones switch off.

The quick charge function gives you approx. 7 hours of playback time after 10 minutes of charging. The charging time can vary depending on the power source used and the ambient temperature.

Sonova Consumer Hearing recommends using the supplied USB cable and a compatible standard USB power supply for charging the headphones. Only use high-quality USB charging cables with USB-IF certification.

While the headphones are being charged, you can still listen to music or make phone calls. In this case, however, the charging time may be longer.

At the end of the product’s operational lifetime, the rechargeable battery has to be removed and disposed separately (see page 38). The product and the battery must be disposed of separately from normal household waste. You can find more information here: see page 46.

Charging the headphones' rechargeable battery

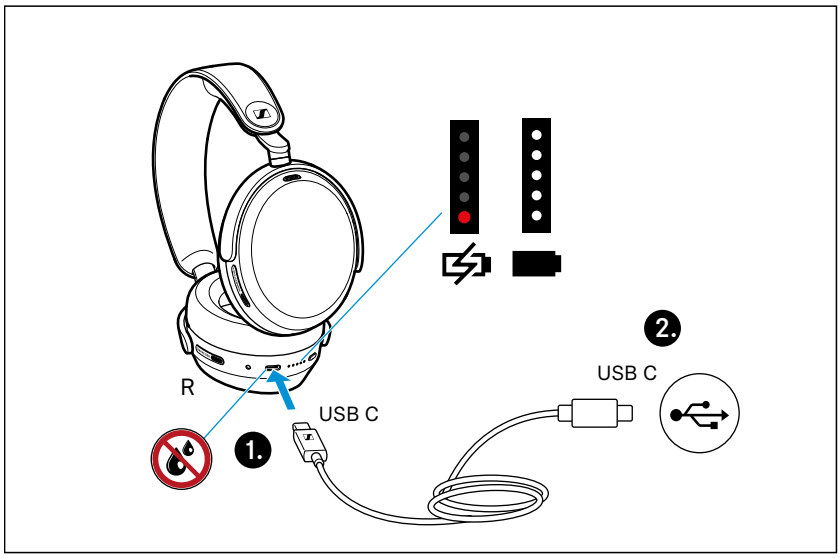

1. Make sure that the charging socket is free from moisture and contamination. Connect the USB C connector of the charging cable to the USB socket of the headphones.
2. Connect the second USB C connector to a corresponding socket of a USB power source (not included). Ensure the USB power source is properly connected to the power supply system. The headphones will then begin charging. The LED display indicates the charge status.

LED		Meaning
	1 red	Rechargeable battery is almost empty (less than 2% charged)
	1 white	Rechargeable battery is approx. 2-20% charged (>1 hour of playback time)
	2 white	Rechargeable battery is approx. 20-40% charged (>12 hours of playback time)
	3 white	Rechargeable battery is approx. 40-60% charged (>24 hours of playback time)
	4 white	Rechargeable battery is approx. 60-80% charged (>36 hours of playback time)
	5 white	Rechargeable battery is approx. 80-100% charged (>48 hours of playback time)
	5 white	Rechargeable battery is 100% charged (up to 60 hours of playback time)

If the LED display does not light up:

▷ Clean the charging socket (see page 37).

▷ Charge the rechargeable battery until the LED display lights up again (at least 30 minutes) (see page 15). If the rechargeable battery is completely discharged, it may take several minutes for the LED display to indicate the charging process.

You can speed up the charging process by charging the headphones when they are switched off.

If you disconnect the USB connection during or after charging, you will hear a voice prompt informing you of the remaining battery life.

Connecting the headphones to a Bluetooth device

To connect wirelessly via Bluetooth connection, you must pair both devices (headphones and e.g. smartphone). This process is called pairing and only needs to be done once.

If operation differs from the steps mentioned, also refer to the instruction manual of the Bluetooth device you are using.

When powering on the headphones for the first time (with an empty pairing list), they will automatically enter pairing mode.

Information on the Bluetooth wireless connection

The headphones are Bluetooth 5.4 compliant.

if your audio source is compatible with any of the following high-resolution audio encoding methods, music will automatically be played in the highest audio quality: aptX™, aptX™ HD, aptX Lossless™, aptX™ Adaptive or AAC. Otherwise the headphones will play the music in normal audio quality (SBC).

Upon powering on, paired devices will immediately connect via Bluetooth and are ready for use. The headphones will try to connect to the last two connected Bluetooth devices.

The headphones can save the connection profiles of up to six paired Bluetooth devices. However, audio playback is only possible from one device at a time.

If a seventh Bluetooth device is paired to the headphones, the saved connection profile of the least used Bluetooth device will be overwritten. If you want to re-establish a connection with the overwritten Bluetooth device, you have to pair the headphones via Bluetooth again.

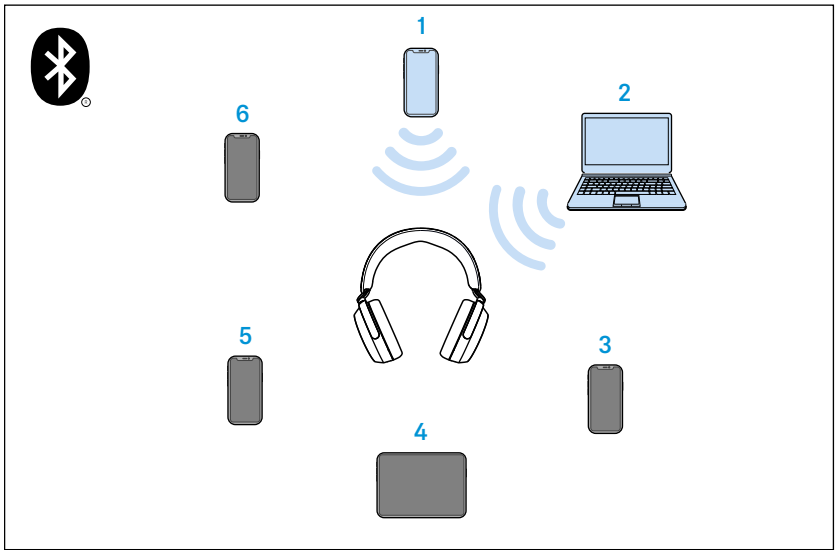

Paired and connected Bluetooth device

Paired Bluetooth device (currently not connected)

Pairing the headphones with a Bluetooth device

When powering on the headphones for the first time (with an empty pairing list), they will automatically enter pairing mode.

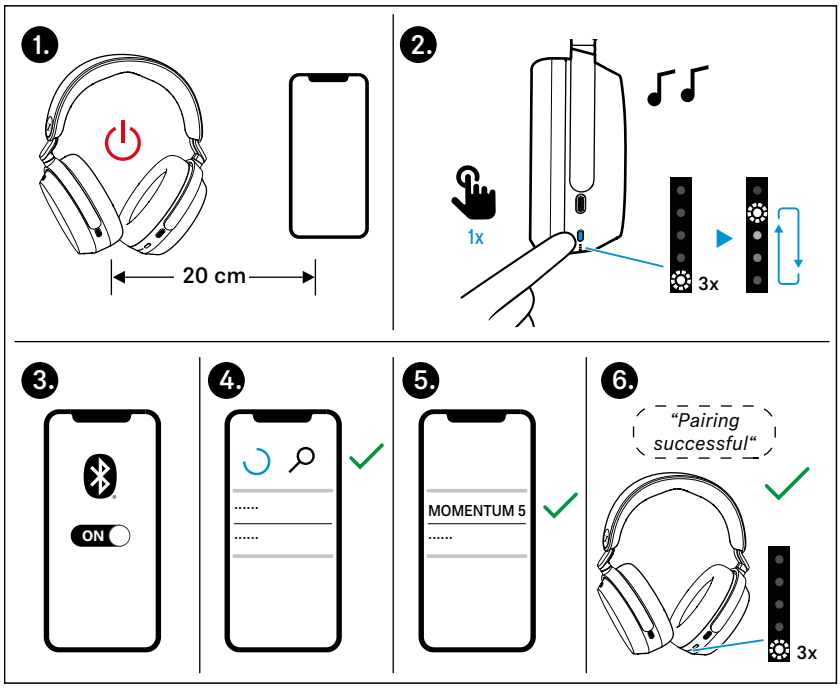

1. Switch the headphones off by pressing the multi-function button for 2 seconds, then place them close to the Bluetooth device (max. 20 cm).
2. Press the multi-function button once to switch the headphones on.
   The headphones will power on and a tone prompt will play. The LEDs will start flashing alternately in white and the headphones will enter pairing mode.
3. Turn on the Bluetooth function on your device.
4. From your device's Bluetooth settings menu, start searching for new Bluetooth devices.
   All active Bluetooth devices in the vicinity of your device will be displayed.

The default name of the headphones is "MOMENTUM 5". However this can be customized to your preference in the Smart Control Plus app (see page 20).

5. From the list of found Bluetooth devices, select "MOMENTUM 5". If necessary, enter the default pin code "0000".
6. If pairing is successful, you will hear the voice prompts "Pairing successful" and "Connected" consecutively. The LED flashes white 3x.

If no connection is established within 2 minutes, pairing mode is canceled and the headphones will enter standby mode. If necessary, repeat the steps described above.

Switching the connection to paired Bluetooth devices/“Connections”

To switch the audio connection to a specific paired Bluetooth device using the “Connections” function, you require the Smart Control Plus app (see page 20).

▷ In the Smart Control Plus app, tap “Connections”.
The list of Bluetooth devices paired with the headphones appears.

▷ From the list, select the paired device to which you want to connect to the headphones. Make sure that the desired device is switched on and Bluetooth is activated.
The Bluetooth audio connection between the desired Bluetooth device and the headphones is established.

The app connection between the device with the Smart Control Plus app installed and the headphones remains active (only Bluetooth Low Energy for communication between app and headphones. The device’s name will be highlighted in bold).

i The “Connections” function also allows you to selectively delete pairing information of devices without resetting the headphones to factory default settings.

Disconnecting the headphones from a Bluetooth device

▷ Via the menu of your Bluetooth device, disconnect the connection to the headphones.
The headphones are disconnected from the Bluetooth device. You will hear the voice prompt “No connection”. The headphones will then switch to standby mode.

i To delete the Bluetooth pairing list of the headphones: see page 42.

Installing the Smart Control Plus app

To make full use of all the settings and functions of the headphones, you need to have the free Sennheiser Smart Control Plus app installed on your smartphone.

▷ Download the app from the Apple App Store or Google Play and install it on your smartphone.
  – Google Play: click
  – Apple App Store: click

Alternatively, you can use your smartphone to scan the QR code or visit the link below:

https://www.sennheiser-hearing.com/smart-control-plus-app

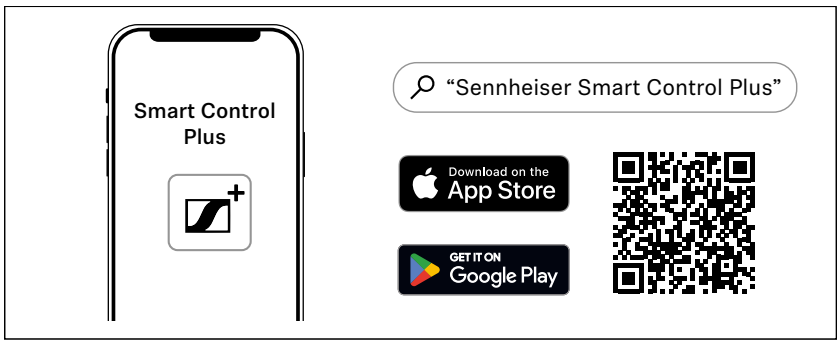

Switching the headphones on

WARNING

Danger due to high volume levels!

Listening at high volume levels can lead to permanent hearing defects.

▷ Before putting the headphones on, adjust the volume to a low level (see page 23).

▷ Do not continuously expose yourself to high volume levels.

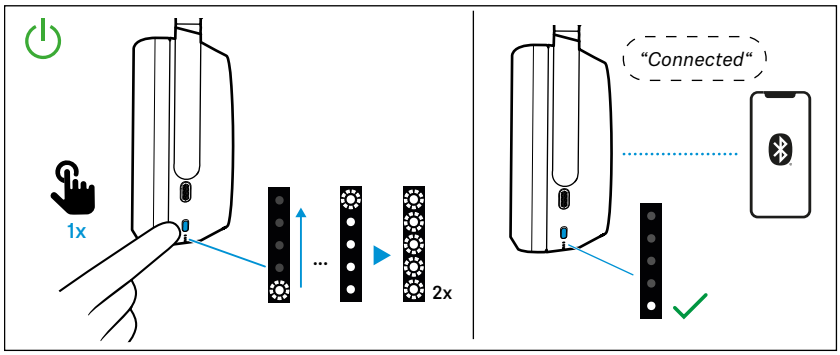

▷ Press the multi-function button 1x.
One LED flashes white 3x. You will hear a tone prompt. If Bluetooth is activated on the headphones and a paired device is available, the LED lights up white and the voice prompt "Connected" will play.

If Bluetooth is deactivated on the headphones (see page 34), you will only hear a tone prompt.The active noise cancellation may be activated (see page 27).

Make sure Bluetooth is already activated on your Bluetooth device when switching on the headphones.

If Bluetooth is activated and the headphones cannot find a paired Bluetooth device within a few minutes, you will hear the voice prompt “No connection”. The LED flashes red 3x. The headphones will then switch to standby mode.

Switching the headphones off

Automatic switch-off

After taking off the headphones, they automatically switch off after 15 minutes. You can adjust the time span using the Smart Control Plus app (see page 20).

The headphones will also automatically switch off when placed in the supplied carry case.

Manual switch-off

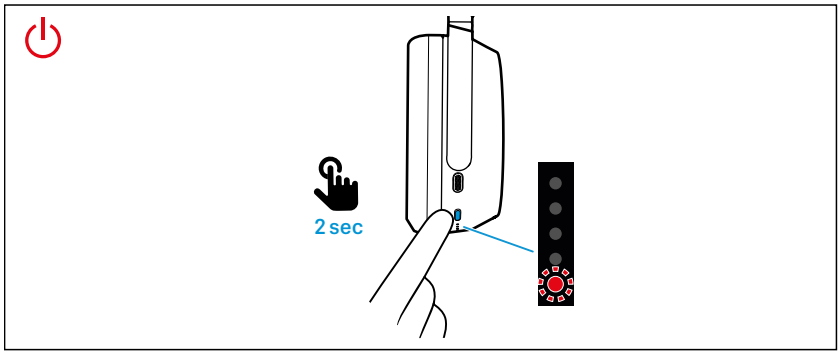

▷ Press the multi-function button for 2 seconds.
You will hear a tone prompt. One LED flashes red 3x. The headphones will then switch off.

Putting the headphones on and adjusting the headband

To ensure optimal sound quality and lasting wearing comfort, adjust the headband to fit the shape of your head for a secure and personalized fit

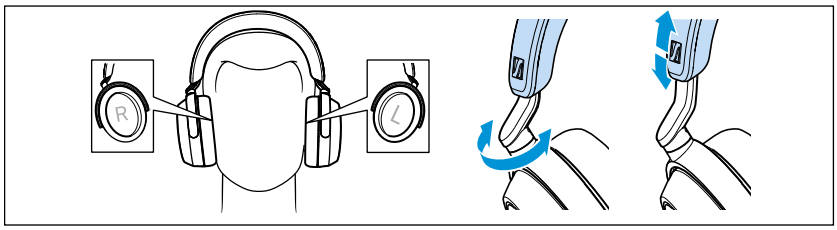

▷ Wear the headphones so that the headband runs over the top of your head. The markings for the right side (R) and for the left side (L) can be found on the inside of the ear cups.

▷ Move the ear cups up or down the headband slider until:
- your ears are comfortably covered by the ear pads,
- you feel even, gentle pressure around your ears,

– a snug fit of the headband on the head is ensured.

For optimal sound quality, the ear pads must completely surround your ears.

Retrieving information on the battery charge status

When the headphones are connected to your Bluetooth device, the battery charge status can be displayed on the screen of your smartphone (depending on the device and operating system used).

The Smart Control Plus app also displays the battery charge status.

On the headphones, you can retrieve information on the battery charge level via voice prompts (also possible while listening to music or talking on the phone, as long as you have the headphones on):

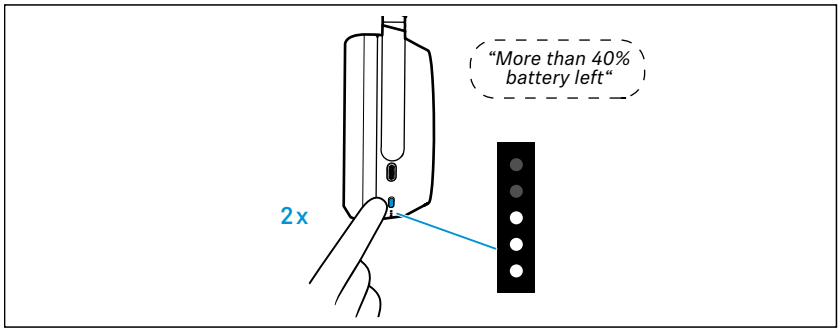

▷ Press the multi-function button 2x.

You will hear a voice prompt informing you of the remaining battery life. Depending on the battery life of the headphones, the LEDs flash or light up.

Voice prompt	Meaning
"Recharge headset"	The rechargeable battery is empty. Charge the rechargeable battery (see page 15).
"More than xx% battery left"	The remaining battery charge is displayed as a percentage.

Adjusting the volume

WARNING

Danger due to high volume levels!

Listening at high volume levels can lead to permanent hearing defects. Toggling between the audio sources may cause enormous volume jumps that can permanently damage your hearing.

- ▷ Before putting the headphones on and before toggling between audio sources, adjust the volume to a low level.
- ▷ Do not continuously expose yourself to high volume levels.

You can adjust the playback volume for music and for phone calls using finger gestures.

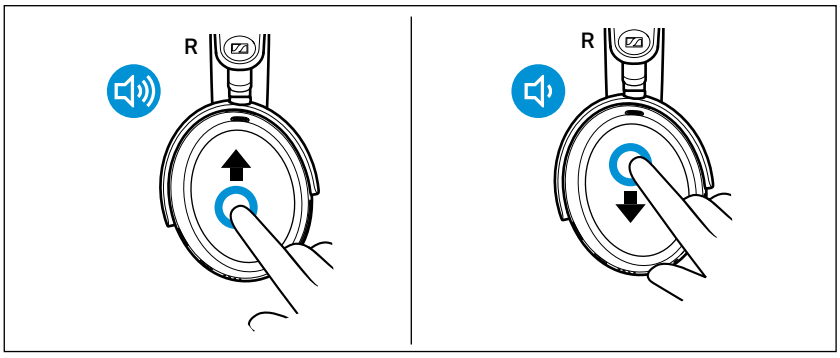

- ▷ If you are playing music, are on a call or if the headphones are in idle mode (i.e. you are neither playing music nor are on a call): Swipe vertically up or down on the touch pad to increase or reduce the volume for music, voice prompts and tone prompts.

When the maximum or minimum volume is reached, you will hear the voice prompt “Volume max” or “Volume min”.

Depending on the length of the swipe motion, you adjust the volume in smaller increments (short swipe motion) or larger increments (long swipe motion).

When switching the headphones off, very high volume levels will automatically reset to a moderate level to protect your hearing when you switch the headphones on again.

i You can also adjust the volume using the connected Bluetooth device.

i If you have activated the voice assistant (see page 31) and then change the volume of the headphones, the volume of the voice assistant will be adjusted accordingly and saved as the default.

Dolby Atmos and Head Tracking

Dolby Atmos for headphones delivers an immersive and precise audio experience. With the introduction of additional layers of dimension, distance and realism, the technology, combined with the head tracking feature, ensures improved accuracy and a true sense of spatial awareness.

You can activate or deactivate Dolby Atmos using the Smart Control Plus app (see page 20). The head tracking feature can also be activated or deactivated separately via the app. When activated, this allows the headphones to detect and respond to head movements for a more accurate and enhanced sense of spatial awareness.

When Dolby Atmos is activated/deactivated, you will hear a tone prompt.

▷ When Dolby Atmos is deactivated, Dolby processing is completely disabled and the headphones will play music or audio in standard stereo without any audio enhancements.

▷ When Dolby Atmos is activated and the Smart Control Plus app is running, the app will take control and decides on which processing method to use:
- **Virtualizer:** Processing directly on the headphones.
- **On-the-phone Calculation:** The audio processing is handled by the smartphone instead for more advanced or dynamic Dolby Atmos rendering.

▷ When Dolby Atmos is activated but the Smart Control Plus app is not running, the headphones will automatically enable the built-in Dolby virtualizer.

Information on Active Noise Cancellation (ANC)

Due to their closed design, the headphones offer effective passive isolation from ambient noise.

In addition, the headphones have an Active Noise Cancellation function, which allows you to reduce ambient noise to a minimum.

Even when Active Noise Cancellation is activated, your headphones' sound quality is always at its best.

You can activate or deactivate Active Noise Cancellation when the headphones are connected to your audio source via Bluetooth or via the audio cable/USB cable (provided that the battery is sufficiently charged).

If you want to create a quiet space in a noisy environment, you can simply use the headphones, without connected cables and without Bluetooth devices, as protection against external noises by using Active Noise Cancellation (see page 27).

With the Smart Control Plus app, you can select different Active Noise Cancellation modes that can provide the optimal settings for your situation.

Notes on active noise cancellation

- Continuous and low-frequency noise, such as motor or fan noise, is particularly well suppressed.
- Speech or high-frequency noise is significantly reduced, but can remain perceptible.

- In very quiet environments, slight noise may occur. In this case, deactivate Active Noise Cancellation.
- If unusual (whistling or beeping) noise occurs, take the headphones off and put them on again. Make sure that the ear cups properly fit around your ears.
- To avoid loud, unusual (whistling or beeping) noise and to ensure proper noise cancellation, do not cover the microphone openings of the active noise cancellation circuitry located on the outside of the ear cups.

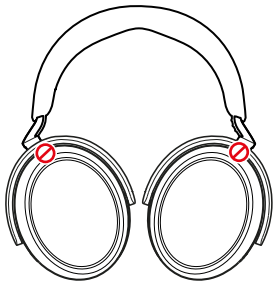

Information on the Transparency Mode – Hearing ambient sounds or conversations

With the Transparency Mode activated, you can hear ambient sounds or communicate without having to remove the headphones (not possible when making phone calls). This allows you to hear e.g. announcements in the train or aircraft or to have short conversations.

By adjusting the intensity of Transparency Mode and Active Noise Cancellation, you can control how much ambient noise reaches your ears, or choose to listen exclusively to your music by setting Active Noise Cancellation to full intensity.

Even at full Transparency Mode intensity, the headphones will always suppress disturbing sounds such as low-frequency noise, allowing you to stay relaxed while remaining aware of your surroundings.

Switching between Active Noise Cancellation (ANC) and Transparency Mode

You can use the gesture control on the touch pad to switch between Active Noise Cancellation and Transparency Mode, e.g. if you want to switch from ambient awareness to idle mode as quickly as possible.

This function is not available during an active call: see page 29.

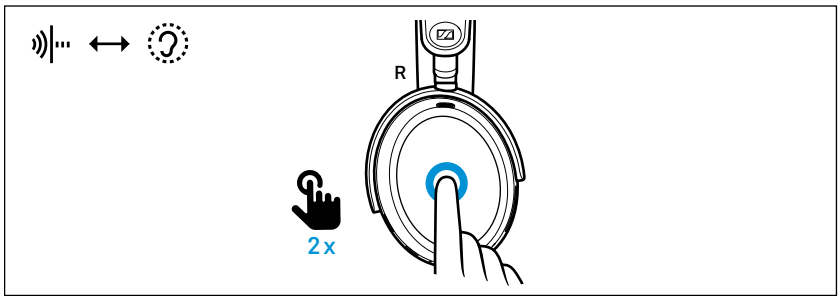

▷ To switch between the modes, tap the touch pad 2x.

The intensity of Transparency Mode and Active Noise Cancellation can be adjusted incrementally (see page 27).

Adjusting the playback pause in the Transparency Mode

You can select the behavior of the audio playback, i.e. how it behaves at maximum intensity of the Transparency Mode (tap the touch pad 2x). To adjust this setting, the Smart Control Plus app is required (see page 20).

▷ In the Smart Control Plus app, select the desired Transparency Mode function in the “Active Noise Cancellation” section:

“Pause on full transparency”	Description
activated*	Audio playback (e.g. music) is muted and you hear only ambient sounds.
deactivated	Audio playback (e.g. music) continues and is mixed with ambient sounds.

*default setting

Increasing/decreasing the effects of Active Noise Cancellation and Transparency Mode

To increase the effects of Active Noise Cancellation and decrease Transparency Mode:

▷ On the touch pad, move your thumb and index finger towards each other.
You will hear a tone prompt. The intensity of the Active Noise Cancellation is increased and ambient awareness is decreased.

To increase the effects of Transparency Mode and decrease Active Noise Cancellation:

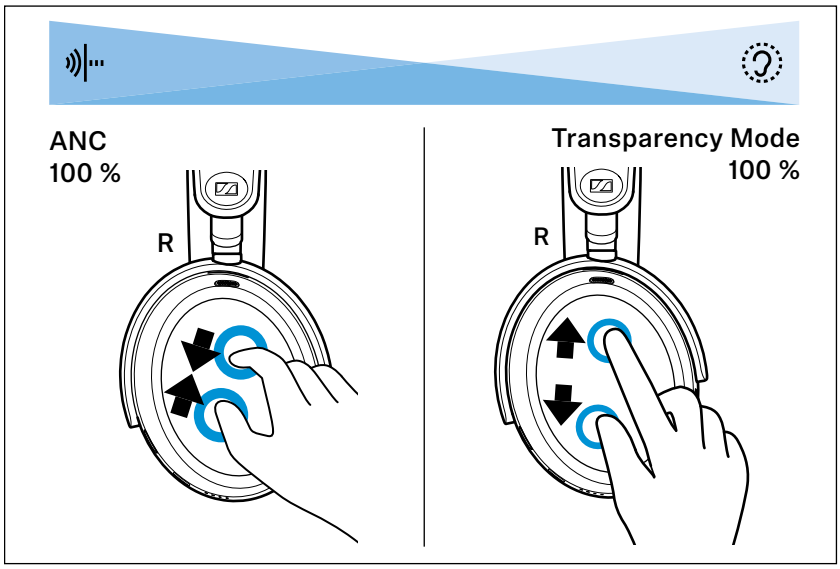

▷ On the touch pad, move your thumb and index finger away from each other.
You will hear a tone prompt. The intensity of the ambient awareness is increased and Active Noise Cancellation is decreased.

You can also adjust the intensity of ANC and Transparency Mode via a slider in the Smart Control Plus app.

Adjusting Active Noise Cancellation (ANC)

To adjust the settings for Active Noise Cancellation, the Smart Control Plus app is required (see page 20).

▷ Select the desired setting in the “Active Noise Cancellation” section of the Smart Control Plus app:

ANC setting	Reduction of low-frequency noise and background noise
“Adaptive”	
activated*	automatic reduction depending on the noise conditions
deactivated	No automatic reduction
“Wind Noise Reduction”	
Off	Wind noise reduction off
Auto*	Automatically adjusted reduction to minimize disturbing wind or movement noise
Max	Maximum wind noise reduction

*default setting

Listening to music using the headphones

You can listen to music by connecting the headphones to your audio source via Bluetooth (see page 16), audio cable (see page 34) or USB (see page 35).

Controlling music playback

The following music functions are only available when the headphones are connected to your device via Bluetooth or USB. Note that some smartphones or music players may not support all functions.

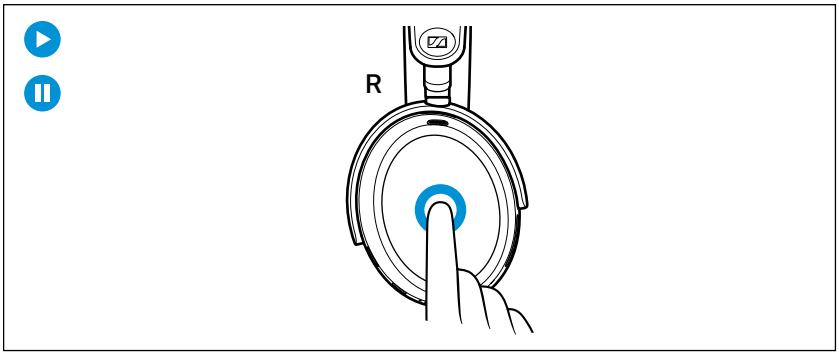

▷ Tap the touch pad.

Touch gesture		Function
	Tap 1x	Plays or pauses music
2x	Tap 2x	Pauses music and switches to idle mode (intensity of the Transparency Mode remains adjustable: see page 27)

If music playback does not start:

- Check if the playback pause is activated in Transparency Mode (see page 27). Deactivate the function if necessary.
- Start the music playback app on your Bluetooth device.

Playing the next/previous track

▷ Swipe horizontally on the touch pad.

Touch gesture		Function
	Swipe forward	Plays the next track in the playlist
+Hold	Swipe forward and hold	*Fast-forwards a track
	Swipe backward	Plays the previous track in the playlist
+Hold	Swipe backward and hold	*Rewinds a track

* only for smartphones or music players that support this function

Making phone calls using the headphones

The following call functions are only available when the headphones, the smartphone or the PC/Mac are connected via Bluetooth (see page 16). Some smartphones or communication apps may not support all functions. During a call, Active Noise Cancellation is always activated to ensure the best possible speech intelligibility. Transparency Mode cannot be used while in a call.

If the headphones are switched off during an active call or if the rechargeable battery is empty, the call will be automatically put on hold. You can then use your smartphone as an audio output device as usual.

Making a call

▷ Dial the desired number on your smartphone.
If your smartphone does not automatically transfer the call to the headphones, select “MOMENTUM 5” as the output device on your smartphone (see the instruction manual of your smartphone if necessary).

Accepting/rejecting/ending a call

If your headphones are connected to a smartphone and you receive a call, you will hear the ringtone on the headphones.

If you are playing music when you receive a call, the music pauses until you end the call or until the call hangs up.

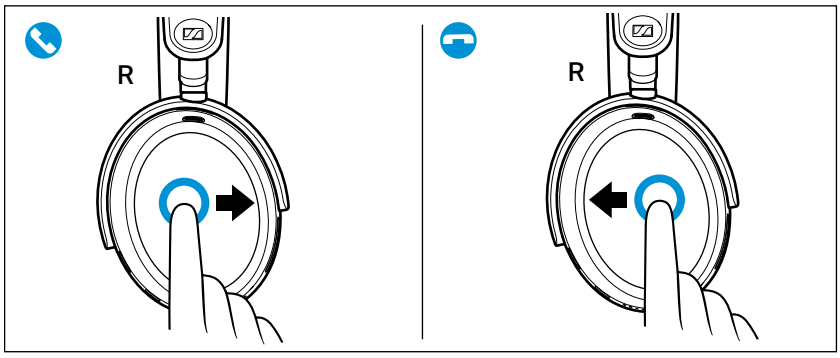

▷ Use the touch pad:

Touch gesture		Function
	Swipe forward	Accepts a call
		Accepts an incoming call and ends the active call
	Swipe backward	Ends a call
2sec	Press for 2 sec	Rejects a call
		Rejects an incoming call and ends the active call
2x	Tap 2x	Puts an active call on hold
		Accepts an incoming call and puts the active call on hold
		Toggles between active call and call on hold

Muting the microphone

To mute the headphones' microphone during a call:

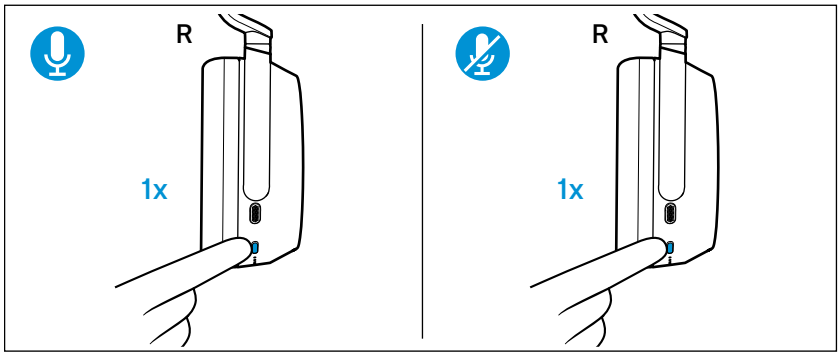

▷ Press the multi-function button 1x.
You will hear the voice prompt "Mute on". The microphone is muted.

To unmute the microphone:

▷ Press the multi-function button 1x.
You will hear the voice prompt “Mute off”. The microphone is unmuted.

Using the Sidetone function

When using the headphones for phone calls, you may find it more comfortable if your own voice is audible in the headphones. With the Sidetone function activated, your own voice is played back through the headphones during a phone call.

Via the Smart Control Plus app, you can activate the function (default setting) and adjust the intensity via a slider or deactivate the function.

Using the voice assistant/voice dialing

The voice assistant is only available when the headphones and the mobile device are connected via Bluetooth or USB. Some smartphones or music players may not support all functions.

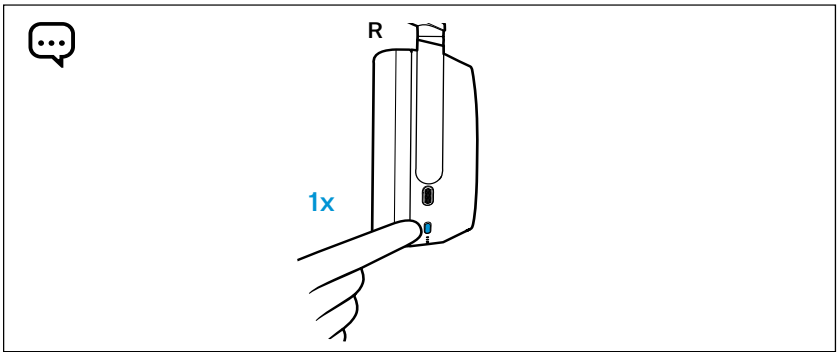

▷ Press the multi-function button 1x.
The voice assistant available on your mobile device is activated. Depending on the system or app installed, this may include Siri, Google Assistant, or others. If no voice assistant is available, voice dialing may be activated instead.

▷ Speak your request.

To cancel the voice assistant or voice dialing:

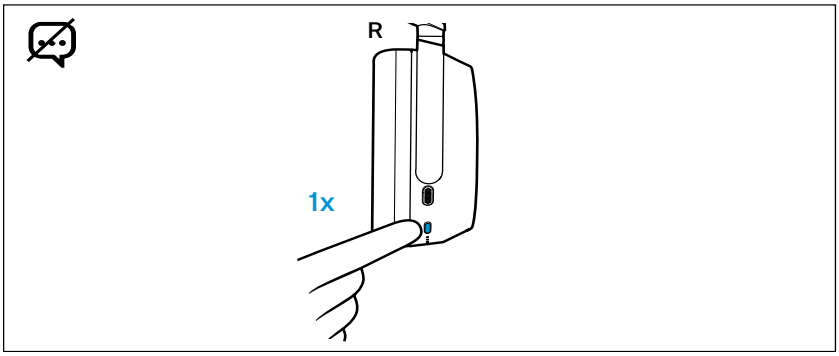

▷ Press the multi-function button 1x.

Using the Smart Pause function

The headphones are equipped with a sensor that automatically detects whether the headphones are worn or taken off from your ears.

You can use the following functions:

- Music playback pauses when you take off the headphones and resumes when you put them on again.
- Putting on the headphones will automatically accept an incoming phone call.
- Taking off the headphones during a call will mute it, and putting them back on will resume the call.

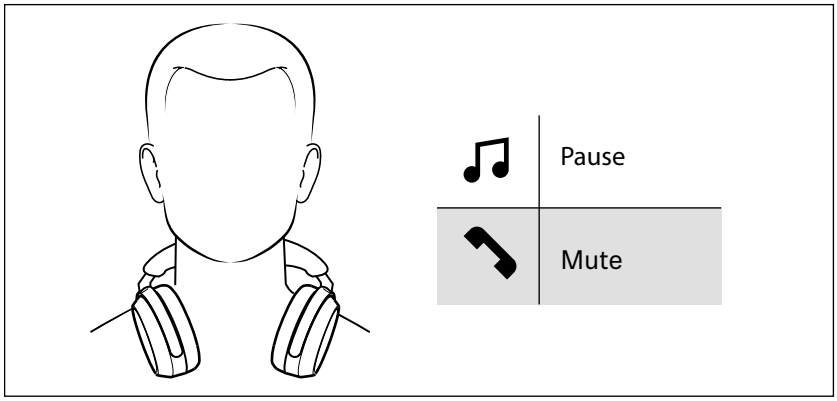

In certain situations, the sensor may not detect that the headphones have been removed, such as when transporting or setting them down while still switched on, e.g.:

- If you place the insides of the ear cups facing down on a table.
- If you wear the headphones around your neck and your chin covers the area inside the ear cups.
- If the insides of the ear cups are covered by objects or by your hands.
- If you hang the headphones over the edge of a bag or carry them inside a bag.
- If you wear the headphones over a cap, scarf, or over your hair.

To avoid problems with the sensor:

▷ Store the headphones in the supplied carry case (see page 36).

▷ Switch off the headphones manually when you store them outside the carry case (see page 21).

You can deactivate the sensor function via the Smart Control Plus app. Please note that doing so will disable all related smart functions, such as automatic switch-off when the headphones are placed in the carry case, or automatic muting when the headphones are removed.

Adjusting sound effects/the equalizer

To use the sound effects/the equalizer, the Smart Control Plus app is required (see page 20).

▷ In the Smart Control Plus app, select the desired sound effects via the equalizer. You can use predefined presets, define sound modes (e.g. bass boost) or define your own settings.
The sound effects are stored in the headphones. These sound settings are active even without using the Smart Control Plus app, i.e. when you are using a different Bluetooth device.

ℹ The Sound Check function in the Smart Control Plus app allows you to create customized equalizer presets, guiding you step by step for optimal results.

Setting the voice/tone prompts

To set voice/tone prompts, the Smart Control Plus app is required (see page 20).

In the app settings, you can activate voice prompts and tone prompts (default setting) or deactivate them completely.

Deactivating the touch pad function

To avoid unintentional entries via the touch pad of the headphones, e.g. when you have put the headphones on while lying down, you can deactivate the touch pad function. To do this, use the Smart Control Plus app (see page 20).

Deactivating Bluetooth/activating flight mode

Deactivate the Bluetooth connection when wireless connections are not permitted, such as on an aircraft during take-off and landing.

Active Noise Cancellation can be fully used provided that the rechargeable battery is sufficiently charged (see page 27).

To deactivate the Bluetooth wireless connection and activate flight mode:

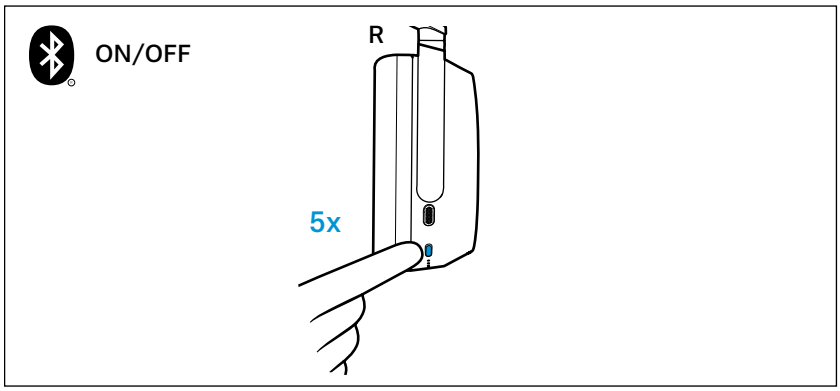

▷ Press the multi-function button 5x.
You will hear the voice prompt “No connection”. The Bluetooth wireless connection is deactivated.

To activate the Bluetooth wireless connection again:

▷ Press the multi-function button 5x.
You will hear the voice prompt “Connected”. The Bluetooth wireless connection is activated.

Connecting the audio cable will also deactivate the Bluetooth connection (see page 34).

If you only want to use the headphones for Active Noise Cancellation during a flight, you can deactivate the touch pad function to avoid unintentional entries (see page 33).

Using the audio cable/activating flight mode

If you connect the audio cable, flight mode is activated and the Bluetooth wireless connection will be deactivated.

Use the audio cable when:

- wireless transmission is not allowed, e.g. during aircraft take-off and landing,
- the headphone’s rechargeable battery is empty,
- your audio source doesn’t offer a Bluetooth connection.

Music control, call management, and voice assistant functions are not available in this mode. Active Noise Cancellation can be fully used provided that the rechargeable battery is sufficiently charged (see page 27).

Connecting the headphones using the audio cable

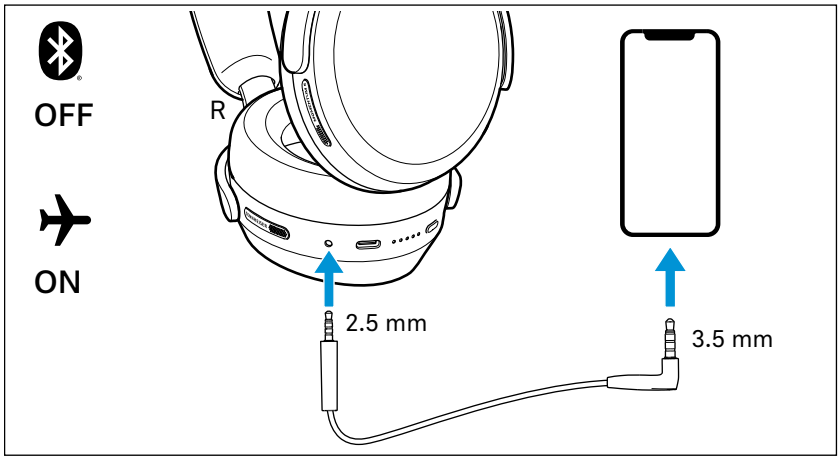

▷ Connect the 2.5 mm jack plug of the audio cable to the headphones’ audio socket.
Flight mode is activated and the Bluetooth wireless connection is deactivated.

▷ Connect the 3.5 mm jack plug to the audio output of your smartphone.

To disconnect the audio cable:

▷ Carefully disconnect the jack plug from the headphones.

Using the in-flight adapter

▷ Connect the 3.5 mm jack plug of the audio cable (see page 34) to the in-flight adapter.

▷ Connect the in-flight adapter to the aircraft's in-flight entertainment system.

If the volume of the headphones is too low, first increase the volume on the in-flight entertainment system.

If you want to increase the volume on the headphones and the volume cannot be increased as usual, restart the headphones by switching them off and on again.

Connecting the headphones using the USB cable

When you connect the headphones to a Mac/PC/mobile device using the supplied USB cable, you can play audio content from your Mac/PC/mobile device directly through the headphones. Only use high-quality USB cables with USB-IF certification to ensure optimum data and power transfer.

The headphones will automatically start charging when you connect them to a Mac/PC/mobile device using the USB cable.

Setting up the headphones as the default audio output and audio input device for your Mac/PC/mobile device

▷ Make sure that possible Bluetooth connections are disconnected.

▷ Connect the headphones and the Mac/PC or mobile device via the USB cable.
The headphones are charged via the USB connection.

▷ From the Systems Preferences or Control Panel of your Mac/PC/mobile device, select "MOMENTUM 5" as the default audio output device and/or default audio input device.

▷ Start music playback from the Mac/PC/mobile device.
The music will be played through the headphones and the microphone will be used for recording.

Storing and transporting the headphones

Store the headphones in the carry case to prevent damage to the headphones when you are not using or transporting them.

If you store or transport the headphones when they are still switched on, the sensor will not detect that the headphones have already been taken off in certain situations, e.g. if you hang them over the edge of a bag or transport them inside a bag.

Information on how to avoid problems with the sensor can be found here: see page 32.

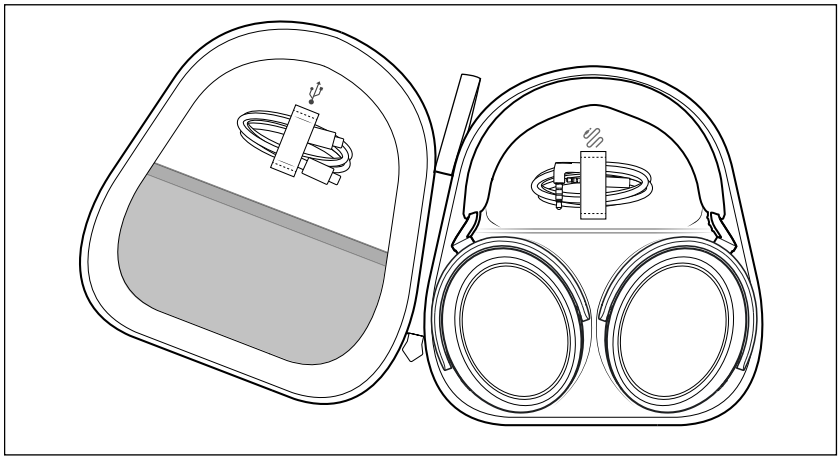

▷ Fold up the headphones and place them in the carry case as shown in the illustration.
The headphones will automatically switch off.

Care and maintenance

Cleaning the products

ATTENTION

Liquids can damage the electronics of the product!

Liquids entering the housing of the product can cause a short-circuit and damage the electronics.

- ▷ Keep all liquids far away from the product.
- ▷ Do not use any solvents or cleansing agents.

- ▷ Clean the parts of the product only with a soft, dry cloth.

To clean the charging socket:

- ▷ Blow vigorously over the charging socket.
- ▷ If necessary, carefully remove any stuck dirt from the charging socket using a dry, soft brush or a dry interdental brush. Only apply gentle pressure when doing so.

Replacing the ear pads

For reasons of hygiene, you should replace your ear pads from time to time. Spare ear pads are available at global.sennheiser-hearing.com/products/momentum-5-wireless (to purchase online or contact your local Sonova Consumer Hearing partner: global.sennheiser-hearing.com/pages/support)

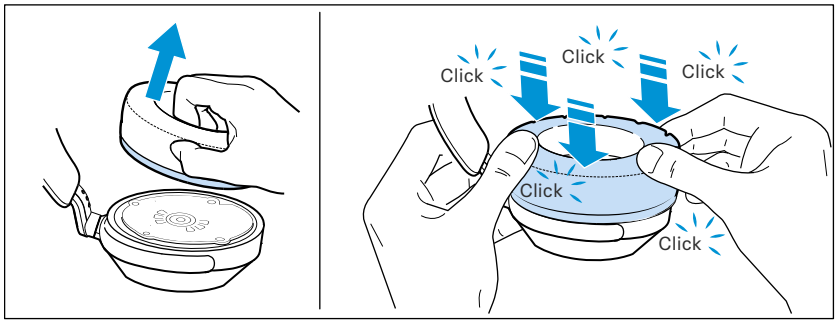

- ▷ Grip the ear pad and loosen the edges all the way around until you can remove the ear pad completely.
- ▷ Place the new ear pad onto the ear cup. The ear pads are not side-specific and can be fitted to either ear cup.
- ▷ Press the new ear pad firmly onto the ear cup, working all the way around until it clicks audibly into place and sits flush with the ear cup.

Replacing the rechargeable battery of the headphones

To extend the service life of the product, the headphones have a rechargeable battery that can be replaced.

ATTENTION

Replacing with a non-compatible battery can defeat safeguard!

The use of non-compatible rechargeable third-party batteries can lead to a limited operating time of the headphones or damage to the product.

▷ Use rechargeable spare batteries supplied or recommended by Sonova Consumer Hearing. We recommend to use original Sennheiser batteries.

▷ If you consider to use batteries from third-party providers, you need to ensure that the batteries comply with all technical specifications as shown in the chapter “Specifications” and are approved to local regulation(s).

The compatible Sennheiser battery is BA 500. It will be available in the EU and further selected countries.

Check global.sennheiser-hearing.com/products/ba-500 for online availability or contact the Customer Service for further information: global.sennheiser-hearing.com/pages/support

Removing the rechargeable battery

Tools required:

- Phillips screwdriver PH0 (not included)

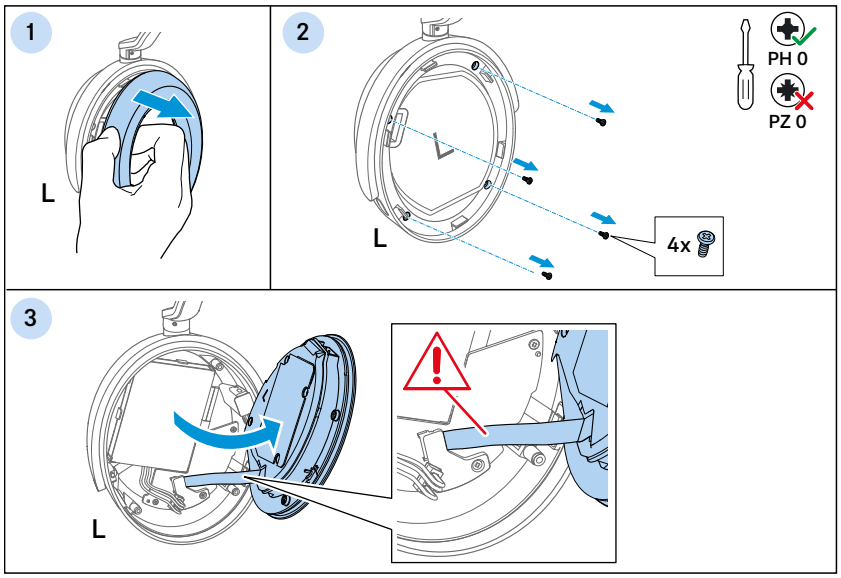

1. Remove the ear pad from the left ear cup to protect it from damage (see page 37).
2. Remove the four Philips head screws from the left ear cup with the screwdriver.
3. **Attention! Risk of damage to the speaker cable. Do not pull the acoustic unit off too far and move it carefully.**
   Open the left ear cup by pulling the acoustic unit upwards.

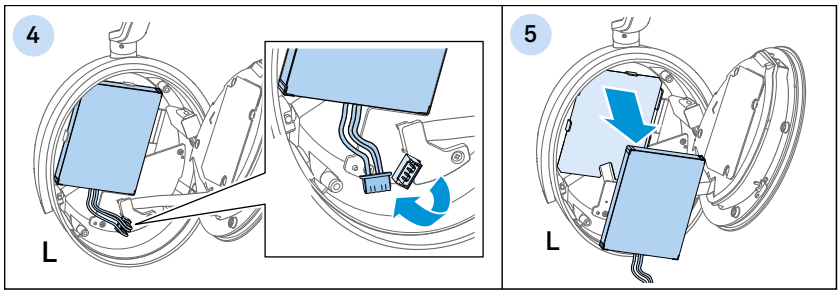

4. Disconnect the battery cable plug from the main circuit board.
5. Remove the rechargeable battery from the battery holder.

Inserting the new rechargeable battery

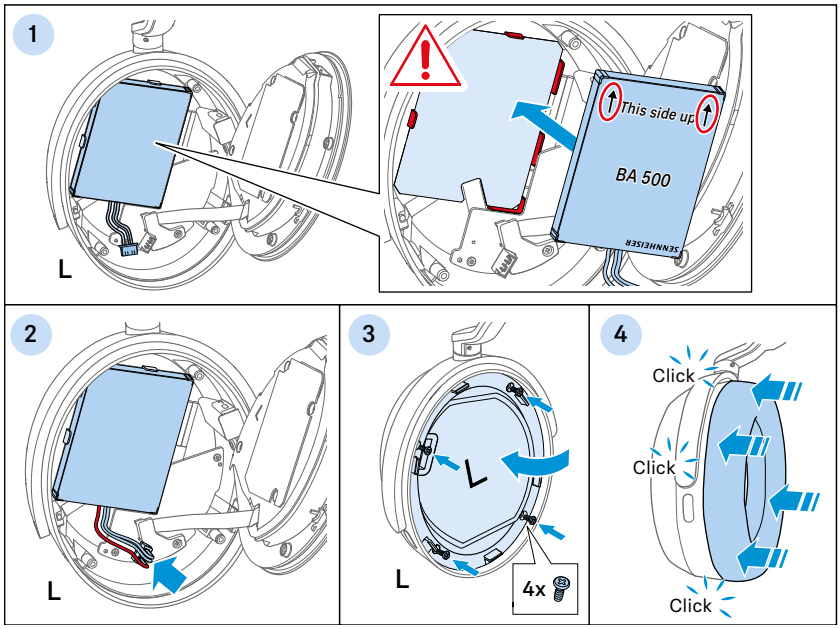

1. Place the rechargeable battery into the holder:
   - Ensure that the battery is correctly aligned. The printed arrows must point upwards, towards the headband.
   - Carefully snap the battery into the edges of the holder.
2. Connect the battery cable plug to the main circuit board.
3. Close the ear cup by putting on the acoustic unit. Attach the acoustic unit by tightening the four Philips head screws.
4. Reattach the ear pad back onto the ear cup (see page 37).

Information on the built-in rechargeable battery

Sonova Consumer Hearing GmbH ensures and guarantees that the rechargeable batteries perform at their optimum upon purchase of the product. If, upon purchase or within the warranty period, you suspect that a rechargeable battery is obviously defective or if a charging error/battery error is displayed (see page 9), stop using the product, disconnect it from the power supply system and contact your Sonova Consumer Hearing partner. Your Sonova Consumer Hearing partner will coordinate the repair/replacement with you.

Do not return a product with a defective battery to your dealer or Sonova Consumer Hearing partner unless requested to do so. To find a partner in your country, search at global.sennheiser-hearing.com/pages/support.

At the end of its operational lifetime, this product with its built-in rechargeable battery must be disposed of separately from normal household waste. You can find more information here: see page 46.

Installing firmware updates

Firmware updates can be downloaded free of charge from the Internet using the Sennheiser Smart Control Plus app. Sonova Consumer Hearing recommends to always install the latest firmware version to ensure the best performance of your product.

- ▷ Connect the headphones to your smartphone and start the Smart Control Plus app (see page 20).
- ▷ The app provides information on available firmware updates and guides you through the installation process.

FAQ/If a problem occurs...

If a problem has occurred, proceed in the following order until the problem is solved and you can use the headphones again:

1. Press the multi-function button for 15 seconds (reset) (see page 42).
2. Connect the headphones to the Smart Control Plus app to install the latest firmware (see page 40).
3. Reset the headphones to the factory default settings (see page 42).
4. Check the list of frequently asked questions to see if there is a solution to the problem (see page 41).
5. Contact your Sonova Consumer Hearing partner to solve the problem (see page 41).

Current list of frequently asked questions (FAQ)

Visit the MOMENTUM 5 product page at www.sennheiser-hearing.com/download.

There you will find a current list of frequently asked questions (FAQ) and suggested solutions.

Your question has not been answered or the problem persists?

If a problem occurs that is not listed in the FAQ section or if the problem cannot be solved with the proposed solutions, please contact your Sonova Consumer Hearing partner for assistance.

To find a partner in your country search at global.sennheiser-hearing.com/pages/support.

Leaving the Bluetooth transmission range

Wireless calling and streaming are only possible in the Bluetooth transmission range of your smartphone. The transmission range largely depends on environmental conditions such as wall thickness, wall composition etc. With a free line of sight, the transmission range of most smartphones and Bluetooth devices is up to 10 meters.

If you, and therefore the headphones, leave the Bluetooth transmission range of the smartphone, the sound quality deteriorates increasingly until you hear the voice prompt “Lost connection” and the connection breaks down completely. If you immediately re-enter the Bluetooth transmission range, the connection is automatically re-established.

Resetting the headphones

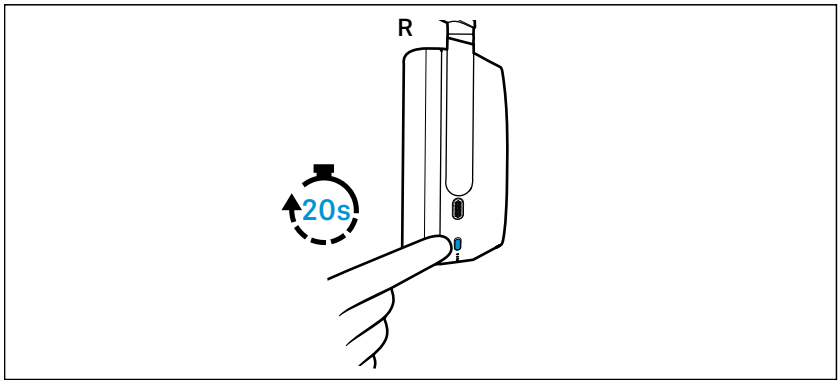

If the function of the headphones is disturbed, perform a reset. Individual settings such as the pairing settings are not deleted.

▷ Press the multi-function button for 20 seconds.
You will hear a tone prompt for confirmation.

Deleting the Bluetooth pairing list of the headphones

You can delete the Bluetooth pairing list using the Smart Control Plus app. Follow the instructions in the app.

Resetting the headphones to the factory default settings

To be able to reset the headphones to the factory default settings, the Smart Control Plus app is required (see page 20).

▷ Switch on the headphones (see page 20) and connect them to a Bluetooth device on which the Smart Control Plus app is available.

▷ Select the “Factory default settings” function in the app settings.

▷ Follow the instructions in the app.

Specifications

Model: M5AEBT

Wearing style	headband stereo headphones
Ear coupling	around-the-ear, circum-aural
Transducer principle	dynamic
Transducer	42 mm
Frequency response	6 Hz to 22,000 Hz (–10 dB)
Sound pressure level (SPL)	106 dB (1 kHz/0 dBFS)
THD	< 0.2 % (1 kHz, 100 dB SPL)
Microphone principle	MEMS
Microphone frequency response	50 Hz to 10 kHz (–3 dB)
Microphone pick-up pattern (speech audio)	4 omni-directional microphones 2x2-mic beamforming array
Power supply	replaceable, rechargeable lithium-polymer battery: 3.7 V⎓, 700 mAh, 2.59 Wh USB charging via USB C socket: 5 V⎓, 800 mA max.
Charging time of rechargeable battery	approx. 2 hrs
Operating time	up to 57 hrs (music playback via Bluetooth with ANC activated; test condition: iPhone, mid volume level)
Temperature range	*operation:* 0 °C to +40 °C *charging:* +10 °C to +40 °C *storage:* –20 °C to +60 °C
Relative humidity (non condensing)	*operation:* 10 to 80 % *storage:* 10 to 90 %
Weight (headphones)	approx. 290 g
Magnetic field strength	6.3 mT

Bluetooth

Version	Bluetooth 5.4 compliant, class 1
Transmission frequency	2,402 MHz to 2,480 MHz
Modulation	GFSK, π/4 DQPSK, 8DPSK
Profiles	A2DP, AVRCP, HFP, HSP, GATT
Output power	10 mW (max)
Codec	SBC, AAC, aptX™, aptX™ HD, aptX lossless™, aptX™ Adaptive
Device name	MOMENTUM 5 (individually adjustable) LE-MOMENTUM 5 (Bluetooth Low Energy only)
Number of active connections	2

Compatible battery (BA 500)

Nominal voltage	3.7 V ⎓
Minimum capacity	700 mAh
Discharge current	0.2 C
Discharge cut-off voltage	3.0 V
Discharge temperature range	-20 to 60°C
Charging end voltage	4.2 V
Charging current (3.0 – 4.2 V)	1.0 C (15 – 45°C), 0.2 C (0 – 15°C)
Charging current (<3.0 V)	0.2 C
Charge cut-off current	0.05 C
Charge temperature range	0 to 45°C
Mechanical dimensions	51.0 mm (±0.2 mm) x 38.5 mm (±0.2 mm) x 5.1 mm (±0.2 mm)
PCM - Protection Circuit Module	integrated
Housing flammability	Metal/UL94V1 or above
Plug	Molex 51021.400 pin 1: positive pole, pin 2: unused, pin 3: NTC, pin 4: negative pole

Manufacturer declarations

Warranty

Sonova Consumer Hearing GmbH gives a warranty of 12 months on this product. For the current warranty conditions, please visit our website at www.sennheiser-hearing.com/warranty or contact your Sonova Consumer Hearing partner.

LIMITED AVAILABILITY OF REPLACEMENT PARTS AND REPAIR SERVICES

Most Products are covered by a 2-year Limited Warranty. Please see our full warranty terms and conditions here, which also include a list of the Products the warranty applies to: www.sennheiser-hearing.com/warranty-conditions.

Beyond the terms of the Limited Warranty, Sonova Consumer Hearing GmbH does not warrant or guarantee the availability of, and hereby disclaims any implied, statutory or other warranty or guarantee of availability of, any spare or replacement parts, repair services or information necessary for the maintenance or repair of the Products offered for sale at www.sennheiser-hearing.com by Sonova Consumer Hearing GmbH.

We recommend to use original Sennheiser batteries. The compatible Sennheiser battery is BA 500. It will be available in the EU and further selected countries. Check global.sennheiser-hearing.com/products/ba-500 for online availability or contact the Customer Service for further information. If you consider to use batteries from third-party providers, you need to ensure that the batteries comply with all technical specifications as shown in the chapter “Specifications” and are approved to local regulation(s).

Important note: Sonova does not assume any warranty for malfunctions or damages to the product caused by non-compatible or defective batteries from third-party providers. Replacing with a non-compatible battery can defeat safeguard.

In compliance with the following requirements

- General Product Safety Regulation (EU) 2023/988
- Compliant to **Sound Pressure Limits** according to country specific requirements

EU declaration of conformity

- Battery Regulation (EU) 2023/1542
- RoHS Directive (2011/65/EU)

Hereby, Sonova Consumer Hearing GmbH declares that the radio equipment type M5AEBT is in compliance with the Radio Equipment Directive (2014/53/EU).

The full text of the EU declaration of conformity is available at the following Internet address: www.sennheiser-hearing.com/download.

UK declaration of conformity

- RoHS Regulation (2012)
- Radio Equipment Regulations (2017)

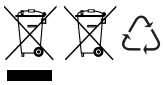

Notes on disposal

- EU: Battery Regulation (EU) 2023/1542
- EU: WEEE Directive (2012/19/EU)
- UK: Battery Regulations (2015)
- UK: WEEE Regulations (2013)

The symbol of the crossed-out wheeled bin on the product, the battery/rechargeable battery (if applicable) and/or the packaging indicates that these products must not be disposed of with normal household waste, but must be disposed of separately at the end of their operational lifetime. For packaging disposal, observe the legal regulations on waste segregation applicable in your country. Improper disposal of packaging materials can harm your health and the environment.

The separate collection of waste electrical and electronic equipment, batteries/rechargeable batteries (if applicable) and packagings is used to promote the reuse and recycling and to prevent negative effects on your health and the environment, e.g. caused by potentially hazardous substances contained in these products. Recycle electrical and electronic equipment and batteries/rechargeable batteries at the end of their operational lifetime in order to make contained recyclable materials usable and to avoid littering the environment.

If batteries/rechargeable batteries can be removed without damaging them, you are obliged to dispose of them separately (for the safe removal of batteries/rechargeable batteries, see the instruction manual of the product). Handle lithium-containing batteries/rechargeable batteries with special care, as they pose particular risks, such as the risk of fire and/or the risk of ingestion in the case of coin batteries. Reduce the generation of battery waste as much as possible by using longer-life batteries or rechargeable batteries.

Further information on the recycling of these products can be obtained from your municipal administration, from the municipal collection points, or from your Sonova Consumer Hearing partner. You can also return electrical or electronic equipment to distributors who have a take-back obligation. Herewith you make an important contribution to the protection of the environment and public health.

Trademarks

Apple®, iPad, iPhone, the Apple logo and Siri are trademarks of Apple Inc., registered in the U.S. and other countries. App Store® is a service mark of Apple Inc., registered in the U.S. and other countries and regions. The trademark “iPhone” is used in Japan with a license from Aiphone K.K. Android, Google Play and Fast Pair are trademarks of Google LLC.

The Bluetooth® word mark and logos are registered trademarks owned by Bluetooth SIG, Inc. The Auracast™ word mark and logos are trademarks owned by the Bluetooth SIG, Inc. Any use of such marks by Sonova Consumer Hearing GmbH is under license.

Manufactured under license from Dolby laboratories. Dolby, Dolby Atmos, Dolby Vision and the Double-D symbol are trademarks of Dolby laboratories.

Qualcomm® aptX™ is a product of Qualcomm Technologies International, Ltd. Qualcomm is a trademark of Qualcomm Incorporated, registered in the United States and other countries, used with permission. aptX™ is a trademark of Qualcomm Technologies International, Ltd., registered in the United States and other countries, used with permission.

The Qi logo is a trademark of the Wireless Power Consortium.

Sennheiser is a brand licensed by Sonova.

Other product and company names mentioned in the user documentation may be the trademarks or registered trademarks of their respective holders.