No.	Part	Pcs
A		1
B		1
C		2
D		1
E		1
F		1
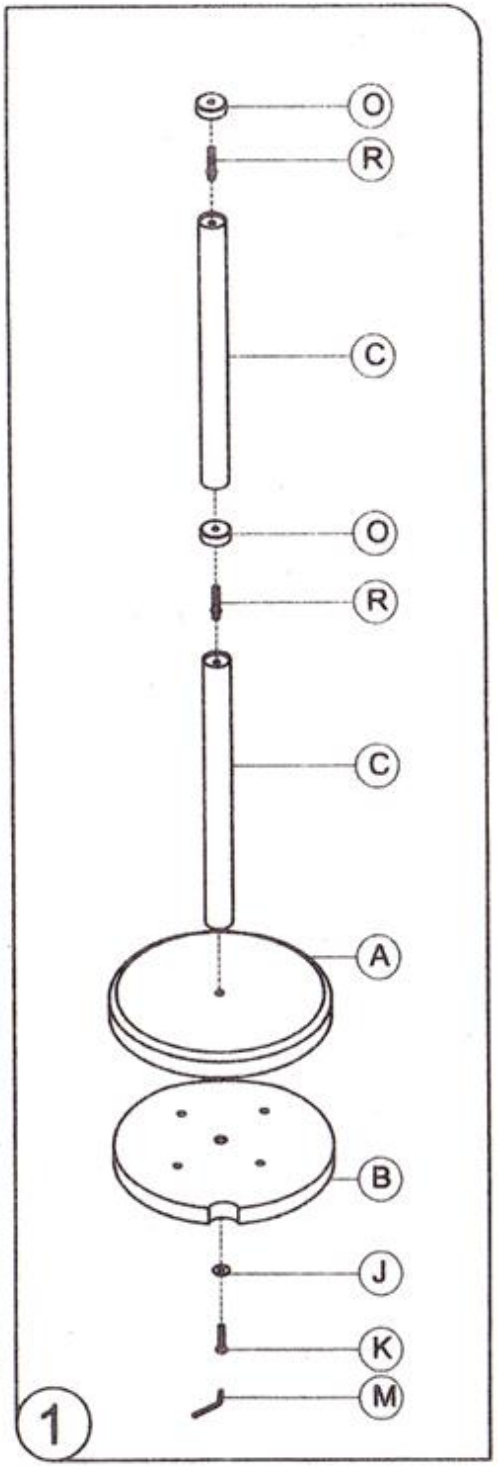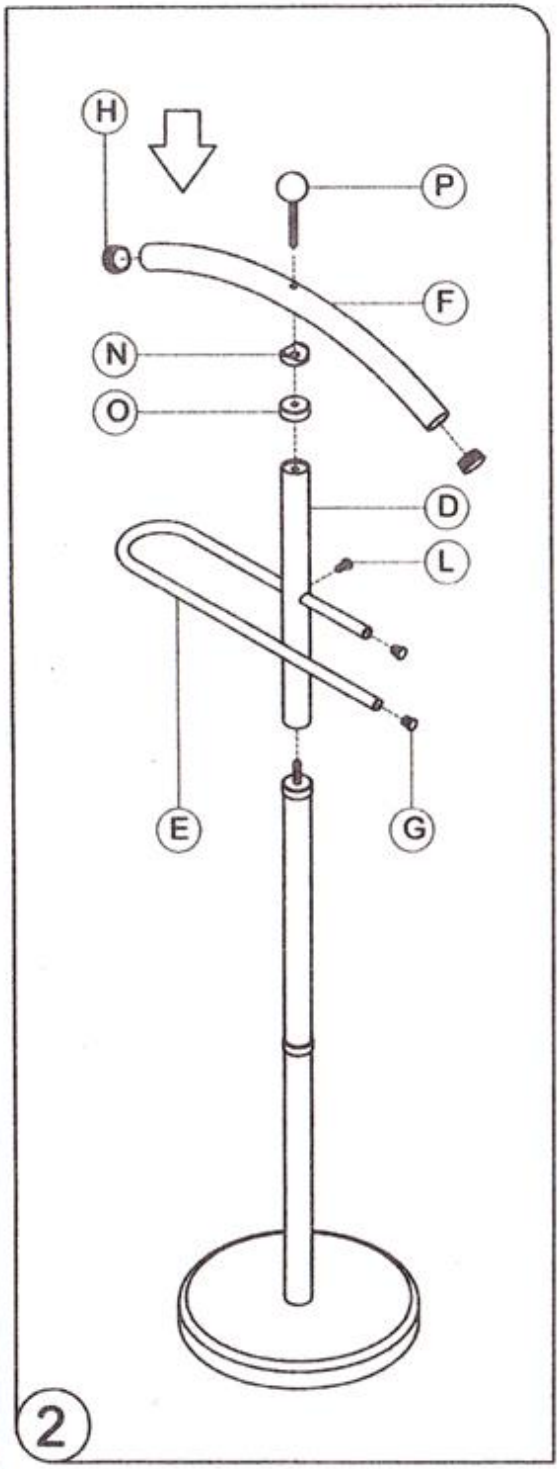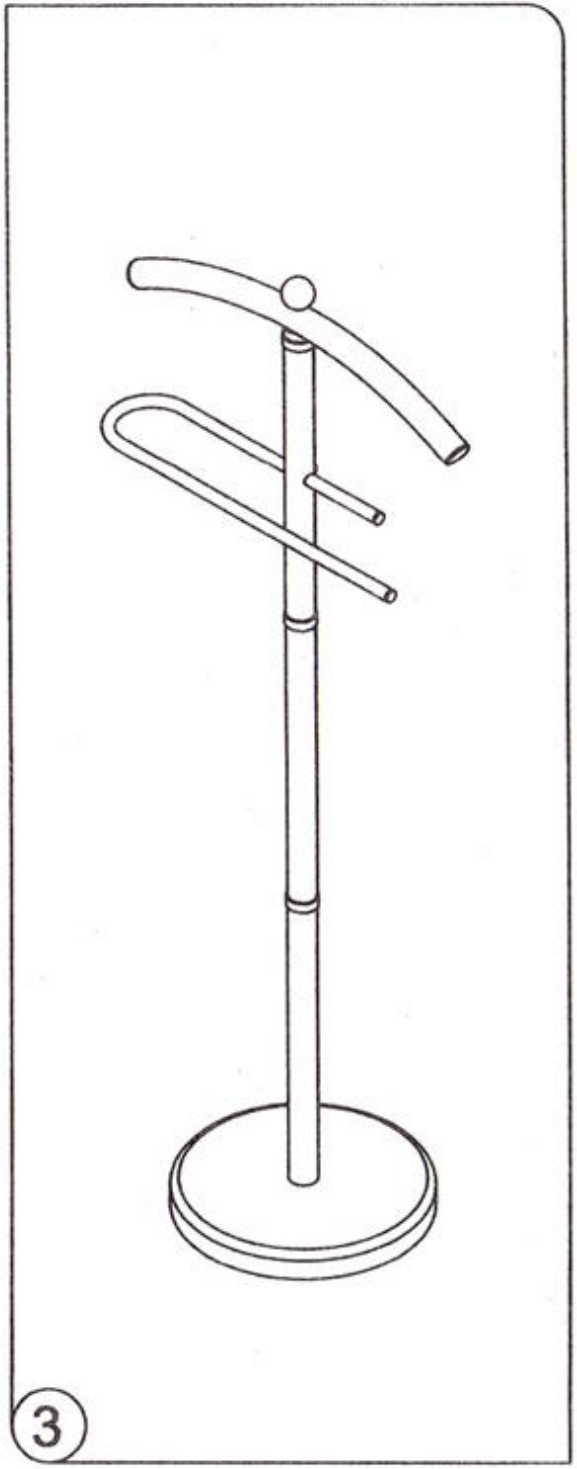
No.	Part	Pcs	No.	Part	Pcs
G		2	M		1
H		2	N		1
J		1	O		3
K		1	P		1
L		1	R		2