EMC Test Report

Application No.	:	LH-220303050912
Applicant	:	Shenzhen Xinjin cable Co., Ltd.
Equipment Under Test (EUT)		
EUT Name	:	Ethernet cable
Model No.	:	Five kinds of cable
Serial No.	:	See Page 3
Trademark	:	鑫晋讯惠
Receipt Date	:	2022-03-08
Test Date	:	2022-03-08 to 2022-03-11
Issue Date	:	2022-03-22
Standards	:	EN 55032: 2015/A1: 2020 EN 55035:2017/A11:2020
Conclusions	:	**PASS**

In the configuration tested, the EUT complied with the standards specified above. The EUT technically complies with the 2014/30/EU directive requirements

Test/Witness Engineer : York xin

Approved & Authorized : Jack su

This report details the results of the testing carried out on one sample. The results contained in this test report do not relate to other samples of the same product. The manufacturer should ensure that all products in series production are in conformity with the product sample detailed in the report.

TABLE OF CONTENTS

1. General Information **3**
1.1. Client Information 3
1.2. General Description of EUT (Equipment Under Test) 3
1.3. Block Diagram Showing The Configuration of System Tested 3
1.4. Description of Support Units 4
1.5. Performance Criterion 4
1.6. Test Facility 4
2. TEST Results Summary **5**
3. Test Equipment Used **6**
4. Radiated Emission Test **8**
4.1. Test Standard and Limit 8
4.2. Test Setup 8
4.3. Test Procedure 8
4.4. Test Condition 9
4.5. Test Data 9
5. Electrostatic Discharge Immunity Test **12**
5.1. Test Requirements 12
5.2. Test Setup 12
5.3. Test Procedure 13
5.4. Test Data 13
6. Radiated Electromagnetic Field Immunity Test **15**
6.1. Test Requirements 15
6.2. Test Setup 15
6.3. Test Procedure 15
6.4. Test Data 16
7. Photographs - Constructional Details **18**

1. General Information

1.1. Client Information

Applicant	:	Shenzhen Xinjin cable Co., Ltd.
Address	:	Room 603, Building 4, Yuebao Garden, No. 31, Baoli Road, Dexing Community, Buji Street, Longgang District, Shenzhen
Manufacturer	:	Shenzhen Xinjin cable Co., Ltd.
Address	:	Room 603, Building 4, Yuebao Garden, No. 31, Baoli Road, Dexing Community, Buji Street, Longgang District, Shenzhen

1.2. General Description of EUT (Equipment Under Test)

EUT Name	:	Ethernet cable
Model No.	:	Five kinds of cable
Serial No.	:	Six kind of cable
Trademark	:	鑫晋讯惠
Power Supply	:	DC 5V, 1A
Remark: All above models are identical in schematic, structure and critical components except for only different appearance; therefore, EMC testing was performed with Five kinds of cable only.		

1.3. Block Diagram Showing The Configuration of System Tested

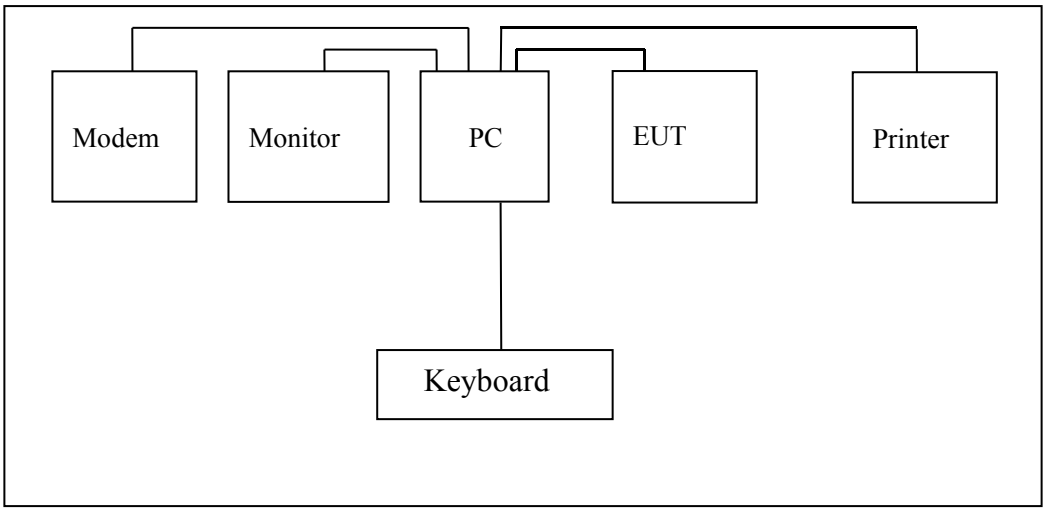

1.4. Description of Support Units

Name	Model	S/N	Manufacturer	Used " √ "
Printer	HP1505n	VNF3G06957	HP	√
Modem	RX304Xv2	----	ASUS	√
LCD Monitor	E170Sc	----	DELL	√
PC	OPTIPLEX380	----	DELL	√
Keyboard	L100	U01C	DELL	√

1.5. Performance Criterion

Criterion A: The equipment shall continue to operate as intended without operator intervention. No degradation of performance of loss of function is allowed below a performance level specified by the manufacturer when the equipment is used as intended.

Criterion B: After the test, the equipment shall continue to operate as intended without operator intervention. No degradation of performance or loss of function is allowed, after the application of the phenomena below a performance level specified by the manufacturer, when the equipment is used as intended.

Criterion C: Loss of function is allowed, provided the function is self-recoverable, or can be restored by the operation of the controls by the user in accordance with the manufacturer's instructions.

1.6. Test Facility

The testing report were performed by the Shenzhen LH Testing Technology Co., Ltd., in their facilities located at 201～203, building 22, Yongli Industrial Zone, Tangxi, guxing community, Xixiang street, .

2. TEST Results Summary

EMISSION		
Description of test items	**Standards**	**Results**
Conducted disturbance at mains terminals	EN 55032: 2015/A1: 2020	N/A
Radiated Disturbance	EN 55032: 2015/A1: 2020	Pass
Harmonic current emissions	EN IEC 61000-3-2: 2019/A1: 2021	N/A
Voltage fluctuation and flicker	EN 61000-3-3:2013/A1:2019	N/A
IMMUNITY		
Description of test items	**Standards**	**Results**
Electrostatic Discharge (ESD)	EN 61000-4-2: 2009	Pass
Radio-frequency, Continuous radiated disturbance	EN IEC 61000-4-3:2020	Pass
EFT/B Immunity	EN 61000-4-4: 2012	N/A
Surge Immunity	EN 61000-4-5: 2014/A1:2017	N/A
Conducted RF Immunity	EN 61000-4-6: 2014	N/A
Power frequency magnetic field	EN 61000-4-8: 2010	N/A
Voltage dips, >95% reduction	EN IEC 61000-4-11:2020	N/A
Voltage dips, 30% reduction		
Voltage interruptions		
Note: N/A is an abbreviation for Not Applicable.		

3. Test Equipment Used

3.1. Test Equipment Used to Measure Conducted Emission					
No.	**Equipment**	**Manufacturer**	**Model No.**	**Last Cal.**	**Cal. Interval**
LH-EMC001	EMI Test Receiver	Rohde & Schwarz	ESCS30	Dec. 30, 2021	1 Year
LH-EMC002	AMN	Rohde & Schwarz	ENV216	Dec. 30, 2021	1 Year
LH-EMC003	AMN	SCHWARZBECK	NNBL 8226	Dec. 30, 2021	1 Year
3.2. Test Equipment Used to Measure Radiated Emission					
No.	**Equipment**	**Manufacturer**	**Model No.**	**Last Cal.**	**Cal. Interval**
LH-EMC004	EMI Test Receiver	Rohde & Schwarz	ESI26	Dec. 30, 2021	1 Year
LH-EMC005	Bilog Antenna	SCHWARZBECK	VULB9163	Dec. 30, 2021	1 Year
LH-EMC006	Positioning Controller	C&C	CC-C-1F	N/A	N/A
3.3. Test Equipment Used to Measure Harmonic Current/ Voltage Fluctuation and Flicker					
No.	**Equipment**	**Manufacturer**	**Model No.**	**Last Cal.**	**Cal. Interval**
LH-EMC007	Harmonic Flicker Test System	CI	5001ix-CTS-400	Dec. 30, 2021	1 Year
3.4. Test Equipment Used to Measure Electrostatic Discharge Immunity					
No.	**Equipment**	**Manufacturer**	**Model No.**	**Last Cal.**	**Cal. Interval**
LH-EMC008	ESD Tester	TESEQ	NSG437	Dec. 30, 2021	1 Year
3.5. Test Equipment Used to Measure Conducted Immunity					
No.	**Equipment**	**Manufacturer**	**Model No.**	**Last Cal.**	**Cal. Interval**
LH-EMC009	RF Generator	FRANKONIA	CIT-10/75	Dec. 30, 2021	1 Year
LH-EMC010	Attenuator	FRANKONIA	59-6-33	Dec. 30, 2021	1 Year
LH-EMC011	M-CDN	LUTHI	M2/M3	Dec. 30, 2021	1 Year
LH-EMC012	CDN	LUTHI	AF2	Dec. 30, 2021	1 Year
LH-EMC013	EM Injection Clamp	LUTHI	EM101	Dec. 30, 2021	1 Year
3.6. Test Equipment Used to Measure Radio Frequency Electromagnetic Fields Immunity					
No.	**Equipment**	**Manufacturer**	**Model No.**	**Last Cal.**	**Cal. Interval**
LH-EMC014	Signal Generator	Rohde & Schwarz	SMT03	Dec. 30, 2021	1 Year

LH-EMC015	Power Meter	Rohde & Schwarz	NRVD	Dec. 30, 2021	1 Year
LH-EMC016	Voltage Probe	Rohde & Schwarz	URV5-Z2	Dec. 30, 2021	1 Year
LH-EMC017	Voltage Probe	Rohde & Schwarz	URV5-Z2	Dec. 30, 2021	1 Year
LH-EMC018	Power Amplifier	AR	150W1000	Dec. 30, 2021	1 Year
LH-EMC019	Bilog Antenna	Chase	CBL6111C	Dec. 30, 2021	1 Year
3.7. Test Equipment Used to Measure Electrical Fast Transient/Burst Immunity					
No.	**Equipment**	**Manufacturer**	**Model No.**	**Last Cal.**	**Cal. Interval**
LH-EMC020	Simulator	EMTEST	UCS500N5	Dec. 30, 2021	1 Year
LH-EMC021	Auto-transformer	EMTEST	V4780S2	Dec. 30, 2021	1 Year
3.8. Test Equipment Used to Measure Surge Immunity					
No.	**Equipment**	**Manufacturer**	**Model No.**	**Last Cal.**	**Cal. Interval**
LH-EMC022	Simulator	EMTEST	UCS500N5	Dec. 30, 2021	1 Year
LH-EMC023	Coupling Clamp	EMTEST	HFK	Dec. 30, 2021	1 Year
3.9. Test Equipment Used to Measure Voltage Dips and Interruptions Immunity					
No.	**Equipment**	**Manufacturer**	**Model No.**	**Last Cal.**	**Cal. Interval**
LH-EMC022	Simulator	EMTEST	UCS500N5	Dec. 30, 2021	1 Year
LH-EMC023	Coupling Clamp	EMTEST	HFK	Dec. 30, 2021	1 Year
3.10. Test Equipment Used to Measure Power frequency Magnetic Field					
No.	**Equipment**	**Manufacturer**	**Model No.**	**Last Cal.**	**Cal. Interval**
LH-EMC026	Power Frequency Magnetic Field Generator	EVERFINE	EMS61000-8	Dec. 30, 2021	1 Year

4. Radiated Emission Test

4.1. Test Standard and Limit

4.1.1. Test Standard

EN 55032: 2015/A1: 2020

4.1.2. Test Limit

Radiated Disturbance Test Limit (Class B)

Frequency	Limit (dBμV/m)
	Quasi-peak Level
30MHz~230MHz	40
230MHz~1000MHz	47
Remark: 1. The lower limit shall apply at the transition frequency. 2. The test distance is 3m.	

4.2. Test Setup

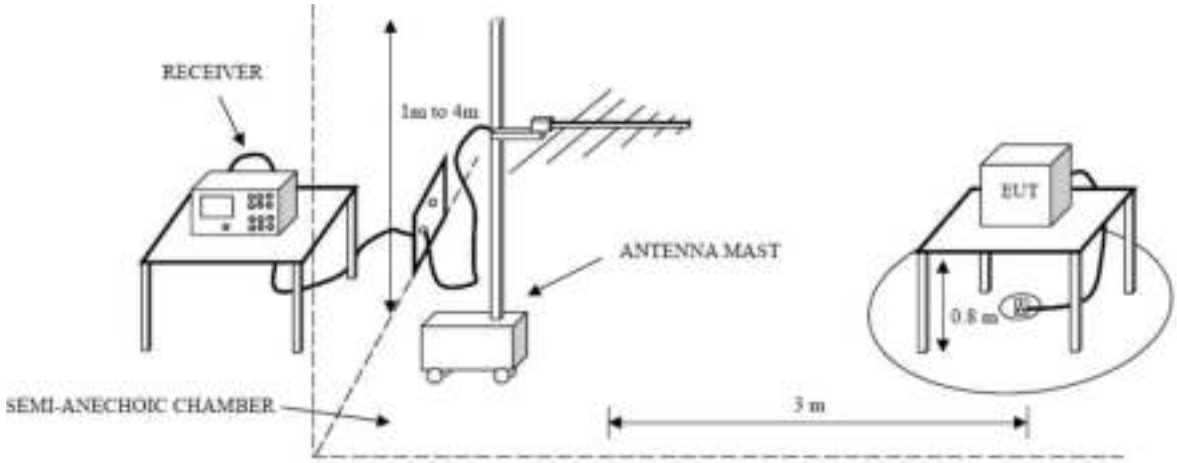

4.3. Test Procedure

The EUT was placed on the top of a rotating table 0.8 meters above the ground at a 3m. The table was rotated 360 degrees to determine the position of the highest radiation.

The height of the equipment or of the substitution antenna shall be 0.8 m; the height of the test antenna shall vary between 1 m to 4 m. Both horizontal and vertical polarizations of the antenna are set to make the measurement.

The initial step in collecting radiated emission data is a spectrum analyzer peak detector mode pre-scanning the measurement frequency range.

If the Peak Mode measured value compliance with and lower than Quasi Peak Mode Limit, the EUT shall be deemed to meet QP Limits and then no additional QP Mode measurement performed.

4.4. Test Condition

Temperature	:	25 ℃
Relative Humidity	:	48 %
Pressure	:	1010 hPa
Test Power	:	DC 5V

4.5. Test Data

Please refer to the following pages.

Operating Condition: Normal
Test Specification: Horizontal

No.	Mk.	Freq.	Reading Level	Correct Factor	Measure-ment	Limit	Over	
		MHz	dBuV	dBuV/m	dBuV/m	dBuV/m	dB	Detector
1		35.7490	46.18	-15.04	31.14	40.00	-8.86	QP
2	*	46.8303	46.21	-12.69	33.52	40.00	-6.48	QP
3		59.8588	38.80	-14.15	24.65	40.00	-15.35	QP
4		118.1860	45.90	-15.78	30.12	40.00	-9.88	QP
5		173.8135	45.61	-16.17	29.44	40.00	-10.56	QP
6		432.5457	30.81	-8.07	22.74	47.00	-24.26	QP

Operating Condition: Normal
Test Specification: Vertical

No.	Mk.	Freq.	Reading Level	Correct Factor	Measure-ment	Limit	Over	
		MHz	dBuV	dBuV/m	dBuV/m	dBuV/m	dB	Detector
1		97.1148	38.73	-14.92	23.81	40.00	-16.19	QP
2	*	117.3602	47.61	-15.64	31.97	40.00	-8.03	QP
3		175.6516	44.04	-16.06	27.98	40.00	-12.02	QP
4		262.8955	33.97	-11.66	22.31	47.00	-24.69	QP
5		407.5144	28.85	-8.43	20.42	47.00	-26.58	QP
6		842.1295	27.43	-2.16	25.27	47.00	-21.73	QP

5. Electrostatic Discharge Immunity Test

5.1. Test Requirements

5.1.1. Test Standard

EN 55035:2017/A11:2020 (EN 61000-4-2: 2009)

5.1.2. Test Level

Level	Test Voltage Contact Discharge (kV)	Test Voltage Air Discharge (kV)
1	±2	±2
2	±4	±4
3	±6	±8
4	±8	±15
X	Special	Special

5.1.3. Performance criterion: **B**

5.2. Test Setup

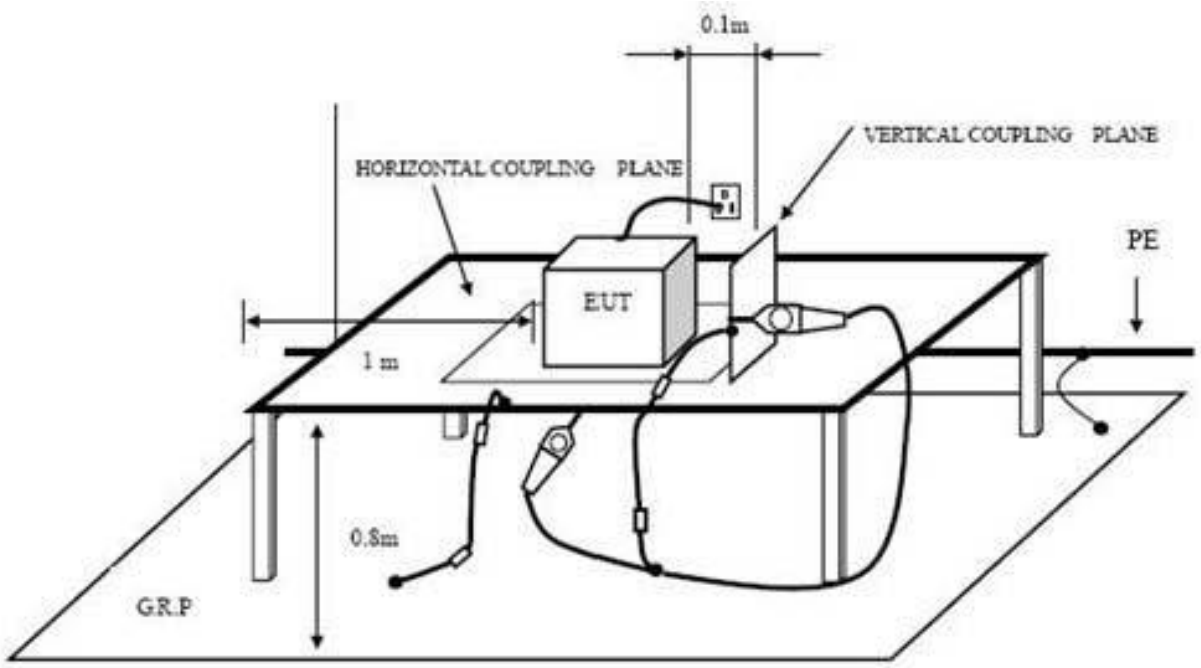

INDIRECT DISCHARGE SETUP

5.3. Test Procedure

5.3.1. Air Discharge:

This test is done on a non-conductive surface. The round discharge tip of the discharge electrode shall be approached as fast as possible to touch the EUT. After each discharge, the discharge electrode shall be removed from the EUT. The generator is then re-triggered for a new single discharge and repeated 10 times for each pre-selected test point. This procedure shall be repeated until all the air discharge completed.

5.3.2. Contact Discharge:

All the procedure shall be same as air discharge. Except that the tip of the discharge electrode shall touch the EUT before the discharge switch is operated.

5.3.3. Indirect discharge for horizontal coupling plane

At least 10 single discharges (in the most sensitive polarity) shall be applied at the front edge of each HCP opposite the center point of each unit (if applicable) of the EUT and 0.1m from the front of the EUT. The long axis of the discharge electrode shall be in the plane of the HCP and perpendicular to its front edge during the discharge.

5.3.4. Indirect discharge for vertical coupling plane

At least 10 single discharges (in the most sensitive polarity) shall be applied to the center of one vertical edge of the coupling plane. The coupling plane, of dimensions 0.5m X 0.5m, is placed parallel to, and positioned at a distance of 0.1m from the EUT. Discharges shall be applied to the coupling plane, with this plane in sufficient different positions that the four faces of the EUT are completely illuminated.

5.4. Test Data

Please refer to the following pages.

Electrostatic Discharge Test Result

EUT	: Ethernet cable	M/N	: Five kinds of cable
Temperature	: 22℃	Humidity	: 50%
Power supply	: DC 5V	Test Mode	: Normal

Criterion: B

Air Discharge: ±8kV Contact Discharge: ±4kV

For each point positive 10 times and negative 10 times discharge.

Location	**Kind** A-Air Discharge C-Contact Discharge	**Result**
Nonconductive Enclosure	A	PASS
Slot of the EUT	A	PASS
USB Port	A	PASS
LED Light	A	PASS
HCP	C	PASS
VCP of front	C	PASS
VCP of rear	C	PASS
VCP of left	C	PASS
VCP of right	C	PASS

6. Radiated Electromagnetic Field Immunity Test

6.1. Test Requirements

6.1.1. Test Standard

EN 55035:2017/A11:2020 (EN IEC 61000-4-3:2020)

6.1.2. Test Level

Level	Field Strength V/m
1	1
2	3
3	10
X	Special

6.1.3. Performance criterion: **A**

6.2. Test Setup

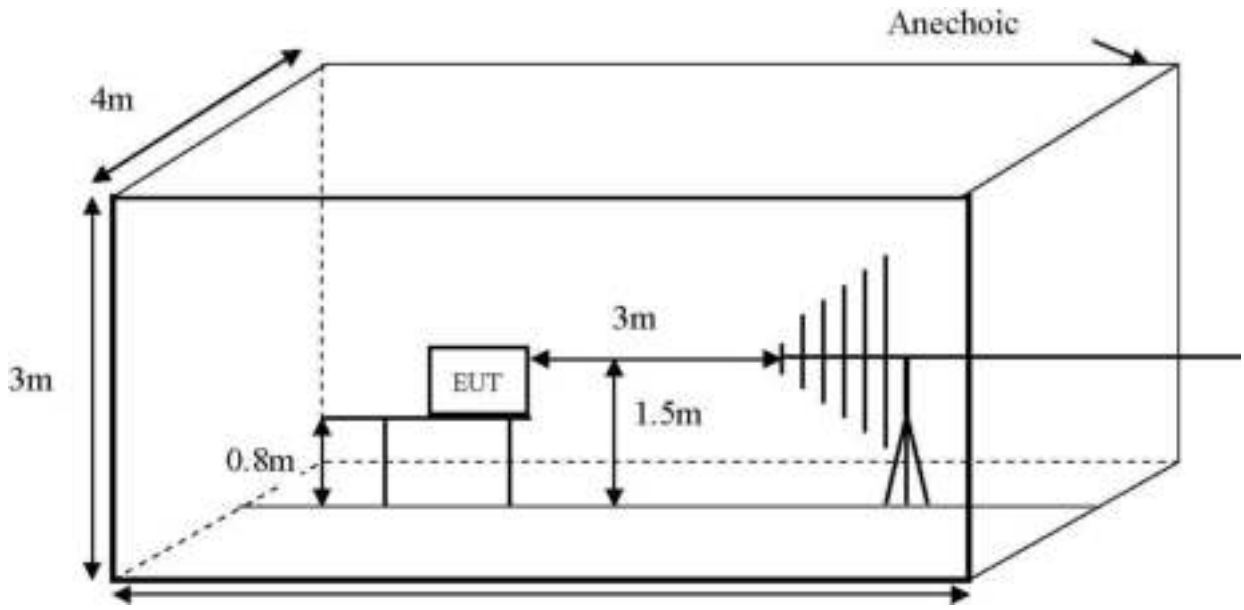

6.3. Test Procedure

The EUT are placed on a table, which is 0.8 meter high above the ground. The EUT is set 3 meters away from the transmitting antenna, which is mounted on an antenna tower. Both horizontal and vertical polarization of the antenna is set on test. Each of the four sides of the EUT must be faced this transmitting antenna and measured individually.

In order to judge the EUT performance, a camera is used to monitor its screen.

All the scanning conditions are as following:

Condition of Test	Remark
Fielded strength	3V/m (Severity Level 2)
Radiated signal	Modulated
Scanning frequency	80-1000MHz
Sweep time of radiated	0.0015 Decade/s
Dwell time	1 Sec.

6.4. Test Data

Please refer to the following pages.

RF Field Strength Susceptibility Test Results

EUT	: Ethernet cable	M/N	: Five kinds of cable
Temperature	: 22℃	Humidity	: 50%
Power supply	: DC 5V	Test Mode	: Normal

Criterion: A

Modulation: Unmodulated

Pulse: AM 1KHz 80%

	Frequency Range 1		Frequency Range 2	
	80~1000MHz			
	Horizontal	Vertical	Horizontal	Vertical
Front	PASS	PASS	/	/
Right	PASS	PASS	/	/
Rear	PASS	PASS	/	/
Left	PASS	PASS	/	/

Remark:

7. Photographs - Constructional Details

Photo 1 Appearance of EUT

Photo 2 Appearance of EUT

END OF REPORT