Insta360 X5

User Manual

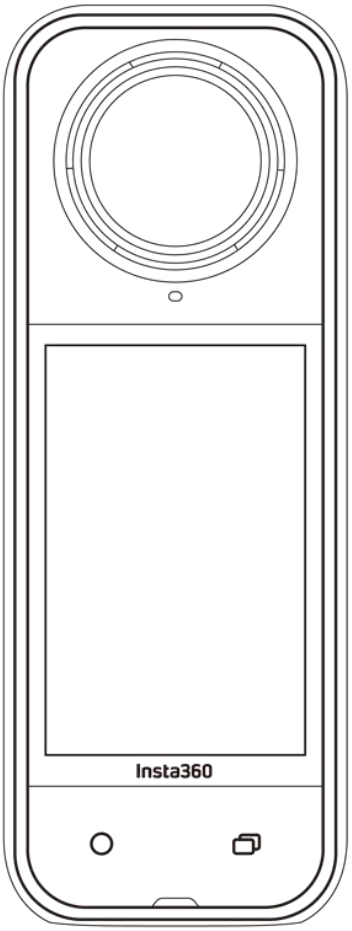

Content

Product Introduction 4

X5 Introduction 4

First Use 5

Insert the MicroSD Card 5

Charging 6

Activation 7

Basic Use 8

Button Instructions 8

Using the Touchscreen 10

Shooting Interface 12

Shooting Mode 13

Shortcut Menu 15

Shooting Specification Settings 17

Shooting Parameter Settings 19

Album Page 22

Indicator Lights 23

File Storage 24

Format MicroSD Card 25

Attach External Devices 26

Transfer and Edit with the Insta360 App 27

Connect to the Insta360 App 27

File Transfer 28

Editing 31

Maintenance 32

Find Your Serial Number 32

Firmware Update 35

Lens Guards 36

Waterproofing 37

Cleaning 38

Battery Precautions 38

Product Introduction

X5 Introduction

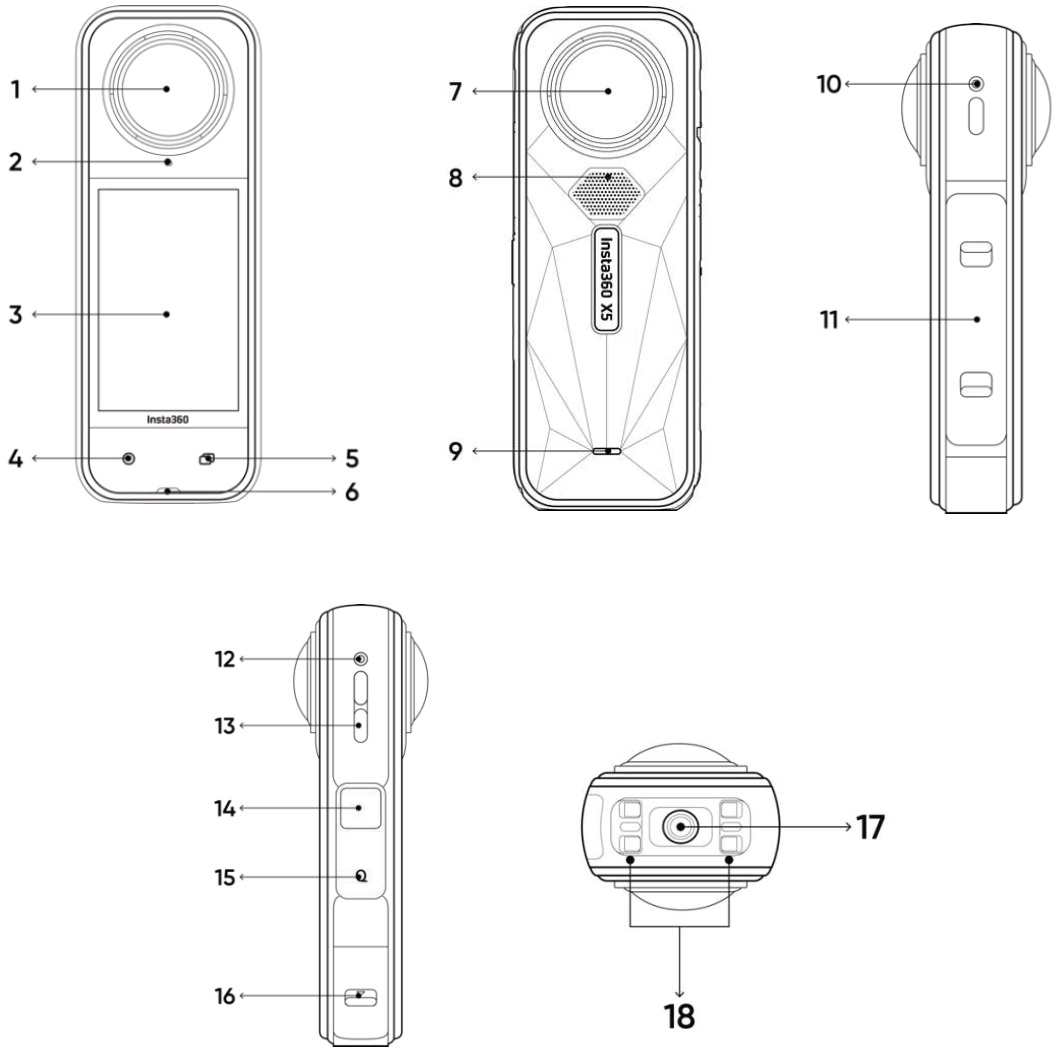

1. Front Lens
2. Microphone
3. Touchscreen
4. Shutter Button
5. Menu Button
6. Indicator Light
7. Rear Lens
8. Microphone
9. Indicator Light
10. Microphone
11. Battery
12. Microphone
13. Speaker
14. Power Button
15. Quick Button
16. USB Type-C Port
17. 1/4" Mounting Point
18. Quick Release Mounting Point

First Use

Insert the MicroSD Card

1. First, remove the battery by pinching the latches on the cover towards each other.
2. Insert the memory card into the slot in the direction indicated.
3. Reinsert the battery and make sure the battery cover is locked. The orange indication marks should be covered by the latch to ensure waterproofing is not affected.

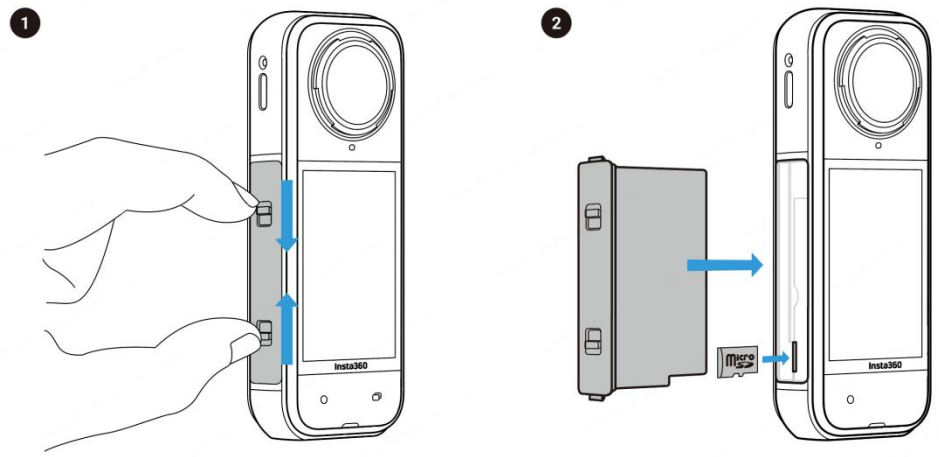

Charging

1. Open the USB Port Cover.
2. Use the included USB-C Cable to charge X5.

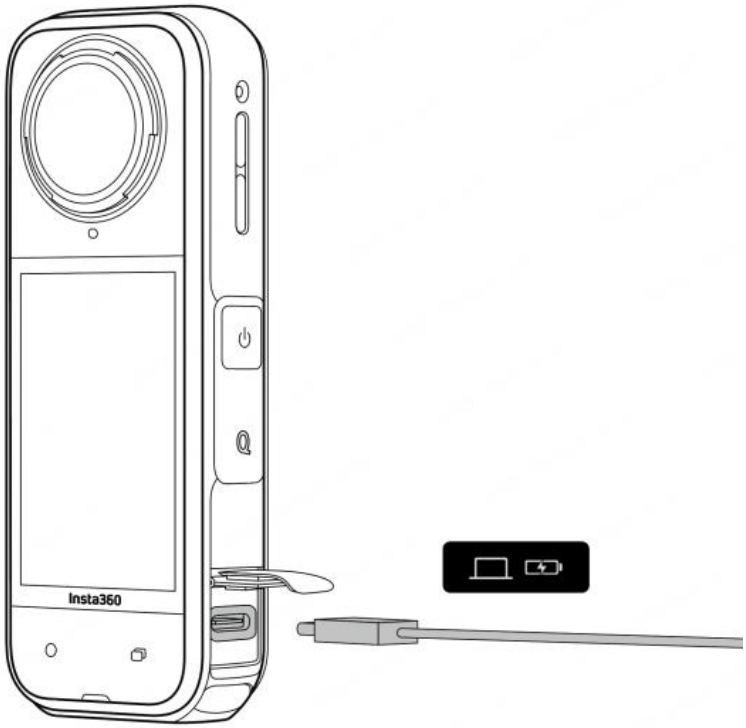

X5 supports PD fast charging with the X5 Utility Fast Charge Hub and with 9V/3A adapters.

X5 Charging Time: (9V/3A Adapter)

- 0–80%: 20 mins
- 0–100%: 35 mins

Activation

You need to activate X5 in the Insta360 app before using it for the first time.

Steps:

1. Download the Insta360 app. Just search "Insta360" in any major app store or scan the QR code on the box.
2. Press the Power Button to turn on X5.
3. Enable Wi-Fi and Bluetooth on your smartphone.
4. Open the Insta360 app and tap the camera icon at the bottom of the page. Select the device you want to connect to in the pop-up window, then follow the on-screen instructions to complete the connection. The name of your camera is "X5**" by default, where ** is the last six digits of the serial number on the box your X5 came in. The first time you connect to X5, you will need to confirm the connection on the touchscreen.
5. After successfully connecting the camera, follow the on-screen instructions to activate your camera. The app will prompt you to update the firmware if a new version is available. Please follow the on-screen prompts to update X5's firmware.

Basic Use

Button Instructions

Power Button

Camera Status	Operation	Descriptions
Powered off	Press once	• Power on camera.
Powered on	Press once	• Turn touchscreen on/off.
	Long press	• 2 seconds: Power off. • 8 seconds: Force shutdown.

Quick Button

Camera Status	Operation	Descriptions
Powered on	Press once	• Quickly access preset shooting modes and parameters. Press again to switch between different presets. • Cycle through to the last icon to add or customize presets.
Charging (power off)	Press once	Check charging status

Shutter Button

Camera Status	Operation	Descriptions
Powered off	Press once	• Start shooting with QuickCapture. *Must be enabled on the camera first.
Powered on	Press once	• During Preview: - Take a photo or start recording a video. - Stop recording. • In other pages: • - Return to the preview page.
	Long press	• While recording, long press to quickly cancel and delete the recording. *Enable "Long press Shutter Button to cancel recording" in Settings first.

Menu Button

Camera Status	Operation	Descriptions
Powered on	Press once	• Quickly switch between Video and Photo modes.
Charging (power off)	Press once	Check charging status

You can also customize the Menu Button and Quick Button to start recording, switch shooting modes and more. Go to: Settings > Customize Button.

Using the Touchscreen

When the camera is powered on, the touchscreen displays the camera's home page and information about the shooting mode, battery level, and storage capacity. By swiping or tapping the screen, you can achieve the following:

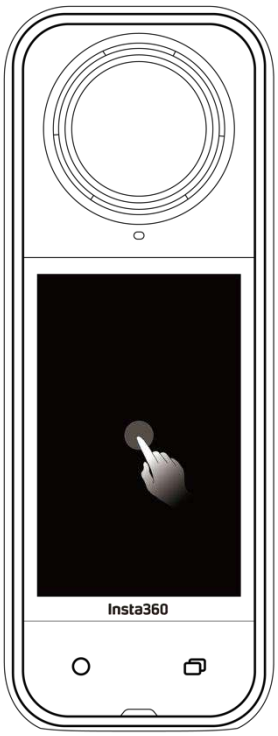	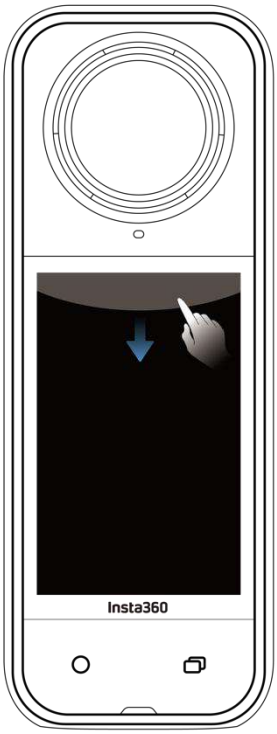	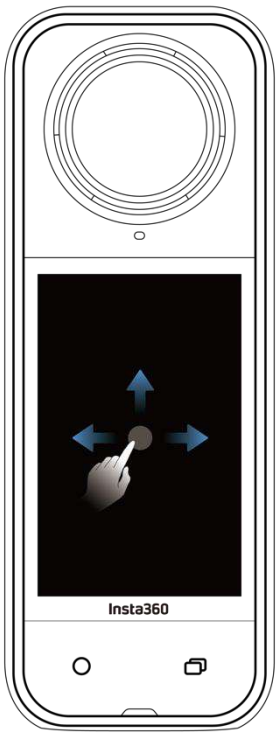
Tap the screen Hide/show information on the touchscreen.	**Swipe down from the top** View Shortcut Menu.	**Swipe left to right or up and down from the center** Adjust the shooting angle in 360° Mode.

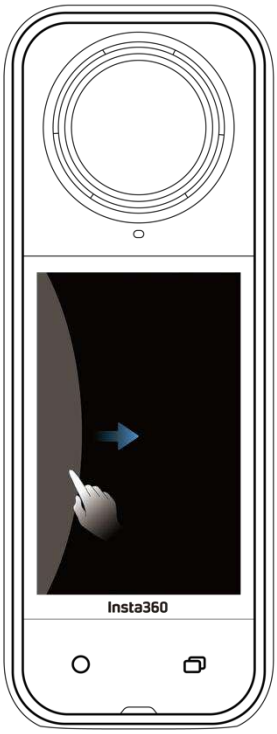	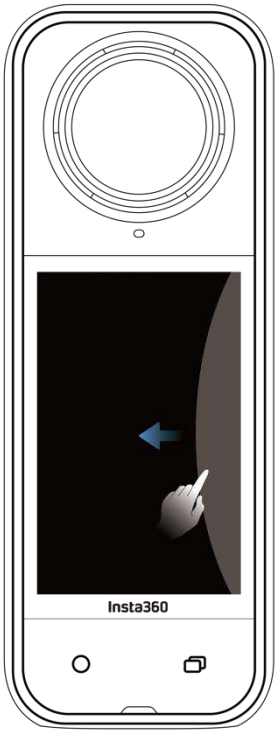	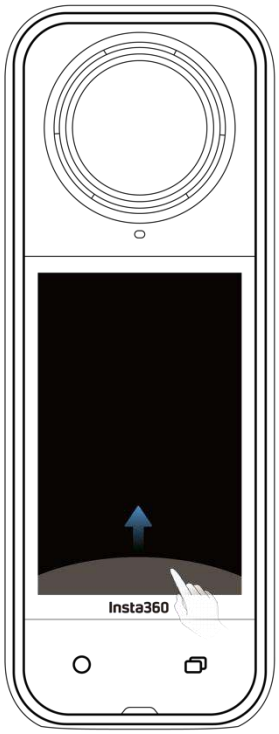
Swipe from the left Enter the album page.	**Swipe from the right** Enter shooting parameter settings.	**Swipe up from the bottom** More shooting parameter settings.

Shooting Interface

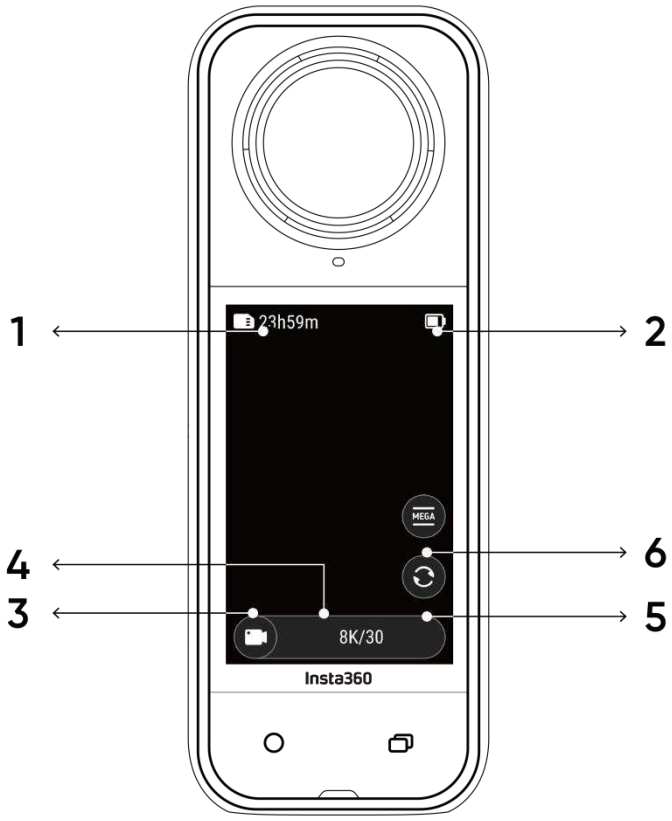

1. Storage: Shows the remaining number of photos or the length of video footage that can be stored on the microSD card.
2. Battery Status: Current battery level.
3. Shooting Mode: Click the icon and swipe to select a different shooting mode.
4. Shooting Specifications: See the current shooting mode settings.
5. Switch Lens: Tap to switch between forward and selfie view. In 360° Mode, you can also use it to return to the original recording position.
6. Field of View: Change the field of view (Single-Lens Mode only).

Shooting Mode

Tap the shooting mode icon and swipe left or right from the center of the screen to cycle through the shooting modes.

- In 360° Mode:

360° Shooting Tips

X5 captures 360° video by stitching together footage from its two fisheye lenses. For best results, make sure one of the lenses is facing you when shooting, and avoid standing too close to the side of the camera.

Shooting Mode	Description
Video	Record 360° videos in up to 8K30fps.
PureVideo	PureVideo improves image quality in low light environments.
InstaFrame	Simultaneously capture an auto-framed flat video and a 360° video. Note, Gesture Control is not supported in this mode.
Timelapse	Suitable for shooting static timelapse videos.
TimeShift	Take a hyperlapse (sped-up) video while moving.
Bullet Time	Slow-motion video with 360º overhead rotation.
Loop Recording	Record continuously and save only the last fixed-length segment.
Road Mode	Loop recording within a certain storage space, overwriting the earliest recording when the space is full.
Starlapse	Shoot and store multiple photos and automatically combine Starlapse effects.
Burst Photos	Take multiple photos in a short space of time.

Interval	The camera automatically takes continuous photos at a specific time interval.
Photo	Take a single photo.

- In Single-Lens Mode:

Shooting Mode	Description
Video	Record wide-angle videos from one lens up to 4K60fps.
FreeFrame Video	Apply FlowState Stabilization and Horizon Lock with adjustable aspect ratio in post via the app or Studio.
Me Mode	Record wide-angle videos with the Invisible Selfie Stick effect, keeping you in the center without any reframing.
Loop Recording	Record continuously and save only the last fixed-length segment.
Photo	Take a single photo.

Is it normal for the camera to get warm while shooting?

When shooting in 8K resolution, the camera uses a lot processing power, so it's normal for the body to warm up. You can try the following to reduce power consumption, extend battery life, and improve your shooting experience:

- Enable or disable high-performance features as needed, such as turning off the AI Highlights Assistant.
- Adjust the screen timeout. In the Shortcut Menu, go to: Settings > Screen Auto Sleep, and set a shorter timeout duration.

Shortcut Menu

Swipe down on the touchscreen to view the Shortcut Menu.

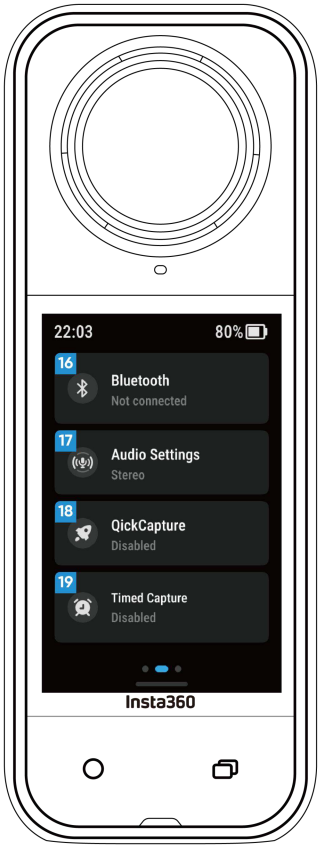

1. Rotation Lock: Turn on/off.
2. Lock Screen: Tap to lock screen. Swipe up on the touchscreen to unlock.
3. Settings: See camera settings.
4. Adjust Brightness: Slide the bar to adjust the screen brightness.
5. Prompt Sound: Set the camera speaker volume. There are five options: Adaptive, High, Medium, Low, and Mute.
6. Indicator Light: Turn on/off.
7. Sync files to the cloud: Subscribe to Insta360+ for automatic file backup, online playback, easy sharing, on-the-go editing and convenient cloud export.
8. AI Highlights Assistant: Turn on/off. The camera finds the best moments from a single video and shows you the highlights to review. Merge them into one video or save each of them as new files. View them on the Album page.

9. Pre-Recording: Turn on/off. The footage from a certain duration before pressing the shutter button can be saved. (duration varies in different shooting modes).
10. Gesture Control: Turn on/off.
11. Voice Control: Turn on/off.
12. Twist to Shoot: When the camera is powered on, twist the selfie stick back and forth twice to shoot or take a photo.
13. Accessories: You need to adjust the settings for certain accessories before using them with X5, including the Invisible Dive Case, POV Chest Mount, and Thermo Grip Cover.
14. Preset: Switch between, add and modify preset shooting modes and parameters.
15. Endurance Mode: Enabling will limit some features to extend run time.
16. Bluetooth: Search for and connect a Bluetooth remote or Bluetooth headset/microphone.
17. Audio Settings: Switch audio mode.
18. Quick Capture: Turn on/off. Once enabled, press the Shutter Button when the camera is powered off to turn it on and start recording.
19. Timed Capture: When turned on, the camera will shoot according to the time specified.

Shooting Specification Settings

Swipe up from the bottom of the touchscreen to view shooting specification settings.

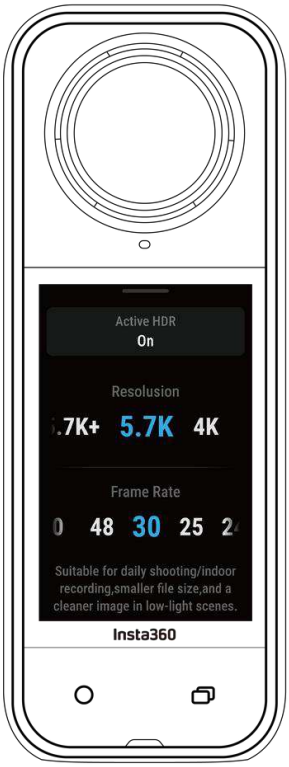

- In 360°Mode:

Shooting Mode	Parameters
Video	Active HDR, Resolution, Frame Rate
PureVideo	Resolution, Frame Rate
InstaFrame	Flat Video Resolution, Ratio, 360° Resolution, Frame Rate
Timelapse	Resolution, Frame Rate, Interval
TimeShift	Resolution, Frame Rate, Speed
Bullet Time	Resolution, Frame Rate
Loop Recording	Resolution, Frame Rate, Loop Duration

Road Mode	Loop Space, Power-off Charging, Resolution, Frame Rate
Starlapse	Type, Resolution, Duration, Timer
Burst	Timer, Format, Resolution, Burst number/duration
Interval	Resolution, Duration, Interval, Format
Photo	HDR Photo, Format, Resolution, Timer

- In Single-Lens Mode:

Shooting Mode	Parameters
Video	Ratio, Resolution, Frame Rate
FreeFrame Video	Ratio, Resolution, Frame Rate, Horizon Lock
Me Mode	Ratio, Resolution, Frame Rate
Loop Recording	Ratio, Resolution, Frame Rate, Loop Duration
Photo	Ratio, Resolution, Timer, Format

Shooting Parameter Settings

Swipe left from the right edge of the touchscreen to see the shooting parameter settings.

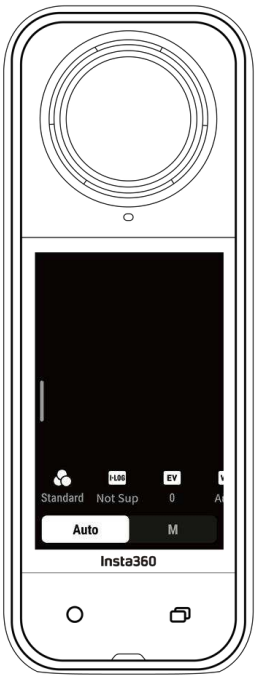

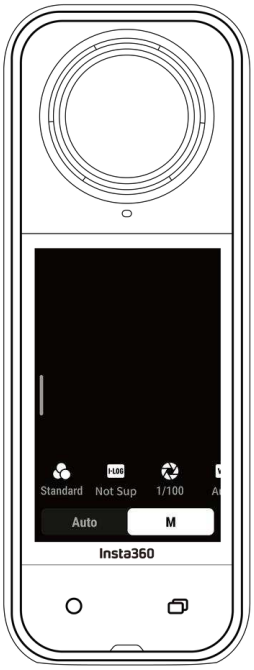

360° Mode and Single-Lens Mode support different parameters in different shooting modes.

Shooting Mode	Parameters
Shutter Speed	Controls the time it takes for light to enter the camera. The faster the shutter speed, the clearer the image. Make this higher for dynamic shots and lower for low light conditions.
Sensitivity (ISO)	Reflects how sensitive the sensor is to light. A higher sensitivity means the camera can capture more light for a brighter image.
Exposure Compensation Value (EV)	In Auto Mode, you can adjust the EV to help with overexposure or underexposure.

White Balance (WB)	Removes unrealistic colors and tones so colors are accurately captured in the image. A higher white balance produces warmer tones, lower results in cooler tones.
Jitter Blur Reduction	Improves motion blur and stabilization in low light environments. In extreme environments, the image will be darker and may have some flickering.
Filters	Add different color tones and effects.
Balanced Exposure	The screen will automatically equalize the exposure according to the environment.
I-Log	Professional color profile, captures more detail and provides more scope for color grading in post-production.
Metering Mode	Face Priority prioritizes the face for brightness. Matrix ensures accurate exposure of the whole image.
Low Light Enhancement	Allows clearer and more stable footage up to 5.7K30fps. In bright environments, turn this off for better battery life.

- 360° Mode:

Shooting Mode	**Parameters**	
	Auto	**Manual**
Video	Filters, I-Log, EV, Jitter Blur Reduction, WB, Balanced Exposure	Filters, I-Log, Shutter, ISO, WB
PureVideo	Filters, EV, WB,, Balanced Exposure	
InstaFrame	Low Light Enhancement, Filters, EV, WB, Jitter Blur Reduction	
Timelapse	Filters, EV, WB, Jitter Blur Reduction, Balanced Exposure	Filters, Shutter, ISO, WB

TimeShift	Filters, EV, WB, Jitter Blur Reduction, Balanced Exposure	Filters, Shutter, ISO, WB
Bullet Time	Filters, EV, WB	
Loop Recording	Low Light Enhancement, Filters, I-Log, EV, Jitter Blur Reduction, Balanced Exposure	Filters, I-Log, Shutter, ISO, WB
Road Mode	Low Light Enhancement, Filters, I-Log, EV, Jitter Blur Reduction, Balanced Exposure	Filters, I-Log,
Starlapse	EV, WB	Shutter, ISO, WB
Burst Photos	EV, WB	Shutter, ISO, WB
Interval	EV, WB	Shutter, ISO, WB
Photo	EV, WB	Shutter, ISO, WB

- Single-Lens Mode:

Shooting Mode	**Parameters**	
	Auto	**Manual**
Video	Filters, EV, WB, Metering Mode, Jitter Blur Reduction	Filters, Shutter, ISO, WB
FreeFrame Video	Filters, EV, WB, Metering Mode, Jitter Blur Reduction	Filters, Shutter, ISO, WB
Me Mode	Filters, EV, WB, Jitter Blur Reduction	Filters, Shutter, ISO, WB
Loop Recording	Filters, EV, WB, Metering Mode, Jitter Blur Reduction	Filters, Shutter, ISO, WB
Photo	EV, WB, Metering Mode	Shutter, ISO, WB

Album Page

Swipe right from the left of the touchscreen to enter the Album page.

Indicator Lights

Camera Status	Indicator Light Status
Powered on/Standby/Standby (charging) Pre-recording/USB Mode	Solid cyan
Start shooting with QuickCapture	Flashing cyan three times
Power off	Flashing cyan five times
Charging (powered off)	Solid orange
Recording a video	Flashing red
InstaFrame (Selfie View) Recording	Flashing green
InstaFrame (Selfie View) 360° spin/barrel roll (Standby or recording)	Flashing green rapidly
InstaFrame (Custom View) 360° spin/barrel roll (Recording)	Flashing red
InstaFrame (Custom View) 360° spin/barrel roll (Standby)	Flashing cyan rapidly
Updating firmware	Flashing blue
Insufficient storage/File error/USB error	Solid yellow
Low Battery/Charging Error Temperature too high/too low	Flashing yellow three times
Reverse charging	Flashing green

File Storage

Please use exFAT format microSD cards of speed classes UHS-I and V30 or above to ensure normal recording. The maximum supported storage space is 1TB.

We recommend using the official memory card available on the Insta360 Store. If you use another memory card, the following have also been tested to be compatible with X5:

Micro SD Cards	Model Number	Capacity	Speed Class
Insta360 microSD V30 A1	64G	64G	U3，A1，V30
	128G	128G	U3，A1，V30
SanDisk Extreme V30 A1	SDSQXVF-032G-GN6MA	128G	V30
SanDisk Extreme Pro V30 A1	SDSQXCG-064G-GN6MA	64G	V30
SanDisk Extreme V30 A2	SDSQXAH-064G-GN6GN	64G	U3，A2，V30
	SDSQXAA-128G-GN6GN	128G	U3，A2，V30
	SDSQXAV-256G-GN6GN	256G	U3，A2，V30
	SDSQXA1-512G-ZN6MA	512G	U3，A2，V30
	SDSQXA1-1T00-ZN6MA	1TB	U3，A2，V30
SanDisk Extreme Pro V30 A2	SDSQXCU-064G-GN6MA	64G	U3，A2，V30
	SDSQXCY-128G-ZN6MA	128G	U3，A2，V30
	SDSQXCD-256G-GN6MA	256G	U3，A2，V30
	SDSQXCZ-512G-ZN6MA	512G	U3，A2，V30
	SDSQXCD-1T00-GN6MA	1TB	U3，A2，V30

Lexar 1066x microSD UHS-I SILVER Series	LMS1066064G-BN	64G	V30
	LMS1066128G-BN	128G	V30
	LMS1066256G-BN	256G	V30
	LMS1066512G-BN	512G	V30

Format MicroSD Card

It is recommended to regularly transfer camera files to a phone or computer for backup and format the microSD card via the camera or Insta360 app to avoid any storage issues.

- Format via X5:

1. Insert the microSD card into X5.
2. Power on X5.
3. Swipe down on the touchscreen to enter the Shortcut Menu > Settings > SD Card > Format.

- Format via Insta360 app:

1. Connect X5 to your phone via the Insta360 app.
2. Enter app Settings > Device Settings > Camera Storage > Format.

Note: When formatting the card by computer, it needs to be in exFAT format, and the allocation unit size should be left as the default setting.

Attach External Devices

You can remove the USB Port Cover to attach external devices.

1. Open the USB Port Cover and pull it off.

2. Once removed, you can install external mics, the X5 Quick Reader, and other accessories.

3. When you're finished, reattach the USB Port Cover by hooking it onto the metal bar and closing it. Make sure it is tightly closed to ensure waterproofing is not affected.

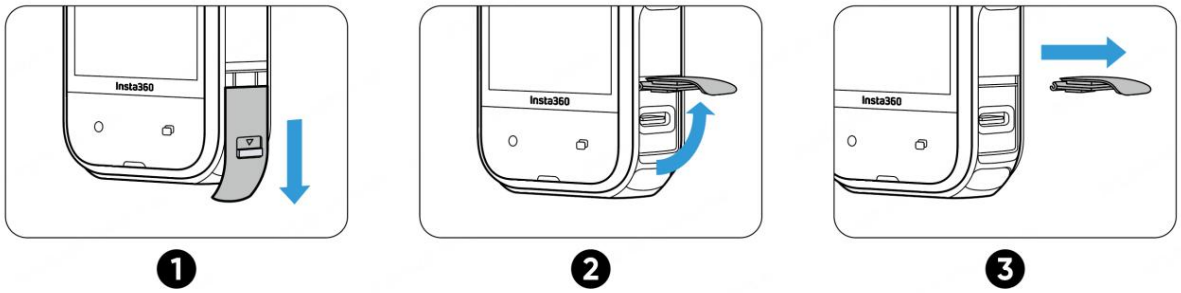

Transfer and Edit with the Insta360 App

Connect to the Insta360 App

1. Download the Insta360 app. Alternatively, search "Insta360" in the App Store or Google Play Store to download the Insta360 app.
2. Press the Power Button to turn on X5.
3. Enable Wi-Fi and Bluetooth on your smartphone.
4. Open the Insta360 app and click the camera icon at the bottom of the page. Follow the on-screen instructions to activate your camera.
5. If you connect to the Insta360 app for the first time, you need to authorize the connection on the touchscreen.

If you are unable to connect to the app, go to your smartphone's Wi-Fi settings, find your X5, enter the password and return to the app.

Note: You can change the camera's Wi-Fi password on the app settings page.

Still can't connect to the Insta360 app?

1. Check if the Insta360 app has permission for the following: network permission, Bluetooth permission, or local network permission.
2. Check if Wi-Fi is enabled on your camera.
3. Make sure X5 is close enough to the phone.

File Transfer

You can download camera files to your phone or PC, then use the Insta360 app or Insta360 Studio to edit and export.

File transfer from camera to phone

Wireless Connection (iOS/Android)

1. Connect the camera to the Insta360 app.

2. Open the app's album page.

3. Tap the top right icon to select the files you want to transfer.

  1. Tap the export icon to save it to your phone's album. Do not exit the app or lock your phone while exporting.

  2. Tap the download icon to download the footage to the app's gallery.

If your camera can't connect to the Insta360 app, try the following:

1. Update the camera and app to the latest version.

2. Check your phone's Wi-Fi settings to see if it's connected. If not, enter the Wi-Fi password and restart your camera and phone before trying again. If it's still not connecting, forget the camera's Wi-Fi network in your phone settings and attempt to reconnect.

3. Make sure the Insta360 app has GPS and Bluetooth permissions enabled. On Android devices, disable WLAN+ or auto-switch Wi-Fi (if available). On iOS devices, go to system settings, select Insta360, and turn on "Local Network."

File transfer from camera to computer

(Mac/Windows)

1. Use the official USB-C cable to connect the camera to your computer.

2. Power on the camera and select File Transfer. Wait for the computer to recognize the camera drive.

3. Open DCIM > Camera01 folder and copy photos/videos from this folder to your computer.

If your camera can't connect, try the following:

1. Ensure the camera's firmware is up to date.
2. Use the official USB-C cable for transfer, as non-official cables may have compatibility issues.
3. Make sure the camera is powered on.

File transfer from Insta360 app to Mac

- **iPhone**

1. Connect your iPhone to your Mac.
2. In the Finder window on your Mac, select your iPhone.
3. At the top of the Finder window, click Files, then do one of the following:

   -Transfer from Mac to iPhone: Create a new folder and name it IMPORT on your desktop. Drag your files to the IMPORT folder and then into the Insta360 app folder on your device.

   -Transfer from iPhone to Mac: Click the small triangle beside the Insta360 app to see the DCIM folder, then drag the desired files to a folder on your Mac.

Notes:

a. The folder must be named IMPORT with capital letters.
b. You may not be able to see the transfer progress. Please wait for it to finish.
c. After transferring, restart the Insta360 app on your phone to see the files.

- **Android**

1. Install Android File Transfer on your Mac.
2. Connect your phone to the Mac and open Android File Transfer.
3. Find "data > com.arashivision.insta360akiko > files > Insta360OneR > galleryOriginal".
4. Browse the files and folders on your Android device, then copy and paste or drag them to a folder on your Mac.

File transfer from Insta360 app to Windows PC

- **iPhone**

1. Install iTunes on your Windows PC. Connect your iPhone to your PC, open iTunes, then complete the authorization process according to the instructions.

2. After successful authorization, click the iPhone icon in the top left corner, and the iPhone's files will appear.

3. Click "File Sharing" and choose "Insta360" from the list. Then do one of the following:

   - Transfer from iPhone to Windows PC: Find the DCIM folder, then click Save. Choose your desired path and click Save.

   - Transfer from Windows PC to iPhone: Create a new folder and name it IMPORT, then copy the photos/videos to the IMPORT folder. Replace the IMPORT folder in the Insta360 app.

Notes:

1. The folder must be named IMPORT with capital letters.

2. After transferring, restart the Insta360 app on your phone to see the files.

- **Android**

1. Connect your Android phone to your PC. Choose "Manage Files" under "USB Connected" on the phone if required.

2. Click "My Computer/This Computer", find your phone model, and click "Internal Storage".

3. Find "data > com.arashivision.insta360akiko > files > Insta360OneR > galleryOriginal", then do one of the following:

-Transfer from Android to Windows PC: Copy the folder or files to your PC.

- Transfer from Windows PC to Android: Copy files to this folder from your PC

Editing

You can view and edit your 360° and flat footage in the Insta360 app or Insta360 Studio.

- **Insta360 App**

Album Page

1. Connect X5 to the Insta360 app.
2. Enter the Album page to view all your clips.
3. Open your flat or 360° footage and edit them in the player.

Edit Page

1. Connect your X5 to the Insta360 app.
2. Head to the Edit page. You can open and edit your footage in "Create a Video", or use AI to automatically edit your clips with "Auto Edit". Try out the AI templates, themes and effects with FlashCut and Shot Lab for viral videos in seconds.

- **Insta360 Studio**

1. Download and open Insta360 Studio on your computer from the Insta360 website.
2. Connect your camera or SD card to your PC and import your media.
3. Edit with Studio's extensive tools and library, or use its Abobe Premiere plugin for even more options.

Maintenance

Find Your Serial Number

1. Product Box

The camera's serial number is on the back of the original product box.

2. Camera Settings

（1）Power on your camera.

（2）wipe down on the touchscreen to access the Shortcut Menu, then go to Settings > Camera Info to view the serial number.

3. **Insta360 App**

（1）Connect your camera to the Insta360 app.

（2）Enter app Settings > Device Information to view the serial number.

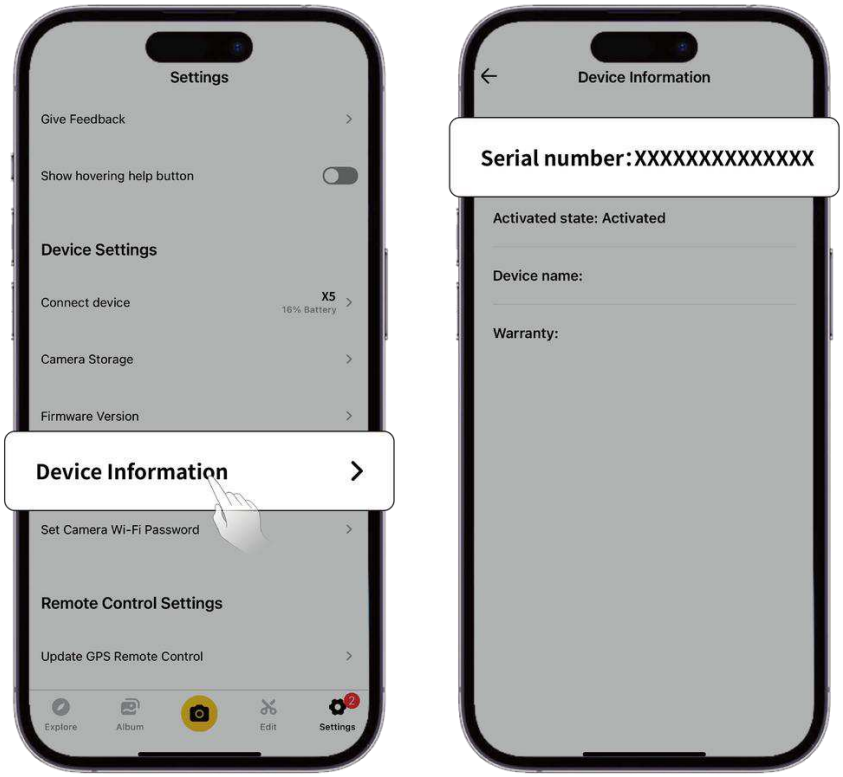

4. **Insta360 Studio**

（1）Launch Insta360 Studio on your computer and import any footage recorded by the camera.

（2）Select the footage and click the info icon on the right side of your screen to access File Properties and view the serial number.

5. **Battery Compartment Label**

After removing the battery, you can find the camera's serial number below the barcode on the label.

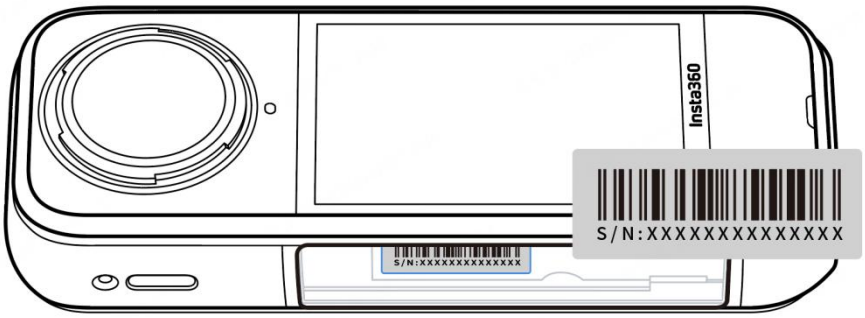

Firmware Update

Firmware updates will be regularly available for X5 to ensure it runs efficiently. Please update to the latest version for optimal results.

Before updating the firmware, ensure X5 has at least 20% battery remaining.

- **Update via Insta360 app:**

Connect X5 to the Insta360 app. The app will notify you if a new firmware update is available. Follow the on-screen instructions to update the firmware.

If the camera firmware update fails, check the following and try the update again:

1. Ensure the camera is close to your phone.
2. Keep the Insta360 app running, and do not exit or minimize it.
3. Ensure your phone has a strong and stable network connection.

Once the above conditions are confirmed, restart the camera and try the firmware update again. If it still fails, try to update the firmware via a computer.

- **Update via Computer**

1. Make sure X5 is powered on.
2. Connect the camera to the computer using the USB-C cable and select File Transfer in USB Mode.
3. Download the latest firmware version from the official Insta360 website on your computer.
4. Once the computer has recognized X5, copy the "Insta360X5FW.bin" file to X5's root directory. Do not change the file name.
5. Disconnect X5 from the computer. X5 will automatically power off. The Indicator Lights will slowly flash blue.
6. X5 will automatically restart once the update is complete.

Lens Guards

1. Before use, please clean the area around the lens and the surface of the lens to ensure everything is clean and dry before installation. Any foreign objects on the lens or lens guard may affect the camera's shooting results.
2. After installing the lens guard, check if the camera has successfully recognized and displayed the "Lens Guard Mode" icon. After removing the lens guard, check that the icon disappears.
3. Keep the lens guard clean as dirt or scratches on the surface may affect image quality.
4. The lens guard is not a sealed structure. Please avoid using it in water-related activities such as surfing or on rainy days.
5. For underwater shooting, please use a dedicated dive case or relevant accessories for the camera. When using a dive case, remove the lens guard before use.
6. Keep the lens guard and surrounding area completely dry. If exposed to snow, water, or fog, use a soft cloth to wipe it dry before using. Otherwise, fogging may appear on the inside of the lens guard.
7. When removing the lens guard, be careful not to scratch the camera lens.

Waterproofing

1. X5 has a waterproof depth rating of up to 15 meters (49 feet). Remember to remove the lens guards before use in/around water.

2. Due to the difference in the refractive indices of water and air, shooting with X5 underwater in 360° Mode may have stitching issues. To ensure optimal stitching, it is recommended to use the Invisible Dive Case for underwater shooting.

3. Before use, please check and ensure that the camera's battery compartment waterproof seal and the USB Port Cover seal are:

    a. Intact and free from dirt or debris.

    b. Tightly closed with the orange indicator fully hidden.

    Failure to do so may affect waterproofing. If necessary, clean with a lint-free cloth.

4. After using X5 in seawater, please follow these precautions:

    a. Rinse the camera with fresh water.

    b. Soak the camera in fresh water for 5–10 minutes.

    c. Finally, wipe it dry with a soft cloth and place it in a well-ventilated area to air dry. Only when the camera surface is dry should you proceed with removing the battery or other operations.

To maintain X5's waterproofing:

1. Do not use a hair dryer to dry the camera as it may affect the microphone and speaker and/or damage the internal waterproofing.

2. Avoid operating the camera for extended periods (>1 hour) outside the recommended temperature range (-4°F to 104°F/-20℃ to 40℃) or in humid environments.

3. When using the camera, avoid sudden changes in temperature or humidity, as this may cause condensation on the camera's surface or inside, affecting the shooting quality.

4. Avoid entering water at high speeds, as excessive water impact and pressure may damage the device.

5. Ensure the camera's Battery Cover and USB Port Cover are installed and securely closed.

Cleaning

1. If there are foreign objects, such as dirt or hair, on the lenses or lens guards, clean it with a lens pen, air blower or cloth.

2. Ensure the Battery and Battery Cover are free of dirt and foreign objects like sand or hair. Clean it with a soft, dry cloth or paper if necessary.

3. Ensure the MicroSD Card slot is free of dust, dirt, and sand, so the camera works properly.

Battery Precautions

1. Only use batteries provided by Insta360 designed for X5. Insta360 is not responsible for any accidents or failures that occur due to using unofficial batteries. If you need to replace the battery, please purchase it from the Insta360 official store.

2. Avoid using the battery outside the recommended temperature range (-4°F to 104°F/-20℃ to 40℃). Temperatures outside of this may cause the battery to expand, catch fire or even explode. Before using the camera in a low-temperature environment, fully charge the battery in a regular-temperature environment first to extend the battery life.

3. If the battery is not used for a long time, its performance will be affected.

4. Recharge and discharge the battery every three months to maintain optimal working conditions.

Arashi Vision Inc.

ADD: 11th Floor, Building 2, Jinlitong Financial Center, Bao'an District, Shenzhen, Guangdong, China

WEB: www.insta360.com

TEL: 400-833-4360 +1 800 6920 360

EMAIL: service@insta360.com

V1.0