COPYRIGHT © Hangzhou EZVIZ Software Co., Ltd. ALL RIGHTS RESERVED.
Any and all information, including, among others, wordings, pictures, graphs are the properties of Hangzhou EZVIZ Software Co., Ltd. (hereinafter referred to as "EZVIZ"). This user manual (hereinafter referred to as "the Manual") cannot be reproduced, changed, translated, or distributed, partially or wholly, by any means, without the prior written permission of EZVIZ. Unless otherwise stipulated, EZVIZ does not make any warranties, guarantees or representations, express or implied, regarding to the Manual.

About this Manual

The Manual includes instructions for using and managing the product. Pictures, charts, images and all other information hereinafter are for description and explanation only. The information contained in the Manual is subject to change, without notice, due to firmware updates or other reasons. Please find the latest version in the EZVIZ ™ website (http://www.ezviz.com).

Revision Record

New release – January, 2024

Trademarks Acknowledgement

EZVIZ ™, ™, and other EZVIZ's trademarks and logos are the properties of EZVIZ in various jurisdictions. Other trademarks and logos mentioned below are the properties of their respective owners.

Legal Disclaimer

TO THE MAXIMUM EXTENT PERMITTED BY APPLICABLE LAW, THE PRODUCT DESCRIBED, WITH ITS HARDWARE, SOFTWARE AND FIRMWARE, IS PROVIDED "AS IS", WITH ALL FAULTS AND ERRORS, AND EZVIZ MAKES NO WARRANTIES, EXPRESS OR IMPLIED, INCLUDING WITHOUT LIMITATION, MERCHANTABILITY, SATISFACTORY QUALITY, FITNESS FOR A PARTICULAR PURPOSE, AND NON-INFRINGEMENT OF THIRD PARTY. IN NO EVENT WILL EZVIZ, ITS DIRECTORS, OFFICERS, EMPLOYEES, OR AGENTS BE LIABLE TO YOU FOR ANY SPECIAL, CONSEQUENTIAL, INCIDENTAL, OR INDIRECT DAMAGES, INCLUDING, AMONG OTHERS, DAMAGES FOR LOSS OF BUSINESS PROFITS, BUSINESS INTERRUPTION, OR LOSS OF DATA OR DOCUMENTATION, IN CONNECTION WITH THE USE OF THIS PRODUCT, EVEN IF EZVIZ HAS BEEN ADVISED OF THE POSSIBILITY OF SUCH DAMAGES.

TO THE MAXIMUM EXTENT PERMITTED BY APPLICABLE LAW, IN NO EVENT SHALL EZVIZ'S TOTAL LIABILITY FOR ALL DAMAGES EXCEED THE ORIGINAL PURCHASE PRICE OF THE PRODUCT.

EZVIZ DOES NOT UNDERTAKE ANY LIABILITY FOR PERSONAL INJURY OR PROPERTY DAMAGE AS THE RESULT OF PRODUCT INTERRUPTION OR SERVICE TERMINATION CAUSED BY: A) IMPROPER INSTALLATION OR USAGE OTHER THAN AS REQUESTED; B) THE PROTECTION OF NATIONAL OR PUBLIC INTERESTS; C) FORCE MAJEURE; D) YOURSELF OR THE THIRD PARTY, INCLUDING WITHOUT LIMITATION, USING ANY THIRD PARTY'S PRODUCTS, SOFTWARE, APPLICATIONS, AND AMONG OTHERS.

REGARDING TO THE PRODUCT WITH INTERNET ACCESS, THE USE OF PRODUCT SHALL BE WHOLLY AT YOUR OWN RISKS. EZVIZ SHALL NOT TAKE ANY RESPONSIBILITES FOR ABNORMAL OPERATION, PRIVACY LEAKAGE OR OTHER DAMAGES RESULTING FROM CYBER ATTACK, HACKER ATTACK, VIRUS INSPECTION, OR OTHER INTERNET SECURITY RISKS; HOWEVER, EZVIZ WILL PROVIDE TIMELY TECHNICAL SUPPORT IF REQUIRED. SURVEILLANCE LAWS AND DATA PROTECTION LAWS VARY BY JURISDICTION. PLEASE CHECK ALL RELEVANT LAWS IN YOUR JURISDICTION BEFORE USING THIS PRODUCT IN ORDER TO ENSURE THAT YOUR USE CONFORMS TO THE APPLICABLE LAW. EZVIZ SHALL NOT BE LIABLE IN THE EVENT THAT THIS PRODUCT IS USED WITH ILLEGITIMATE PURPOSES.

IN THE EVENT OF ANY CONFLICTS BETWEEN THE ABOVE AND THE APPLICABLE LAW, THE LATTER PREVAILS.

Table of Contents

Overview 1

1. Package Contents 1
2. Basics 1

Get the EZVIZ App 2

Connect to the Internet 3

For Wi-Fi Camera 3

For PoE Camera 4

Installation 6

1. Micro SD Card Installation (Optional) 6
2. Installation Location 6
3. Installation Procedure 6
4. Waterproof Kit Installation (Optional) 9

Operations on the EZVIZ App 10

1. Live View 10
2. Settings 11

EZVIZ Connect 12

1. Use Amazon Alexa 12
2. Use Google Assistant 13

FAQ 14

Initiatives on the Use of Video Products 15

Overview

1. Package Contents

Camera (x1)

Drilling Template (x1)

Waterproof Kit (x1)

Screw Kit (x1)

Power Adapter (x1)

Regulatory Information (x1)

Quick Start Guide (x1)

The power adapter's appearance is subject to the one you have bought.

2. Basics

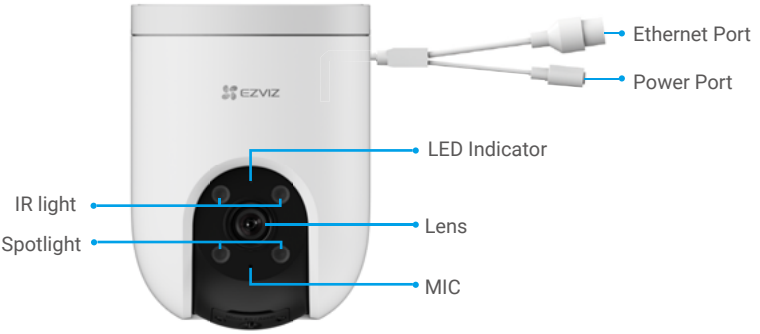

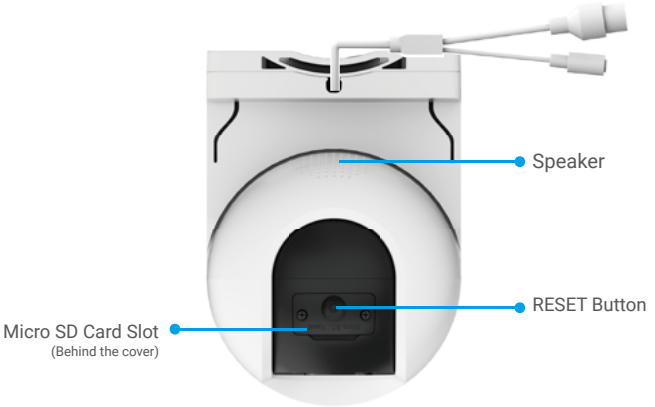

Name	Description	
RESET Button	When the camera is working, press and hold for about 5s and all parameters will be restored to default settings.	
Micro SD Card (sold seperately)	Initialize the card in the EZVIZ app before using it. Recommended compatibility: Class 10, maximum space 512GB.	
LED Indicator		Solid Red: Camera starting up.
		Slow-flashing Red: Network exception.
		Fast-flashing Red: Camera exception (e.g. Micro SD card error).
		Solid Blue: App visiting camera.
		Slow-flashing Blue: Camera running properly.
		Fast-flashing Blue: Camera ready for Wi-Fi connection.

Get the EZVIZ App

1. Connect your mobile phone to Wi-Fi (suggested).
2. Download and install the EZVIZ app by searching for “EZVIZ” in the App Store or Google Play™.
3. Launch the app and register an EZVIZ user account.

EZVIZ App	
Download on the App Store	GET IT ON Google Play

If you have already used the app, please make sure that it is the latest version. To find out if an update is available, go to the app store and search for "EZVIZ".

Connect to the Internet

For Wi-Fi Camera

1. Connect the power adapter cable to the camera's power port.
2. Plug the power adapter into an electrical outlet.

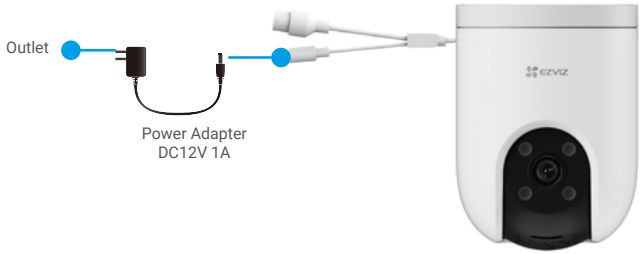

The LED turning fast-flashing blue indicates that the camera is powered on and ready for network configuration.

3. Connect the camera to the Internet. There are two ways: wired connection or wireless connection.

Wired Connection	**Wireless Connection**
Connect the camera to the LAN port of your router with the Ethernet cable (purchase separately)	You can connect your phone to Wi-Fi. • Please connect your camera to the Wi-Fi to which your mobile phone has been connected. • The band of the Wi-Fi must be 2.4 GHz. • Press and hold the reset button for about 5s, and you can restart the camera and restore all parameters to default. • Press and hold the reset button for about 5s in any of the following cases: * The camera fails to connect to your Wi-Fi network. * You want to connect the camera to another Wi-Fi network.
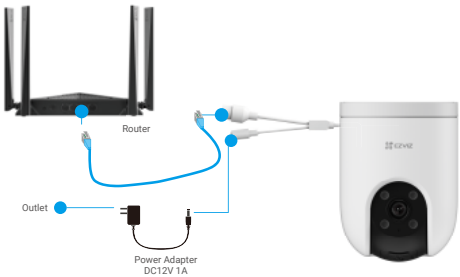	

4. Add your camera to EZVIZ.

- Log in to your account using the EZVIZ app.
- On the Home screen, tap “+” on the upper-right corner to go to the Scan QR Code interface.
- Remove the mounting bracket of the camera.
- Scan the QR code on the Quick Start Guide cover or on the inner top side of the camera.

- Follow the EZVIZ app wizard to add the camera to EZVIZ.

For PoE Camera

1. Connect the camera to the power supply.
There are two power supplying ways for PoE camera: with PoE switch or with power adapter.

With PoE switch	**With power adapter**
Connect the camera and the PoE switch with the network cable (purchase separately), and then connect to the internet.	Connect the power adapter cable to the camera’s power port, and then plug the power adapter into an electrical outlet. ⓘ The LED turning fast-flashing blue indicates that the camera is powered on and ready for network configuration.
	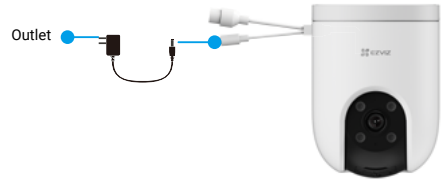

3. (For power supply with power adapter) Connect the camera to the LAN port of your router with the Ethernet cable (purchase separately).

The LED turning slow-flashing blue indicates that the camera is connected to the Internet.

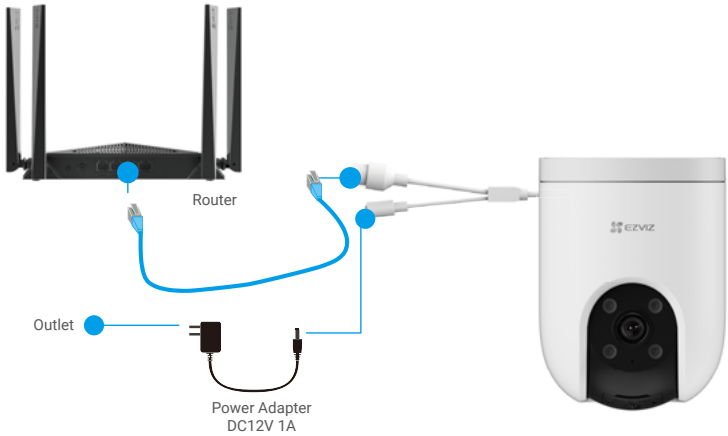

4. Add your camera to EZVIZ.

- Log in to your account using the EZVIZ app.
- On the Home screen, tap “+” on the upper-right corner to go to the Scan QR Code interface.
- Remove the mounting bracket of the camera.
- Scan the QR code on the Quick Start Guide cover or on the inner top side of the camera.

- Follow the EZVIZ app wizard to add the camera to the app.

Installation

1. Micro SD Card Installation (Optional)

1. Remove the cover on the camera.
2. Insert the micro SD card (sold separately) into the card slot.
3. Fix the cover to the camera.

After installing the micro SD card, you should initialize the card in the EZVIZ app before using it.

4. In the EZVIZ app, tap the Storage Status in the Device Settings interface to check the SD card status.
5. If the memory card status displays as Uninitialized, tap to initialize it.

The status will then change to **Normal** and then videos can be stored.

2. Installation Location

- Choose a location with a clear, unblocked field of view and with a good wireless signal.
- Make sure the wall is strong enough to withstand three times the weight of the camera.
- Camera cannot be installed with the lens facing direct sunlight.

3. Installation Procedure

The camera can be wall mounted, ceiling mounted, and pole mounted.

Bracket Separate

1. Use your thumb and forefinger to pinch two buckle stretch arms on two sides of the mounting bracket.
2. Take the camera off from the mounting bracket with your left hand as shown below.

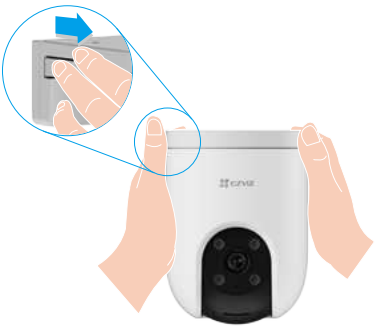

Bracket Assembly

Push the mounting bracket into the mounting slot on the top of the camera and clamp it into the place.

During installation process, please hang the cable clamp at the limit position of the camera to avoid affecting the subsequent installation of the camera and the mounting bracket.

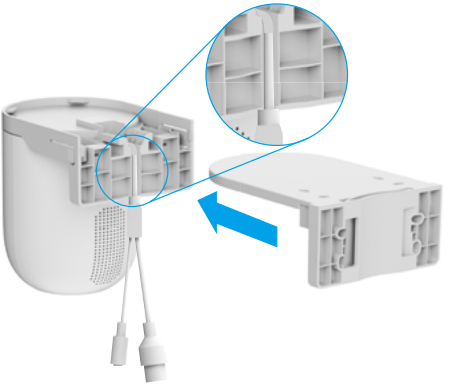

Ceiling/Wall Mount

1. Remove the protective film from the lens.
2. Stick the drilling template onto a clean and flat surface.
3. (For cement wall only) Drill screw holes according to the template, and insert anchors.
4. Use screws (PA4x25) to fix the mounting bracket on the installation surface.
5. Push the camera onto the mounting bracket.

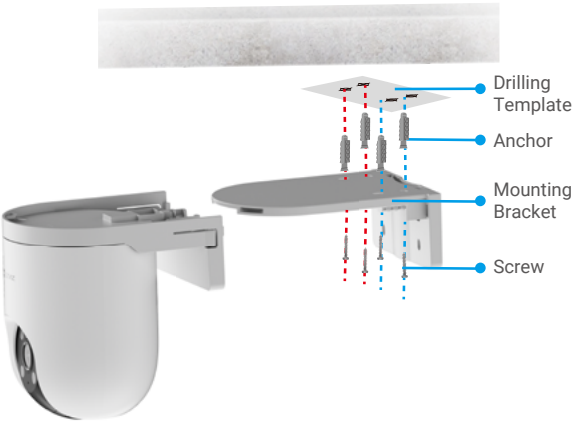

Fig. 1 Ceiling Mount

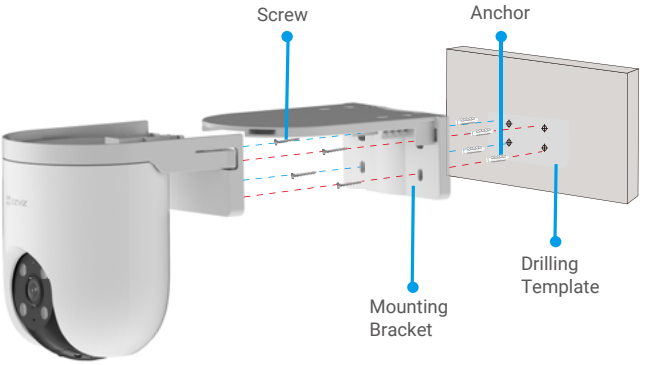

Fig. 2 Wall Mount

Pole Mount

1. Remove the protective film from the lens.
2. Use the cable tie (not provided in the package) to fix the mounting bracket to the pole.
3. Push the camera onto the mounting bracket

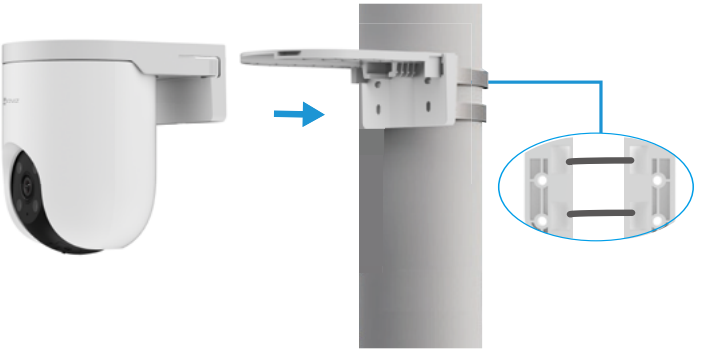

4. Waterproof Kit Installation (Optional)

If the camera is installed outdoors or in humid environments, please use the waterproof kit.

1. Insert the gasket into the Ethernet port of the camera.

2. Thread A through the nut, the gasket and the endcap.

3. Tighten the nut and the endcap.

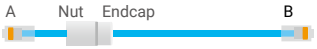

4. Thread A into the Ethernet port of the camera and tighten the nut.

5. Connect B to the LAN port of the router.

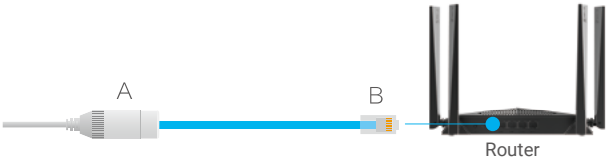

Operations on the EZVIZ App

The app interface may be different due to version update, and the interface of the app you installed on your phone shall prevail.

1. Live View

When you launch the EZVIZ app, the device page displays as shown below.
You can watch a live feed, take snapshots, record videos, or choose video definition as needed.

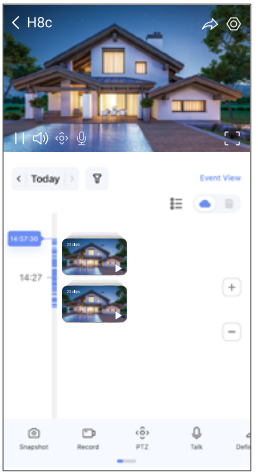

Swipe left and right across the screen to see more icons.

Icon	Description
	Share. Share your device with anyone you want.
	Settings. View or change the device settings.
	Snapshot. Take a snapshot.
	Record. Manually start/stop recording.
	PTZ. Rotate the camera to get broader field of view.
	360° Picture. Tap to generate a 360 degree view picture.
	Talk. Tap the icon, and then follow the on-screen instructions to talk to or listen to people in front of the camera.
	Alarm. Sound and flash to deter intruders.
	Full screen display. Tap to enjoy a full screen display for your filed of view.
	PiP. View the video displayed on top of another app you are using.
	Floodlight. Tap to lighten the field of view.
	Definition. Select video resolution from Full HD, Hi-Def or Standard.
	Nearby Device. Tap to select window layouts.
	Sleep. Tap to enable sleep mode for the device.
	Tips. Tap to learn about some features of the device.

2. Settings

Parameter	Description
Intelligent Detection	You can select between Human Shape Detection and Image Change Detection for your device.
Message Notification	You can manage the device message and EZVIZ APP notification.
Audio Settings	You can set relevant audio parameters for your device.
Image Settings	You can set relevant image parameters for your device.
Light Settings	"When disabled, the devicell indicator will be off. The device indicator will still be on, when the device is charging or the device is exception.
PTZ Settings	You can set parameters of PTZ for your device, like PTZ position calibration and 360° Picture here.
Record List	You can see micro SD card capacity, used space and free space here, and also you can enable or disable cloud storage service here.
Privacy Settings	You can encrypt your videos with encryption password and customize the privacy area.
Network Settings	You can see the connection status.
Device Information	You can see the device information here.
Share Device	You can share the device to you family members or guests.
CloudPlay	You can subscribe and manage the cloud storage.
Restart Device	Tap to restart the device.
Delete Device	Tap to delete the devic e from EZVIZ App.

EZVIZ Connect

1. Use Amazon Alexa

These instructions will enable you to control your EZVIZ devices with Amazon Alexa. If you run into any difficulties during the process, please refer to **Troubleshooting**.

Before you start, make sure that:

1. EZVIZ devices are connected to the EZVIZ app.
2. In the EZVIZ app, turn off the "Video Encryption" and turn on the "Audio" in the Device Settings page.
3. You have an Alexa-enabled device (i.e Echo Spot, Echo-Show, All-new Echo-Show, Fire TV (all generations), Fire TV stick (second generation only), or Fire TV Edition smart TVs).
4. The Amazon Alexa app is already installed on your smart device, and you have created an account.

To Control EZVIZ devices with Amazon Alexa:

1. Open the Alexa app and select "Skills and Games" from the menu.
2. On the Skills and Games screen, search for "EZVIZ", and you will find "EZVIZ" skills.
3. Select your EZVIZ device's skill, then tap **ENABLE TO USE**.
4. Enter your EZVIZ username and password, and tap **Sign in**.
5. Tap the **Authorize** button to authorize Alexa to access your EZVIZ account, so that Alexa can control your EZVIZ devices.
6. You will see "EZVIZ has been successfully linked", then tap **DISCOVER DEVICES** to allow Alexa to discover all your EZVIZ devices.
7. Go back to Alexa app menu and select "Devices", and under devices you will see all your EZVIZ devices.

Voice Command

Discover a new smart device via the "Smart Home" menu in the Alexa app or the Alexa Voice Control function.
Once the device is found, you can control it with your voice. Speak simple commands to Alexa.

Your device's name for example: "show xxxx camera," can be changed in the EZVIZ app. Each time you change the name of the device, you will need to discover the device again to update the name.

Troubleshooting

What should I do if Alexa fails to discover my device?

Check if there are any Internet connecting problems.

Try to restart the smart device and re-discover the device on Alexa.

Why the device's status is "Offline" on Alexa?

Your device might have been disconnected from the network. Restart the smart device and re-discover on Alexa.

Check if your router is connected to the Internet and try again.

For details about countries where Amazon Alexa is available, see Amazon Alexa's official website.

2. Use Google Assistant

With the Google Assistant, you can activate your EZVIZ device and watch live by speaking Google Assistant voice commands.

The following devices and apps are required:

1. A functional EZVIZ app.
2. In the EZVIZ app, turn off the "Video Encryption" and turn on the "Audio" in the Device Settings page.
3. A TV with functional Chromecast connecting to it.
4. The Google Assistant app on your phone.

To get started, follow the steps below:

1. Set up the EZVIZ device and make sure it works properly on the app.
2. Download the Google Home app from the App Store or Google Play Store™ and log into your Google account.
3. On the Myhome screen, tap “+” on the upper-left corner, and select "Set up device" from the menu list to go to the Set up interface.
4. Tap **Works with Google**, and search for "EZVIZ", where you will find "EZVIZ" skills.
5. Enter your EZVIZ username and password, and tap **Sign in**.
6. Tap the **Authorize** button to authorize Google to access your EZVIZ account, so that Google can control your EZVIZ devices.
7. Tap **Return to app**.
8. Follow the above steps to complete the authorization. When synchronization is completed, EZVIZ service will be listed under your list of services. To see a list of compatible devices under your EZVIZ account, tap on the EZVIZ service icon.
9. Now try some commands. Use the name of the camera that you created when you set up the system.

Users can manage devices as a single entity or in a group. Adding devices to a room allows users to control a group of devices at the same time using one command.

See the link for more information:

https://support.google.com/googlehome/answer/7029485?co=GENIE.Platform%3DAndroid&hl=en

FAQ

Q: If the camera is offline on the App, will the video recording continue?

A: If the camera is powered on but disconnected from the Internet, then local recording will continue but cloud recording will stop. If the camera is powered off, both video recordings will stop.

Q: Why the alarm is triggered when nobody in the image?

A: Configure a lower value for the detection sensitivity. Please notice that vehicle and animals are also alarm triggering sources.

Q: How to use the micro SD card for local storage?

A: 1. Make sure that there is a micro SD card inserted and that the camera is added to your EZVIZ account. Open the EZVIZ app and enter the “Device Details” interface, if the “Initialize Storage Card” button appears, you need to initialize the micro SD card first.

2. The micro SD card recording for the motion detection is enabled by default.

Q: The mobile phone cannot receive alarm prompts when the camera is online.

A: 1. Make sure that the EZVIZ app is running on your mobile phone and that the Motion Detection Notification is enabled.

2. For Android system, make sure the app is running in background; and for iOS, enable the message push function in “Settings > Notification”.

3. If still no alarm prompts, press and hold the RESET button for about 5 seconds restore the camera settings.

Q: Live view or playback failed.

A: Make sure that your network is well connected. Watching live videos needs a good bandwidth. You can refresh the video, or change a network and try again.

i For additional information about the device, please refer to www.ezviz.com.

Initiatives on the Use of Video Products

Dear Valued EZVIZ Users,

Technology affects every aspect of our life. As a forward-looking tech company, we are increasingly aware of the role technology plays in improving efficiency and quality of our life. At the same time, we are also aware of the potential harm of its improper usage. For example, video products can record real, complete and clear images, therefore they hold great values in representing facts. Nevertheless, improper distribution, use and/or processing of video records may infringe on the privacy, legitimate rights and interests of others. Committed to innovating technology for the good, we at EZVIZ hereby earnestly advocate that every user shall use video products properly and responsibly, thus to collectively create a positive environment where all related practices and usage comply with applicable laws and regulations, respect individuals' interests and rights, and promote social morality. Here are EZVIZ's initiatives that we'd appreciate your attention:

1. Each individual possesses a reasonable expectation of privacy, and the use of video products should not be in conflict with such reasonable expectation. Therefore, a warning notice which clarifies the monitoring range should be displayed in a reasonable and effective manner, when installing video products in public areas. For non-public areas, the rights and interests of people involved shall be evaluated thoughtfully, including but not limited to, installing video products only after obtaining the consent of the stakeholders, and not installing highly-invisible video products without other's knowledge.

2. Video products objectively records footage of real activities within specific time and space. Users shall reasonably identify the people and rights involved in this scope in advance, to avoid any infringement of portrait, privacy or other legal rights of others while protecting themselves through video products. Notably, if you choose to enable the audio recording function on your camera, it will capture sounds, including conversations, within the monitoring range. We highly recommend a comprehensive assessment on the potential sound sources in the monitoring range, so as to fully understand the necessity and the reasonableness before you turn on the audio recording function.

3. Video products in use will consistently generate audio or visual data from real scenes –possibly including biometric information such as facial images – based on the user's selection of product features. Such data can be used or processed to use. Video products are only technological tools that do not and cannot humanly practice legal and moral standards to guide lawful and proper use of data. It is the methods and purposes of the people who control and use the generated data that make a difference. Therefore, data controllers shall not only strictly abide by applicable laws and regulations, but also fully respect non-obligatory rules including international conventions, moral standards, cultural norms, public order and local customs. Furthermore, we should always prioritize the protection of privacy and portrait rights, and other reasonable interests.

4. The video data continuously generated by video products carries the rights, values and other demands of various stakeholders. Thus, it is extremely crucial to ensure data security and shield the products from malicious intrusions. Every user and data controller shall, undertake all reasonable and necessary measures to maximize product and data security, avoiding data leakage, improper disclosure or misuse, including but not limited to, setting up access control, selecting a suitable network environment where video products are connected, establishing and constantly optimizing network security.

5. Video products have made great contributions to enhance the safety of our society, and we believe that they will continue to play a positive role in various aspects of our daily life. Any attempt to abuse these products to violate human rights or engage in unlawful activities contradicts the very essence of the value in tech innovation and product development. We encourage every user to establish your own methods and rules to evaluate and monitor the use of video products, so as to ensure that these products are always used properly, thoughtfully and with goodwill.