JBL by HARMAN

STAGE2 SPEAKERS

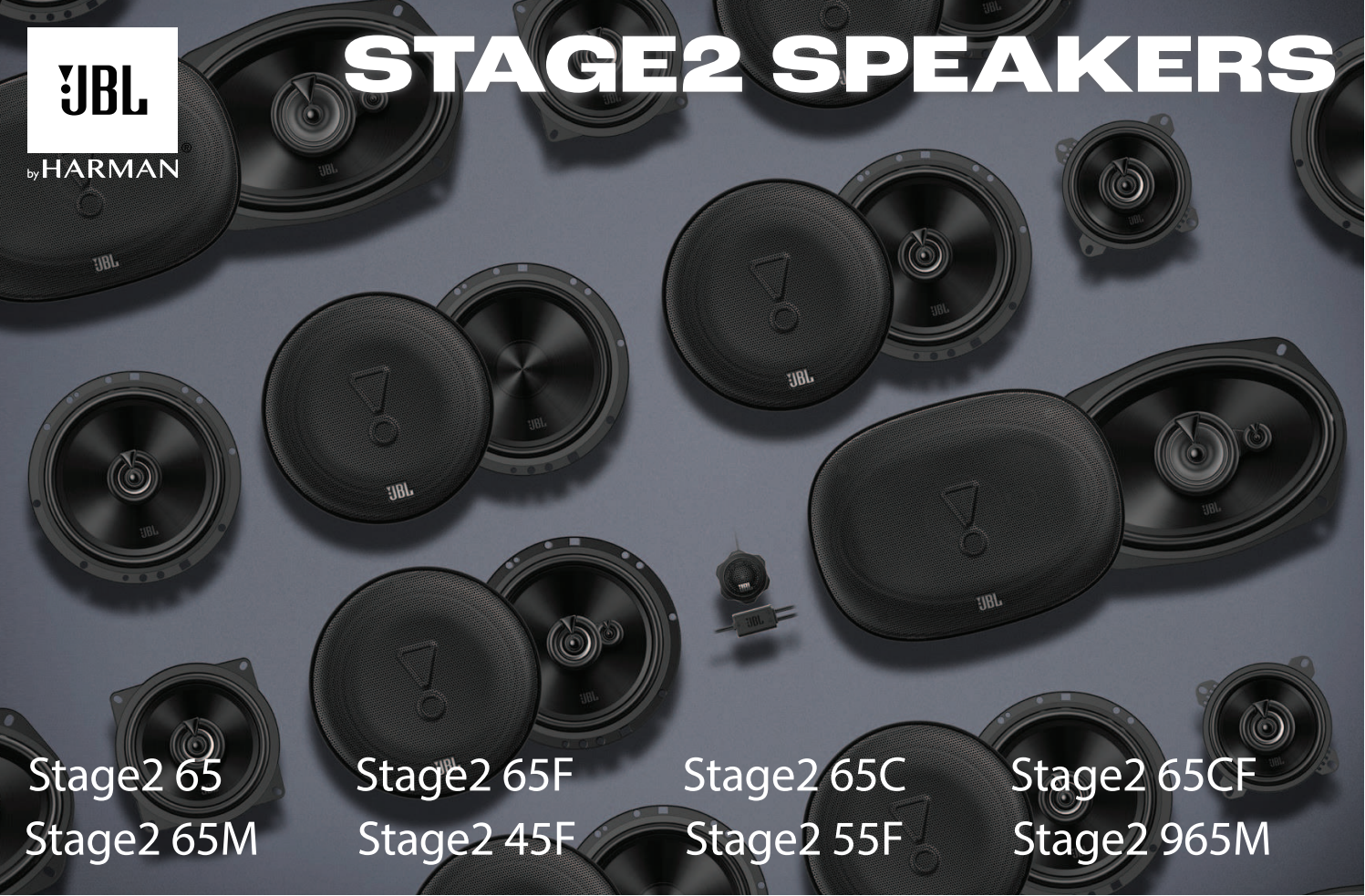

Stage2 65
Stage2 65M
Stage2 65F
Stage2 45F
Stage2 65C
Stage2 55F
Stage2 65CF
Stage2 965M

Stage2 65

Dimension

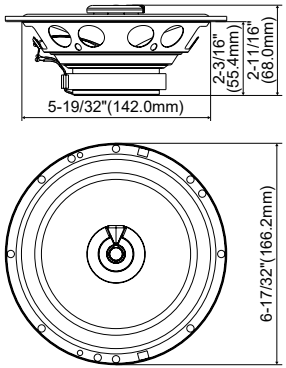

Connection

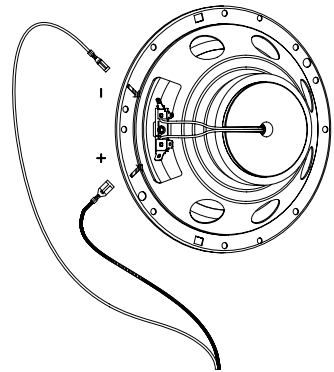

Installation

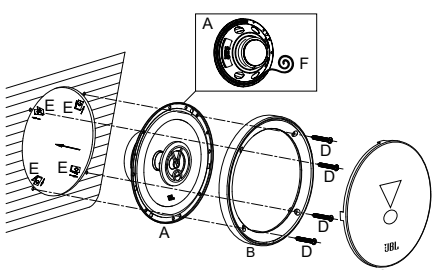

What's in the Box

A	B	C	D	E	F
2x	2x	2x	8x	8x	2x

Specifications

- Speaker: 6-1/2" (165mm) Coaxial Car Speaker with Grille
- Power Handling: *60W RMS, 480W peak
- Sensitivity (@2.83V): 90dB
- Frequency Response: 55Hz – 20kHz
- Nominal Impedance: 4ohm

Thiele-Small Parameters

- BL (Tm): 3.17
- DCR (Ohms): 3.18
- Mms (g): 9.779
- Sd (cm^2): 132.73
- Cms (um/N): 419
- Vas (L): 10.438
- Fs (Hz): 78.7
- Qes: 1.53
- Qms: 8.891
- Qts: 1.306
- Crossover Point: 5400Hz

*60W RMS: Long-term maximum power refer to IEC 60268
30W RMS: 100H continuous testing at rated power refers to IEC 60268

Stage2 65F

Dimension

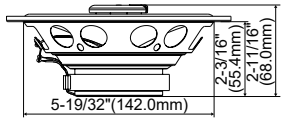

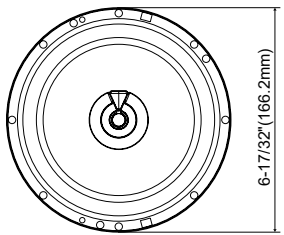

Connection

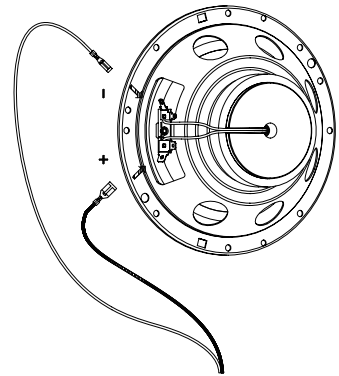

Installation

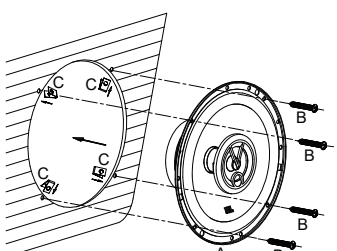

What's in the Box

A	B	C
2x	8x	8x

Specifications

- Speaker: 6-1/2" (165mm) Coaxial Car Speaker without Grille
- Power Handling: *60W RMS, 480W peak
- Sensitivity (@2.83V): 90dB
- Frequency Response: 55Hz – 20kHz
- Nominal Impedance: 4ohm

Thiele-Small Parameters

- BL (Tm): 3.17
- DCR (Ohms): 3.18
- Mms (g): 9.779
- Sd (cm^2): 132.73
- Cms (um/N): 419
- Vas (L): 10.438
- Fs (Hz): 78.7
- Qes: 1.53
- Qms: 8.891
- Qts: 1.306
- Crossover Point: 5400Hz

*60W RMS: Long-term maximum power refer to IEC 60268
30W RMS: 100H continuous testing at rated power refers to IEC 60268

Stage2 65C

Dimension

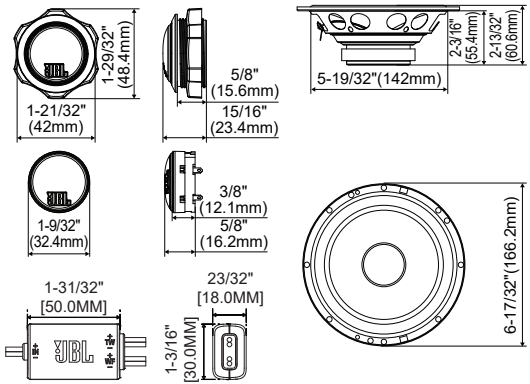

Connection

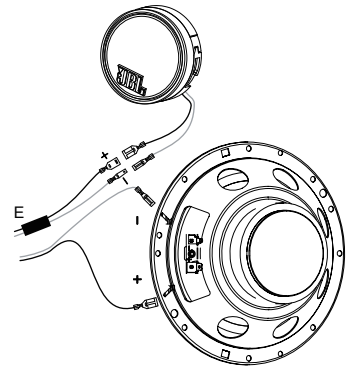

Installation

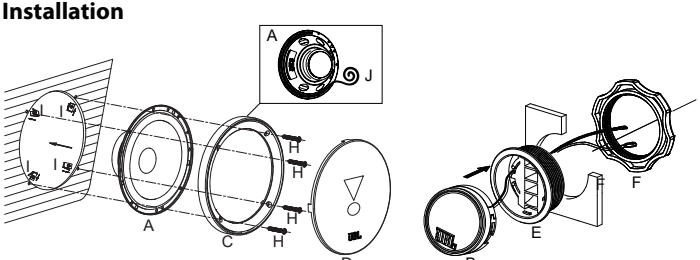

Specifications

- Speaker: 6-1/2" (165mm) Two-Way Component Car Speaker with Grille
- Power Handling: *90W RMS, 720W peak
- Sensitivity (@2.83V): 90dB
- Frequency Response: 60Hz-20kHz
- Nominal Impedance: 4ohm

Thiele-Small Parameters

- BL (Tm): 3.645
- DCR (Ohms): 3.19
- Mms (g): 11.26
- Sd (cm^2): 132.73
- Cms (um/N):376
- Vas (L): 9.373
- Fs (Hz): 77.4
- Qes: 1.314
- Qms: 8.897
- Qts: 1.145
- Crossover Point: 6400Hz

What's in the Box

*90W RMS: Long-term maximum power refer to IEC 60268
45W RMS: 100H continuous testing at rated power refers to IEC 60268

Stage2 65CF

Dimension

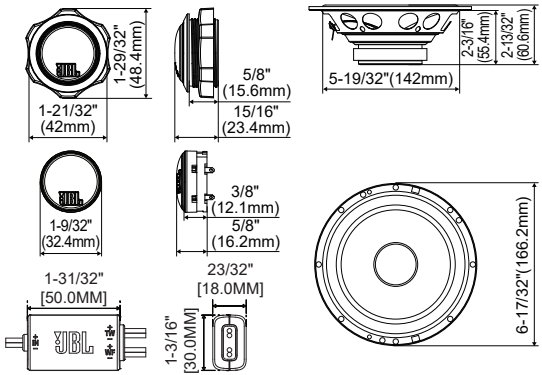

Connection

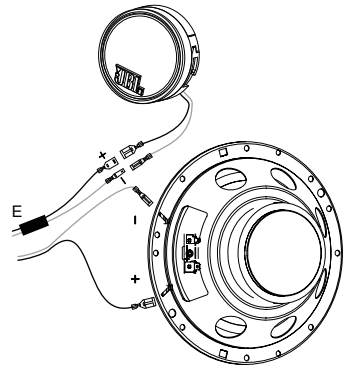

Installation

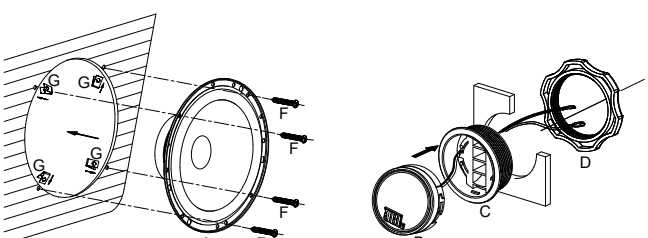

What's in the Box

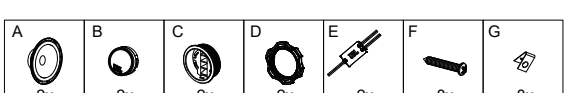

Specifications

- Speaker: 6-1/2" (165mm) Two-Way Component Car Speaker without Grille
- Power Handling: *90W RMS, 720W peak
- Sensitivity (@2.83V): 90dB
- Frequency Response: 60Hz-20kHz
- Nominal Impedance: 4ohm

Thiele-Small Parameters

- BL (Tm): 3.645
- DCR (Ohms): 3.19
- Mms (g): 11.26
- Sd (cm^2): 132.73
- Cms (um/N):376
- Vas (L): 9.373
- Fs (Hz): 77.4
- Qes: 1.314
- Qms: 8.897
- Qts: 1.145
- Crossover Point: 6400Hz

*90W RMS: Long-term maximum power refer to IEC 60268
45W RMS: 100H continuous testing at rated power refers to IEC 60268

Stage2 65M

Dimension

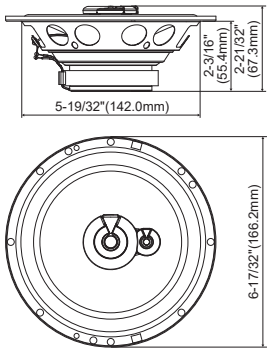

Connection

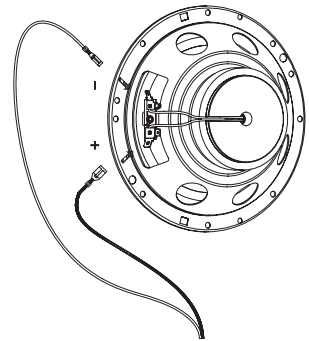

Installation

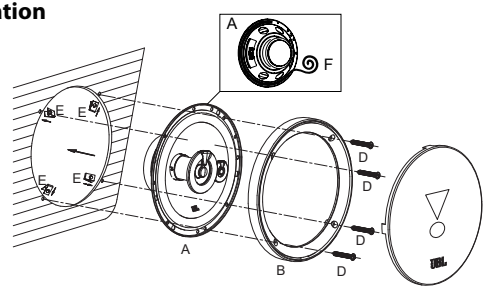

What's in the Box

A	B	C	D	E	F
2x	2x	2x	8x	8x	2x

Specifications

- Speaker: 6-1/2" (165mm) Three-Way Car Speaker with Grille
- Power Handling: *60W RMS, 480W peak
- Sensitivity (@2.83V): 90dB
- Frequency Response: 55Hz-20kHz
- Nominal Impedance: 4ohm

Thiele-Small Parameters

- BL (Tm): 3.279
- DCR (Ohms): 3.2
- Mms (g): 10.281
- Sd (cm^2): 132.73
- Cms (um/N):373
- Vas (L): 9.309
- Fs (Hz): 81.2
- Qes: 1.559
- Qms: 7.538
- Qts: 1.292
- Crossover Point: 5500Hz

*60W RMS: Long-term maximum power refer to IEC 60268
30W RMS: 100H continuous testing at rated power refers to IEC 60268

Stage2 45F

Dimension

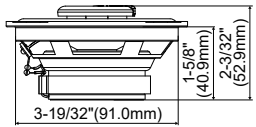

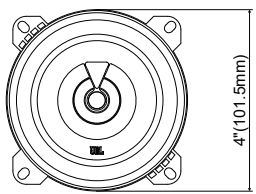

Installation

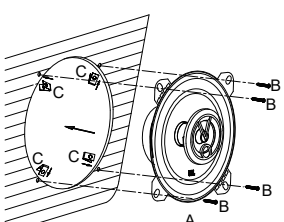

What's in the Box

A	B	C
2x	8x	8x

Connection

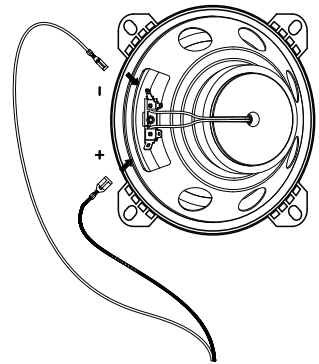

Specifications

- Speaker: 4" (100mm) Coaxial Car Speaker without Grille
- Power Handling: *40W RMS, 320W peak
- Sensitivity (@2.83V): 88dB
- Frequency Response: 80Hz-20kHz
- Nominal Impedance: 4ohm

Thiele-Small Parameters

- BL (Tm): 2.522
- DCR (Ohms): 3.23
- Mms (g): 4.039
- Sd (cm^2): 50.27
- Cms (um/N): 469
- Vas (L): 1.678
- Fs (Hz): 115.6
- Qes: 1.489
- Qms: 7.422
- Qts: 1.24
- Crossover Point: 6600Hz

*40W RMS: Long-term maximum power refer to IEC 60268
20W RMS: 100H continuous testing at rated power refers to IEC 60268

Stage2 55F

Dimension

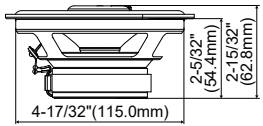

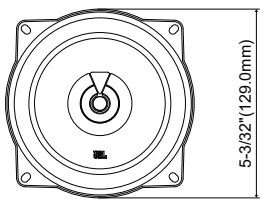

Connection

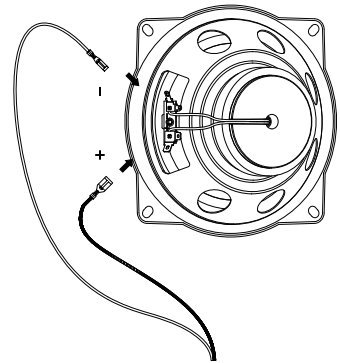

Installation

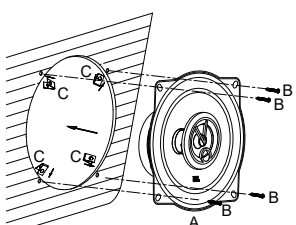

What's in the Box

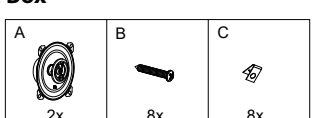

Specifications

- Speaker: 5.25" (130mm) Coaxial Car Speaker without Grille
- Power Handling: *50W RMS, 400W peak
- Sensitivity (@2.83V): 89dB
- Frequency Response: 55Hz-20kHz
- Nominal Impedance: 4ohm

Thiele-Small Parameters

- BL (Tm): 2.928
- DCR (Ohms): 3.2
- Mms (g): 6.406
- Sd (cm2): 84.95
- Cms (um/N): 529
- Vas (L): 5.399
- Fs (Hz): 86.5
- Qes: 1.299
- Qms: 9.485
- Qts: 1.142
- Crossover Point: 6500Hz

*50W RMS: Long-term maximum power refer to IEC 60268
25W RMS: 100H continuous testing at rated power refers to IEC 60268

Stage2 965M

Dimension

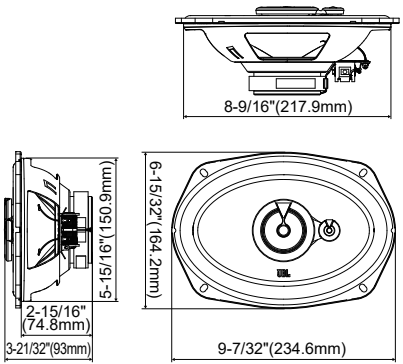

Connection

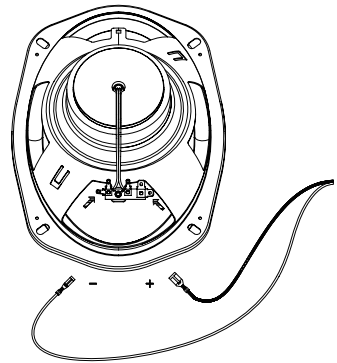

Installation

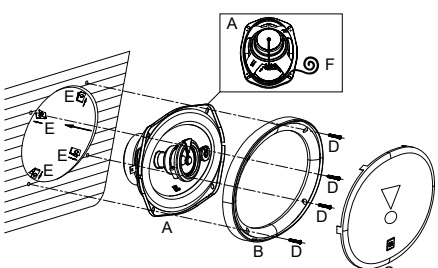

What's in the Box

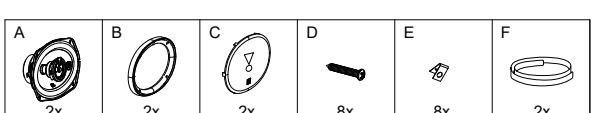

Specifications

- Speaker: 6x9" (152x230mm) Three-Way Car Speaker with Grille
- Power Handling: *70W RMS, 560W peak
- Sensitivity (@2.83V): 92dB
- Frequency Response: 45Hz-20kHz
- Nominal Impedance: 4ohm

Thiele-Small Parameters

- BL (Tm): 4.582
- DCR (Ohms): 3.24
- Mms (g): 20.9
- Sd (cm^2): 239
- Cms (um/N): 347
- Vas (L): 28.08
- Fs (Hz): 59.1
- Qes: 1.198
- Qms: 11.049
- Qts: 1.081
- Crossover Point: 4300Hz

*70W RMS: Long-term maximum power refer to IEC 60268
35W RMS: 100H continuous testing at rated power refers to IEC 60268