LEGO TECHNIC

42164



1

LEGO® Builder

LEGO.com/sustainable-packaging



FR
DONNEZ OU RECYCLEZ
ASSOCIATION OU MAGASIN OU DÉCHÈTERIE
Adresses sur quefairedemesdechets.fr



LEGO® Builder

BUILDER

Download on the App Store | GET IT ON Google Play | 腾讯应用宝 安卓应用商店

Apple and the Apple logo are trademarks of Apple Inc., registered in the U.S. and other countries and regions. App Store is a service mark of Apple Inc. Google Play and the Google Play logo are trademarks of Google LLC. Tencent and the Tencent logo are trademarks of Tencent Inc.

LEGO.com/devicecheck

EN Ask parents' permission before going online **| DE** Eltern um Erlaubnis bitten, bevor du online gehst **| FR** Demande l'autorisation d'un parent avant d'aller en ligne **| IT** Chiedi il permesso ai tuoi genitori prima di andare online **| ES** Pídeles permiso a tus papás antes de conectarte a Internet **| PT** Pede autorização aos pais antes de acederes online **| ZH** 上网前应先征得父母的同意 **| PL** Poproś rodziców o zgodę, zanim wejdziesz do Internetu **| CS** Než půjdeš na internet, požádej rodiče o svolení **| SK** Skôr než pôjdeš na internet, vypýtaj si povolenie od rodičov **| HU** Kérj szülői engedélyt, mielőtt online csatlakoznál! **| RO** Cere permisiunea părinților înainte de a te conecta online **| BG** Поискайте разрешение от родител, преди да влезете онлайн **| LV** Pirms došanās tiešsaistē palūdz atļauju vecākiem **| ET** Enne Interneti kasutamist küsi vanematelt luba **| LT** Prieš prisijungdami prie interneto, atsiklauskite tėvų

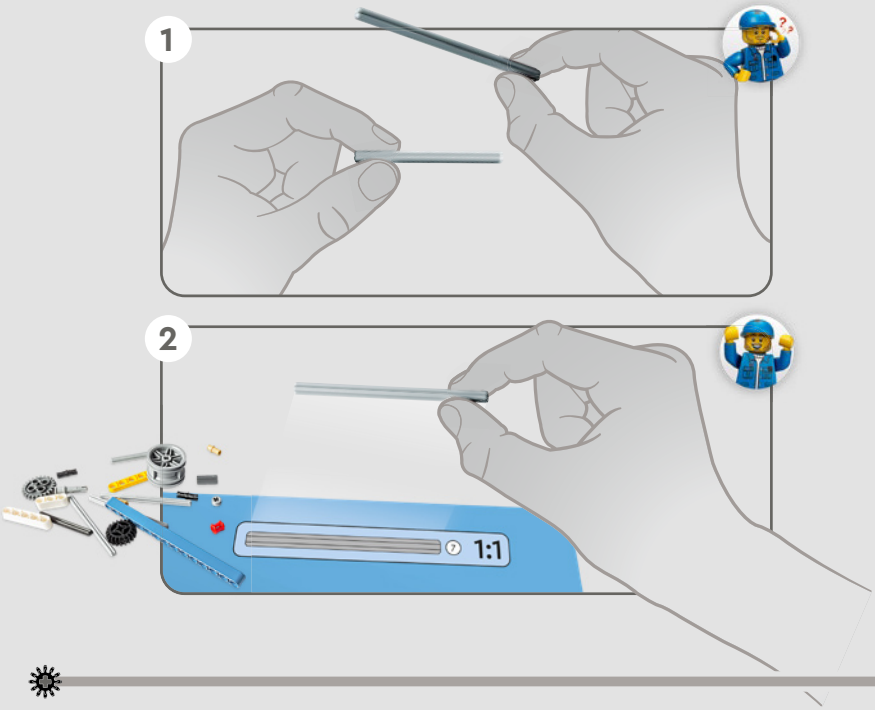
1
2
1:1



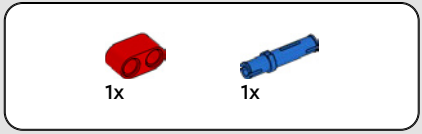

1

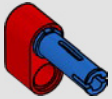

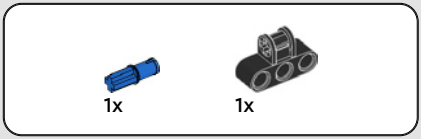

2

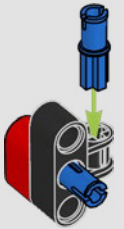

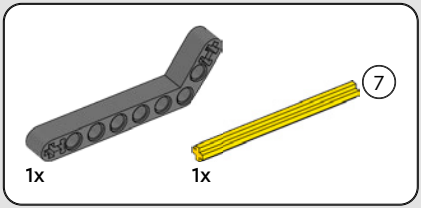

3

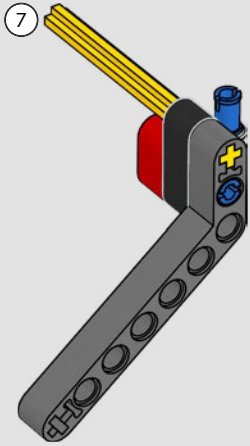



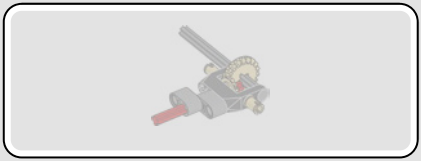

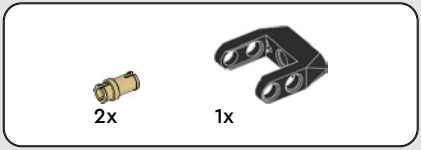

4

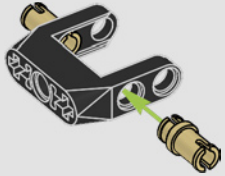

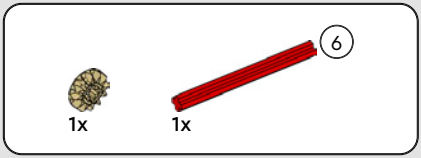

5

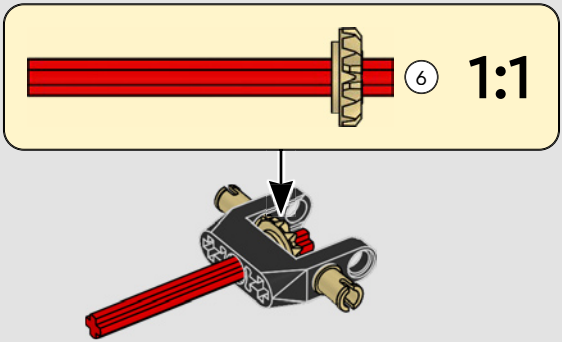

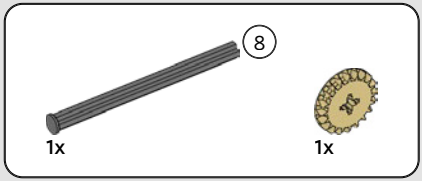

6

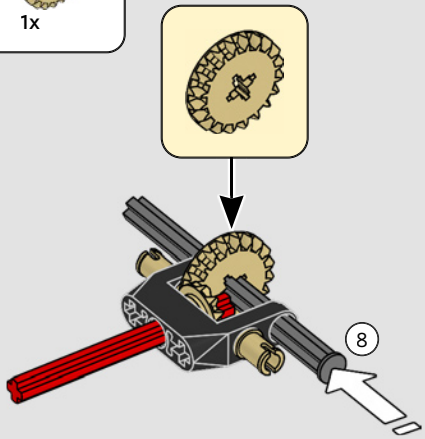

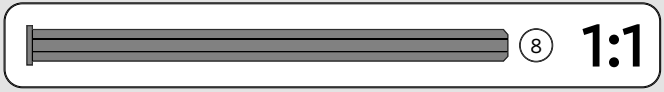



2x

7

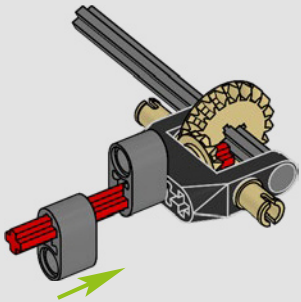

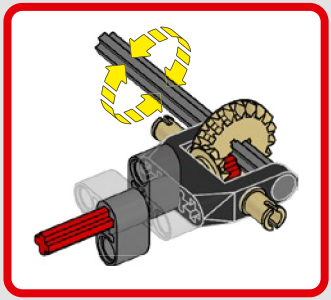

8

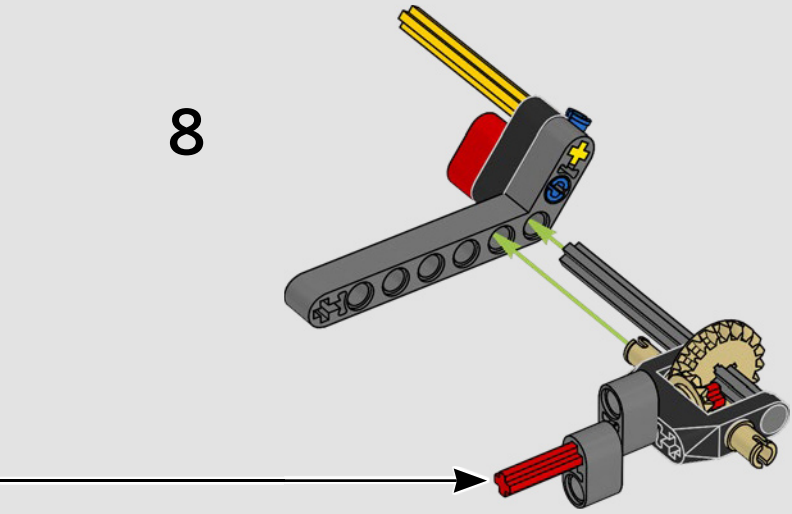

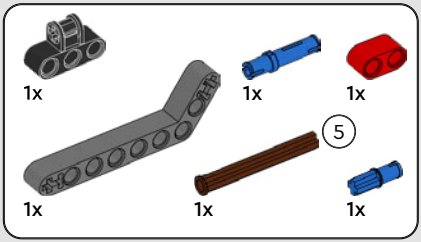

9

1

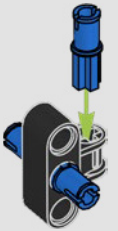

2

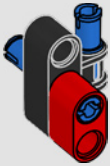



3

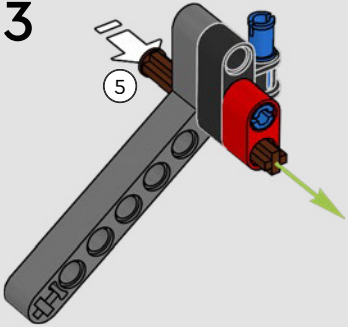

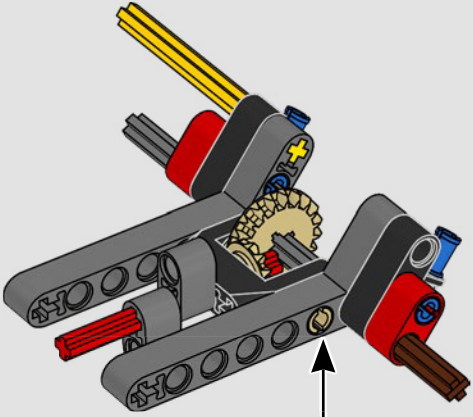

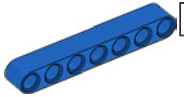

1x

10

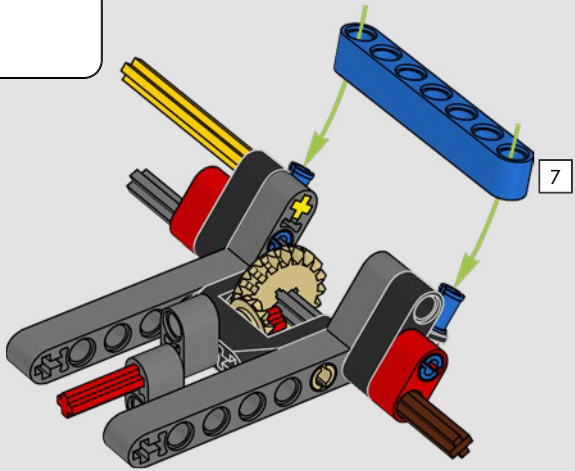



1:1


2x


2x

11

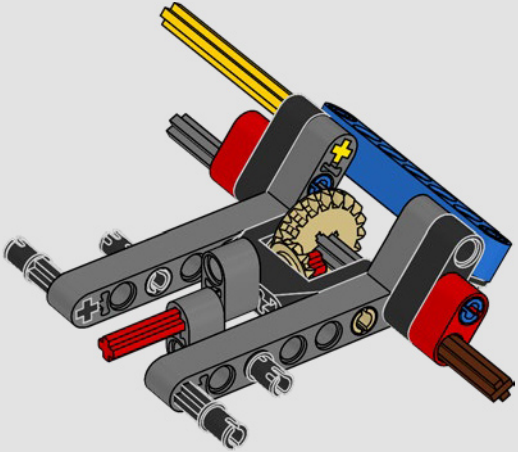



12

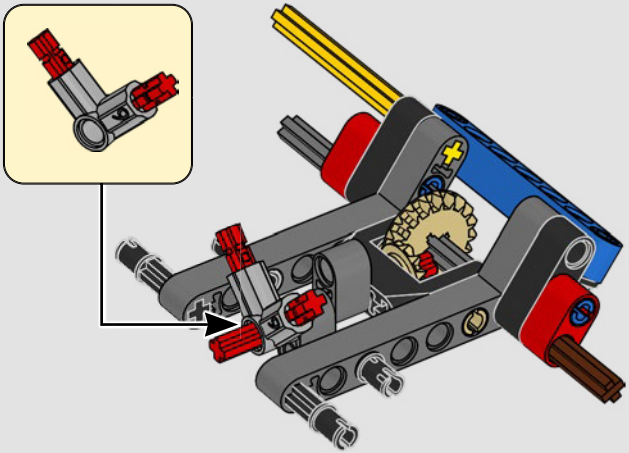



1x

13

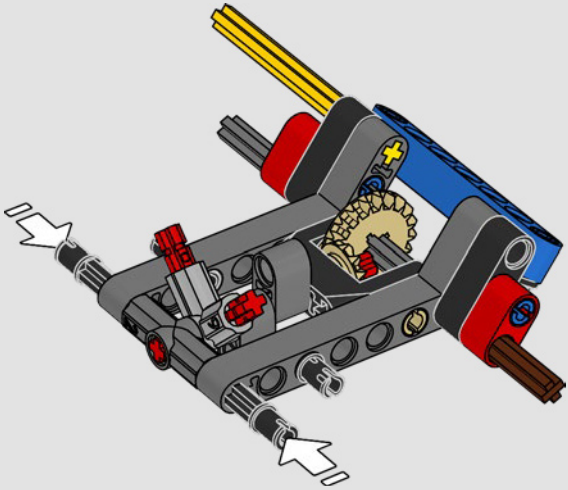

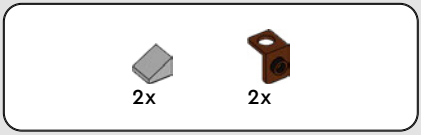

14

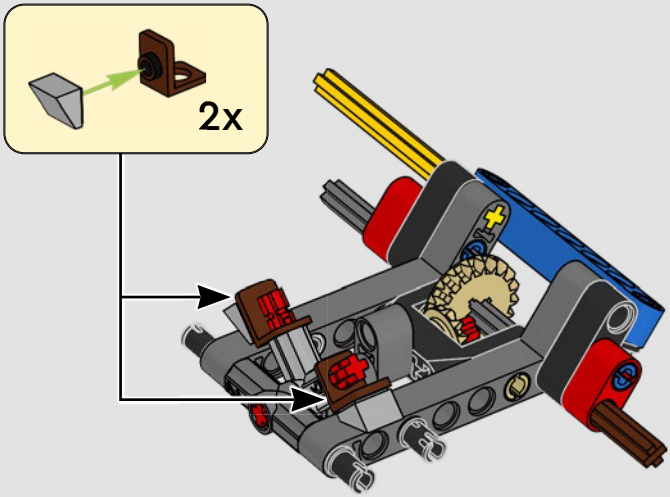

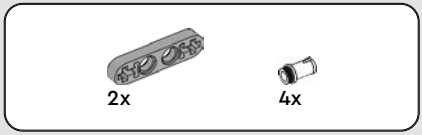

15

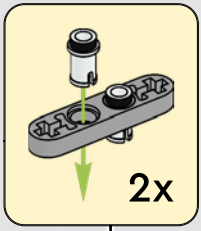

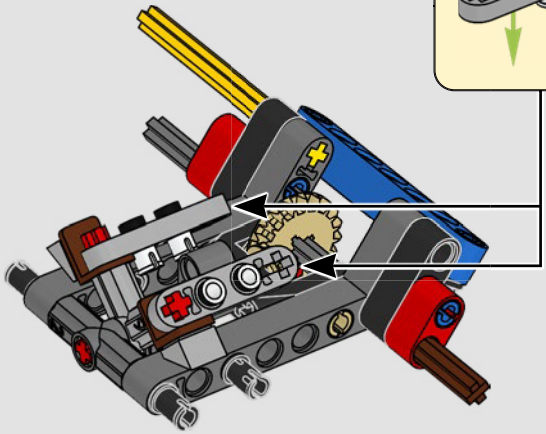

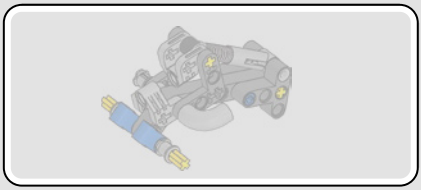

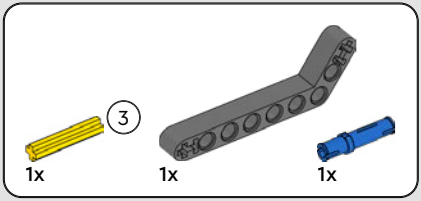

16

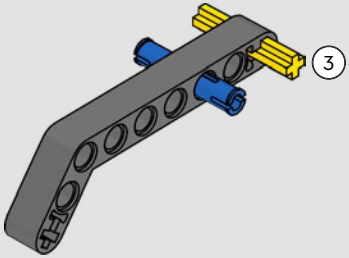

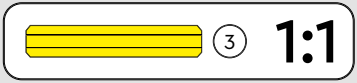



2x

17

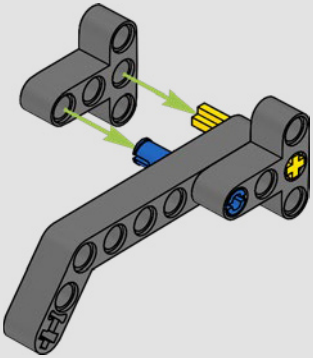



1x

18

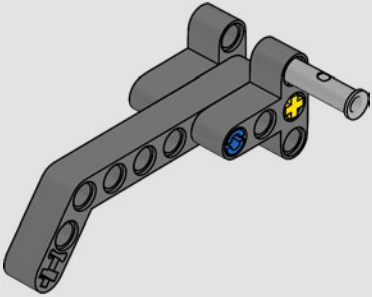

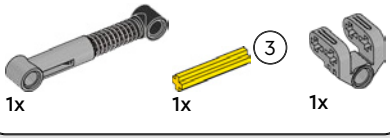

19

1

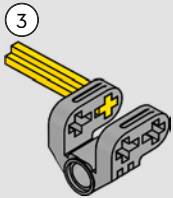

2

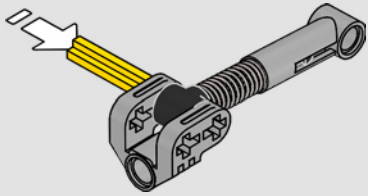

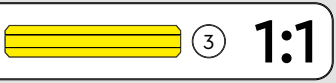

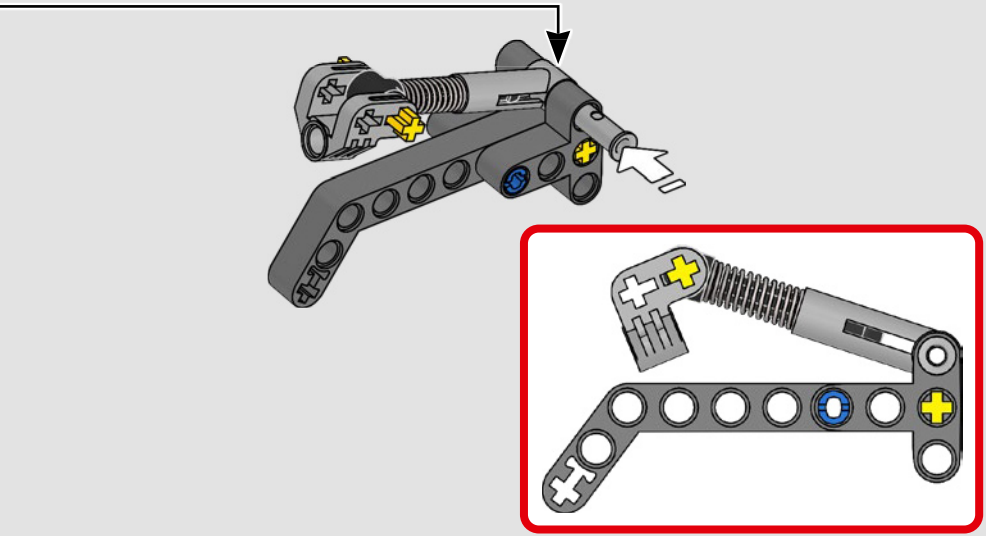

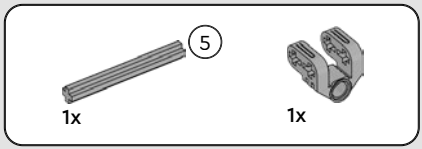

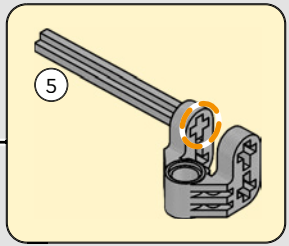

20

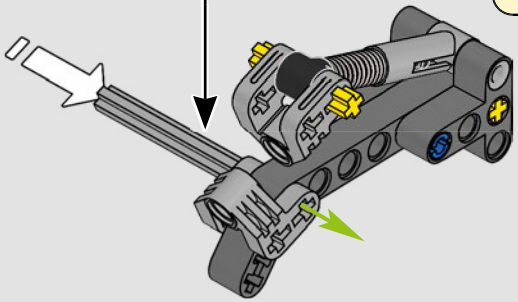

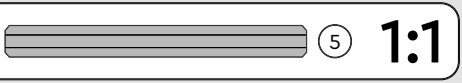

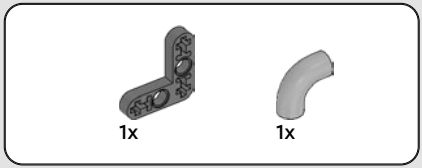

21

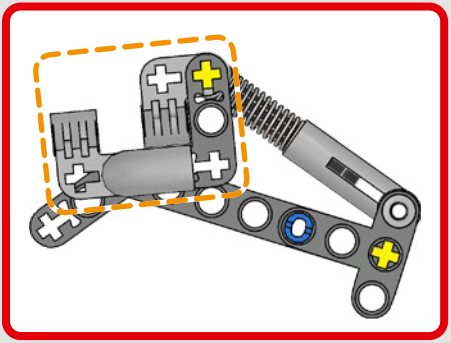

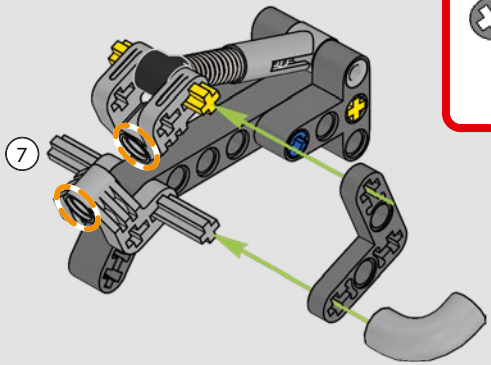

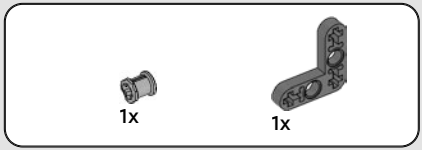

22

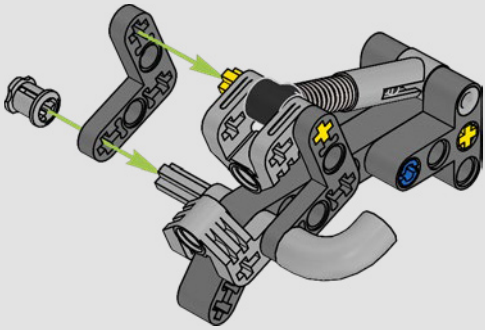

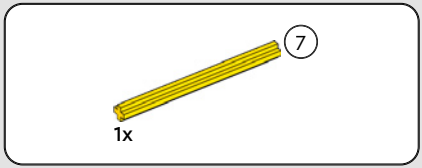

23

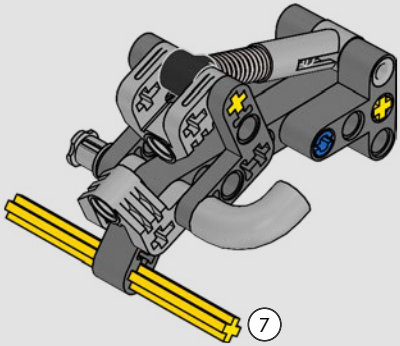

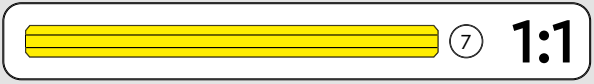


2x


2x

24

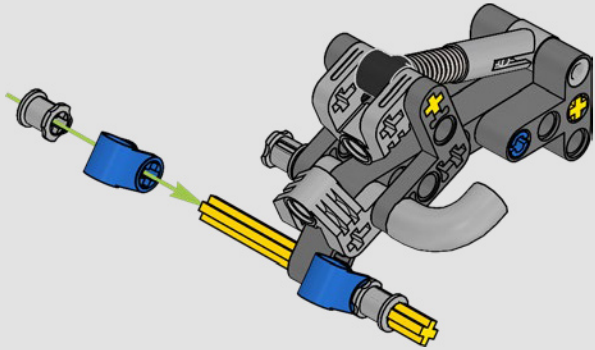

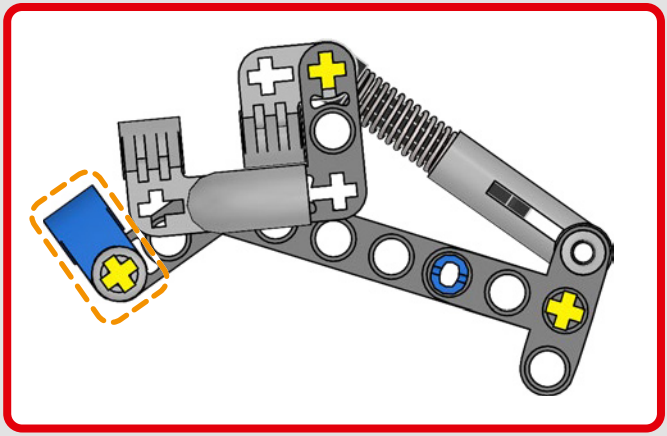

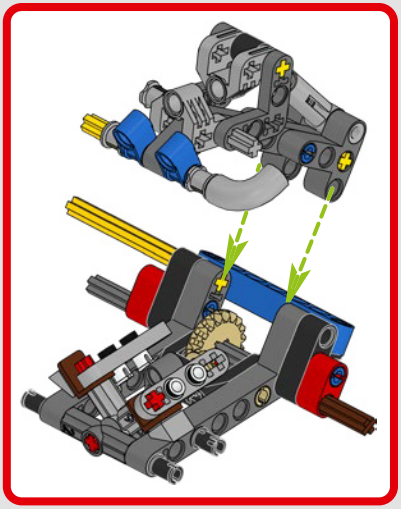

25

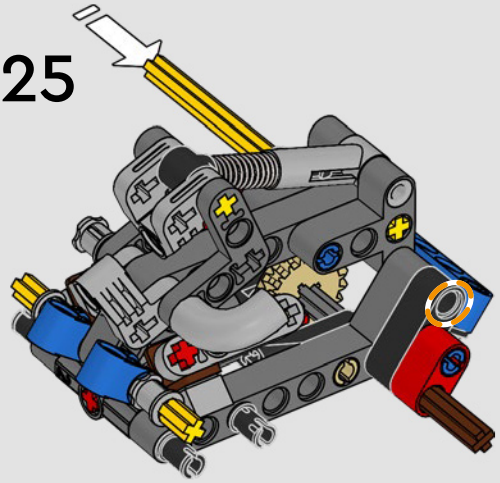

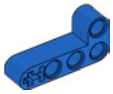

2x

26

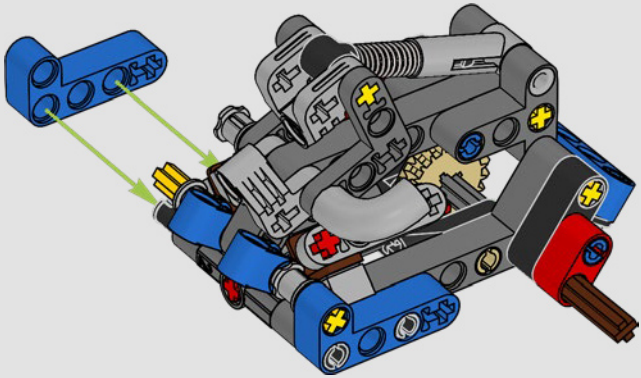

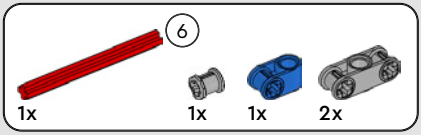

27

1



2

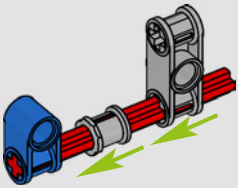



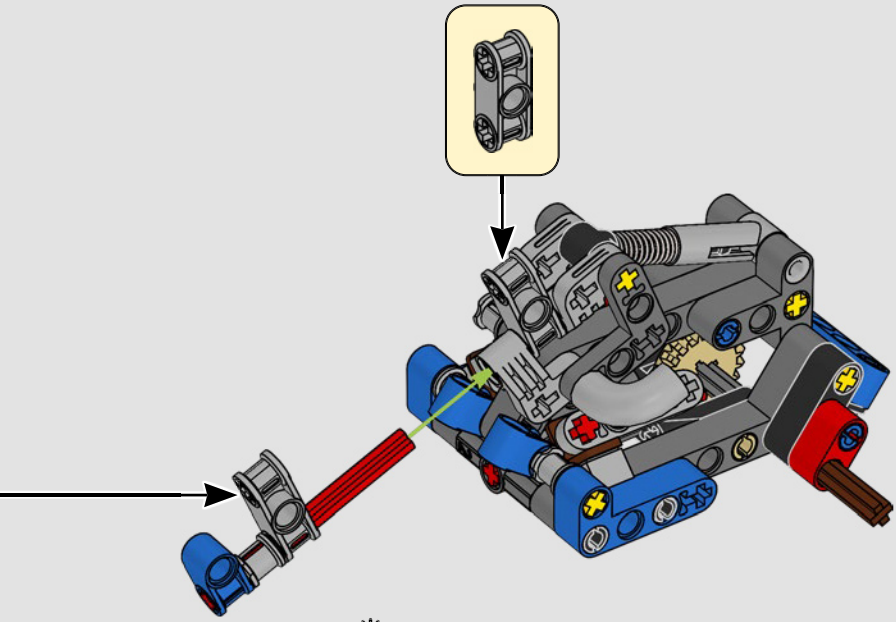

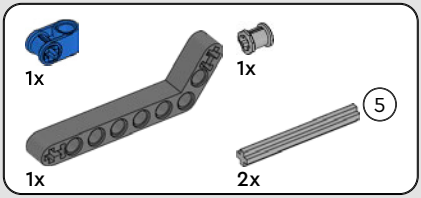

28

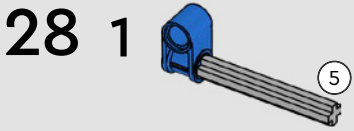

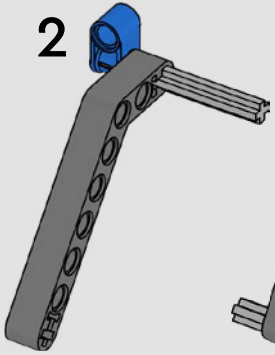

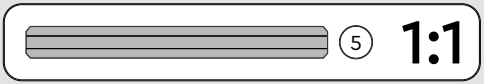

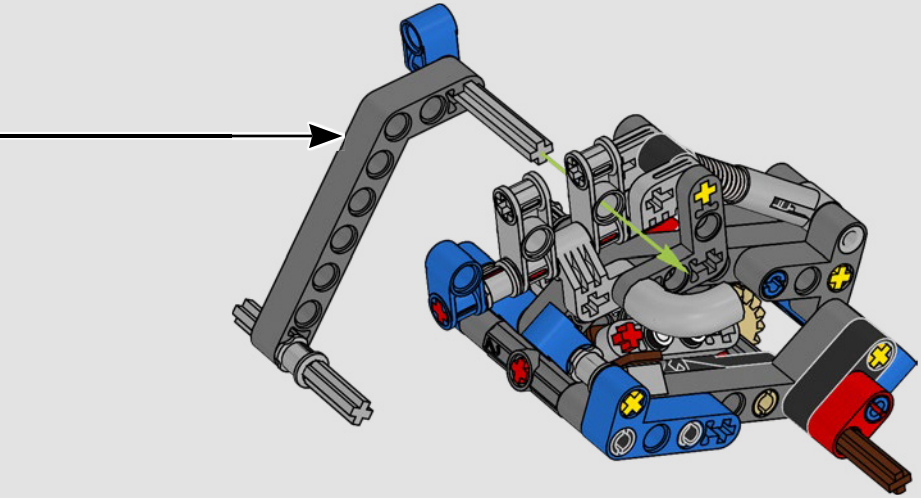

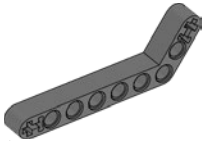

1x

29

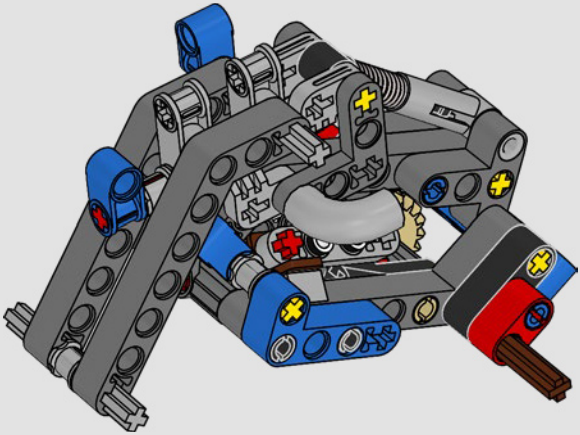



1x

30

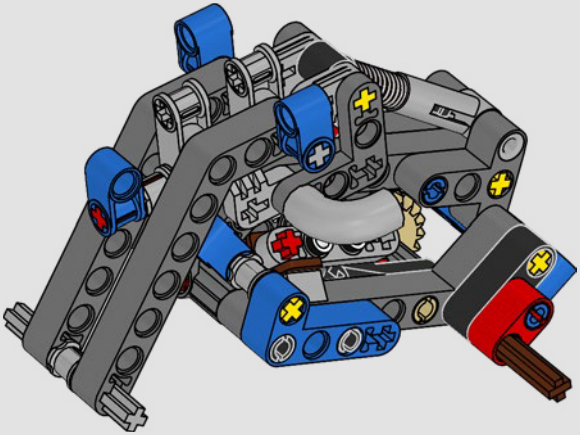

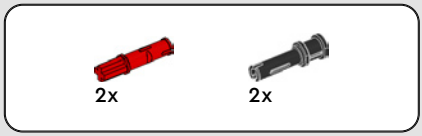

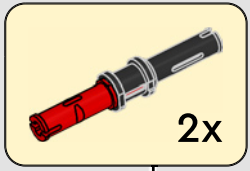

31

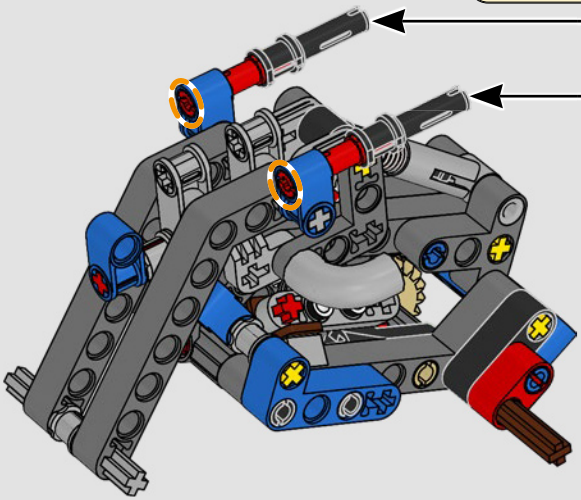

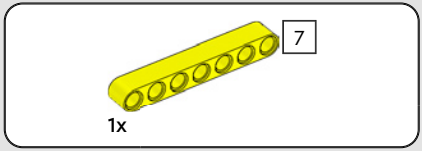

32

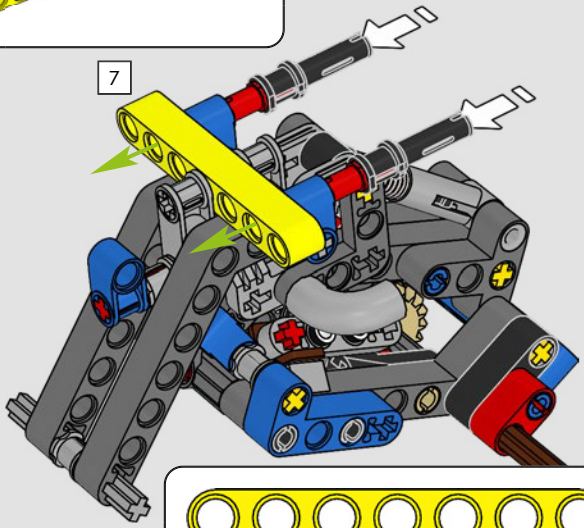

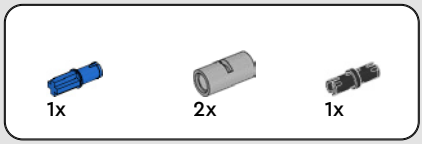

33

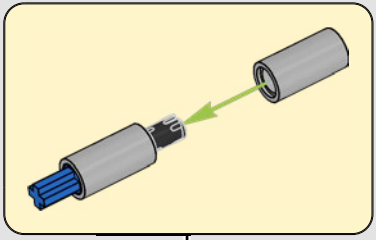

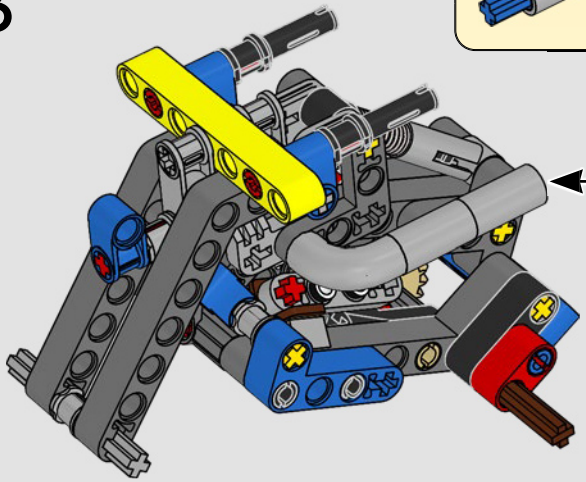

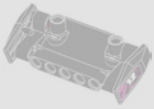



34

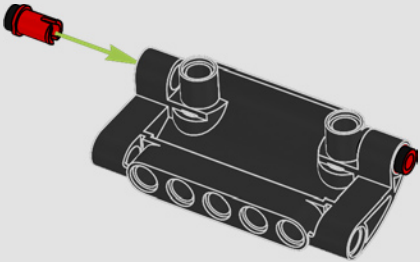

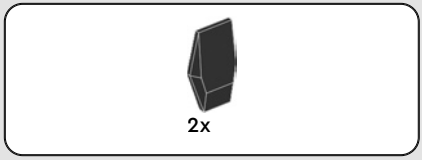

35

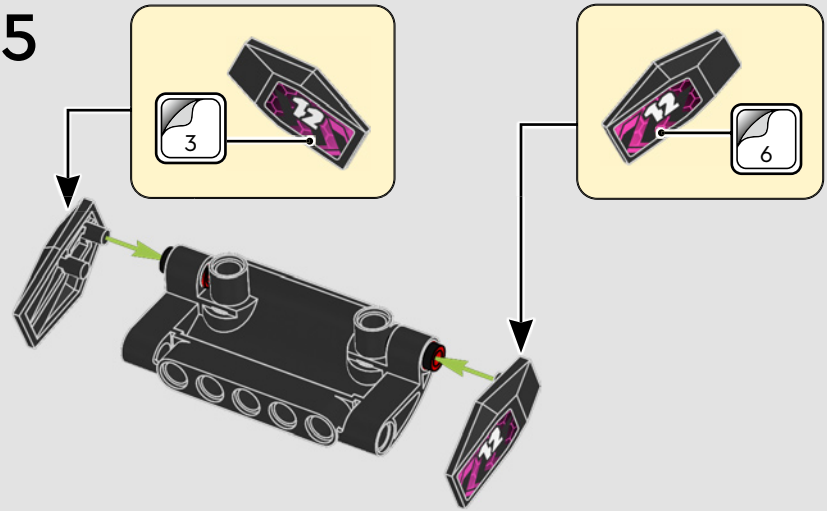

36

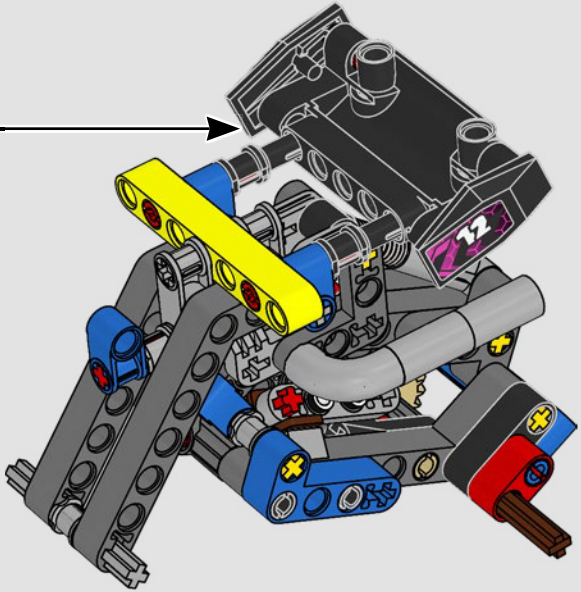

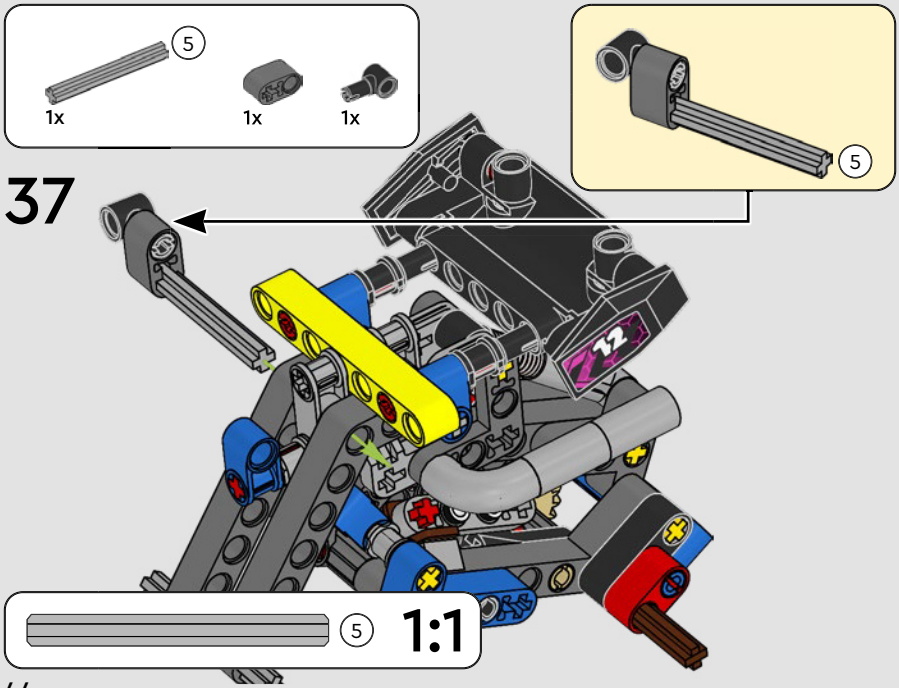
5
1x
1x
1x
5
37
5
1:1

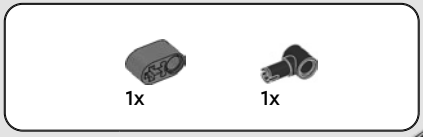

38

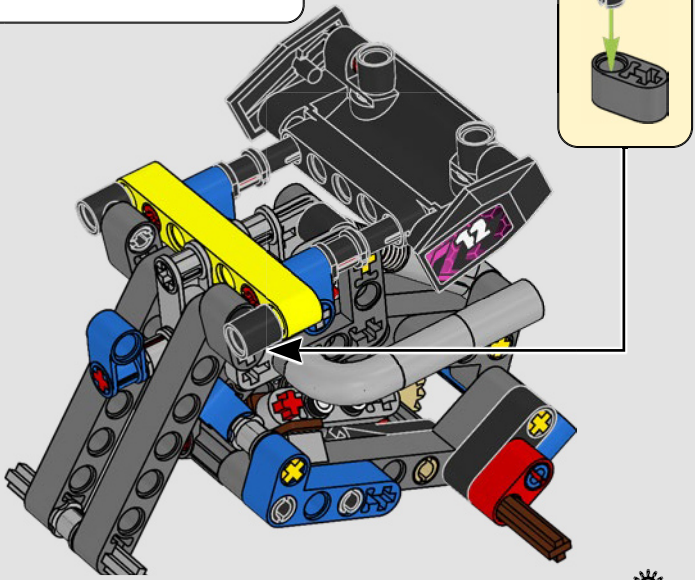

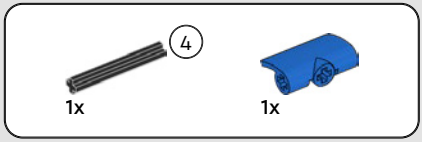

39

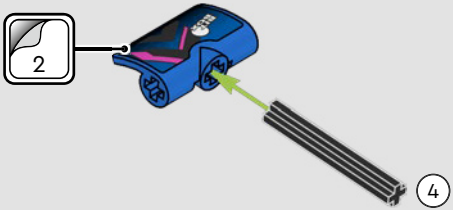

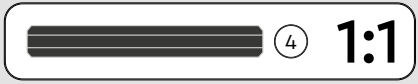

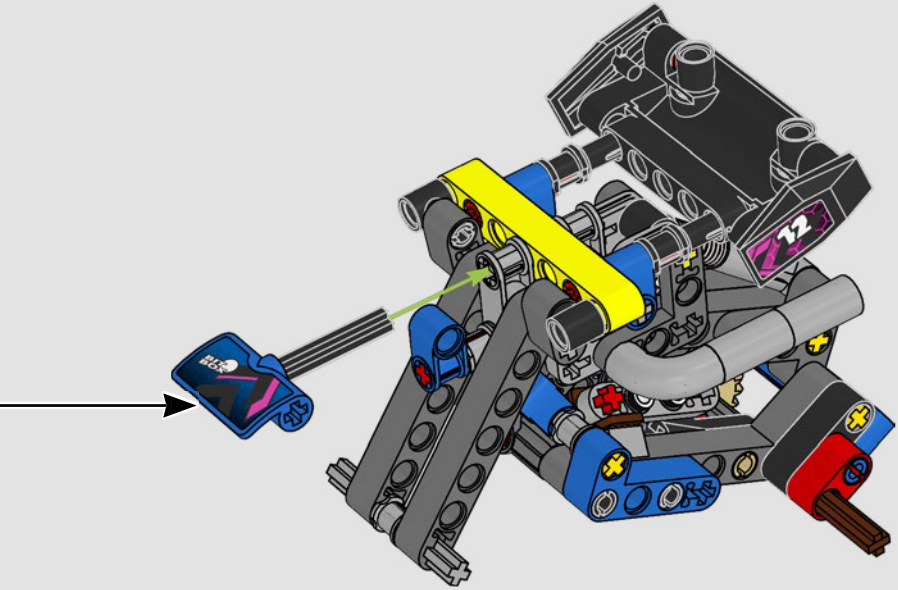

SHARE YOUR FEEDBACK



Scan this QR code or go to **LEGO.COM/PRODUCTFEEDBACK** and give us your short feedback about this LEGO® set.

Terms and Conditions apply*

EN: SHARE YOUR FEEDBACK. Terms and Conditions apply* **DE: Teile dein FEEDBACK.** Es gelten die Teilnahmebedingungen* **FR: Partagez vos COMMENTAIRES.** Des conditions s'appliquent* **IT: Condividi il tuo FEEDBACK.** Termini e condizioni sono applicabili* **ES: Comparte tu OPINIÓN.** Aplican términos y condiciones* **PT: Partilha o teu FEEDBACK.** Aplicam-se termos e condições* **ZH:** 请分享您的反馈. 条款和条件适用* **PL: Podziel się swoją OPINIĄ.** Obowiązują warunki korzystania* **CS: Podělte se o ZPĚTNOU VAZBU.** Platí všeobecné smluvní podmínky* **SK: Podeľ sa o svoj NÁZOR.** Platia všeobecné zmluvné podmienky* **HU: Oszd meg a VÉLEMÉNYED.** Felhasználási feltételek érvényesek* **RO: Trimite FEEDBACK.** Se aplică termeni și condiții* **BG: Споделете вашите ОТЗИВИ.** Има определени правила и условия* **LV: Sniedziet ATSAUKSMES.** Ir spēkā noteikumi un nosacījumi.* **ET: Jaga oma TAGASISIDET.** Kehtivad tingimused* **LT: Palikite ATSILIEPIMĄ.** Taikomos sąlygos*

**LEGO.com/productfeedback-terms*

LEGO and the LEGO logo are trademarks of the LEGO Group. ©2024 The LEGO Group.

6495257