LEGO SPEED CHAMPIONS

77249



LEGO® Builder

LEGO.com/sustainable-packaging



FR DONNEZ OU RECYCLEZ
ASSOCIATION OU MAGASIN OU DÉCHÈTERIE
Adresses sur quefairedemesdechets.fr



BUILDER

Download on the App Store | GET IT ON Google Play | 腾讯应用宝 安卓应用商店

Apple and the Apple logo are trademarks of Apple Inc., registered in the U.S. and other countries and regions. App Store is a service mark of Apple Inc. Google Play and the Google Play logo are trademarks of Google LLC. Tencent and the Tencent logo are trademarks of Tencent Inc.

LEGO.com/devicecheck

LEGO® Builder

EN Ask parents' permission before going online I **DE** Eltern um Erlaubnis bitten, bevor du online gehst I **FR** Demande l'autorisation d'un parent avant d'aller en ligne I **IT** Chiedi il permesso ai tuoi genitori prima di andare online I **ES** Pídeles permiso a tus papás antes de conectarte a Internet I **PT** Pede autorização aos pais antes de acederes online I **ZH** 上网前应先征得父母的同意 I **PL** Poproś rodziców o zgodę, zanim wejdziesz do Internetu I **CS** Než půjdeš na internet, požádej rodiče o svolení I **SK** Skôr než pôjdeš na internet, vypýtaj si povolenie od rodičov I **HU** Kérj szülői engedélyt, mielőtt online csatlakoznál! I **RO** Cere permisiunea părinților înainte de a te conecta online I **BG** Поискайте разрешение от родител, преди да влезете онлайн I **LV** Pirms došanās tiešsaistē palūdz atļauju vecākiem I **ET** Enne Interneti kasutamist küsi vanematelt luba I **LT** Prieš prisijungdami prie interneto, atsiklauskite tėvų



LEGO Group Gründung: 1932 | Année de création du groupe LEGO : 1932 | The LEGO Group fondato: 1932 | Fundación de The LEGO Group: 1932 | Fundação do Grupo LEGO: 1932 | 乐高集团创立时间：1932 年 | Rok założenia Grupy LEGO: 1932 | Založení LEGO Group: 1932 | Založenie LEGO Group: 1932 | LEGO Csoport alapítása: 1932 | Anul constituirii LEGO Group: 1932 | Основаване на групата LEGO: 1932 г. | LEGO Group dibināta: 1932. gadā | The LEGO Group asutati: 1932. aastal | LEGO grupė įsteigta: 1932 m.

WILLIAMS RACING

F1® team founded: **1977**



F1® Team Gründung: 1977 | Année de création de l'équipe de F1® : 1977 | Scuderia di F1® fondata: 1977 | Fundación del equipo de F1®: 1977 | Fundação da equipa de F1®: 1977 | F1® 车队成立时间：1977 年 | Rok założenia zespołu F1®: 1977 | Založení týmu F1®: 1977 | Založenie tímu F1®: 1977 | F1®-es csapat alapítása: 1977 | Anul creării echipei de F1®: 1977 | Основаване на отбора F1®: 1977 г. | F1® komanda dibināta: 1977. gadā | F1® meeskond asutati: 1977 | F1® komanda įsteigta: 1977 m.

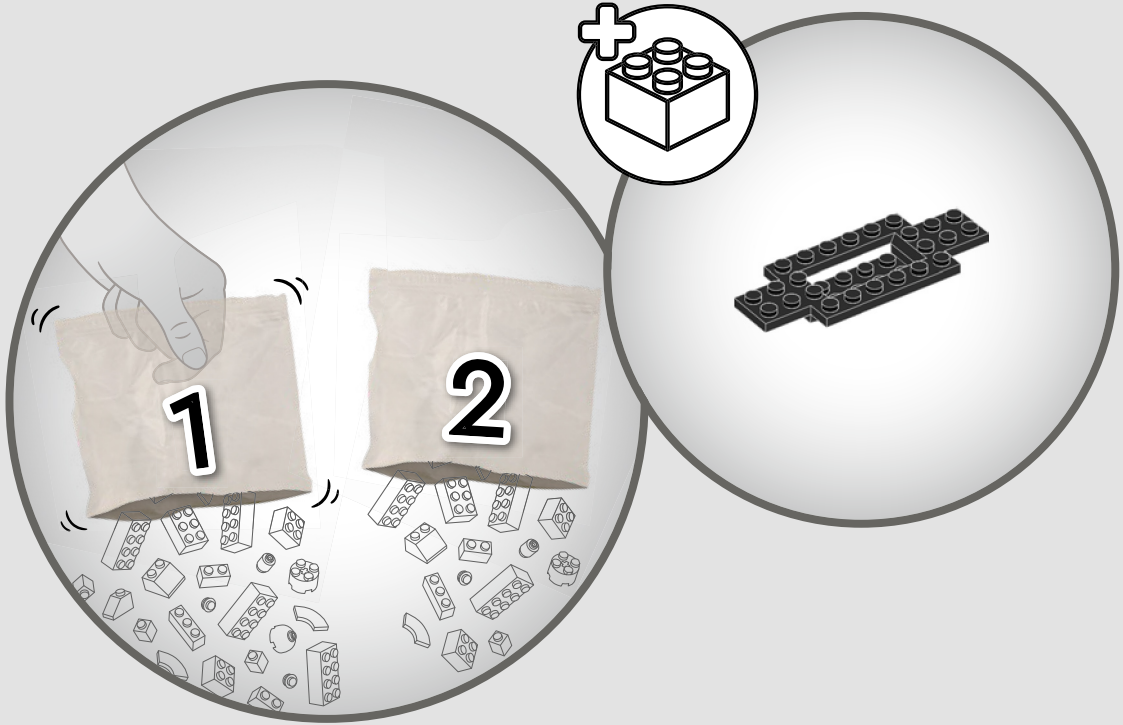
1
2

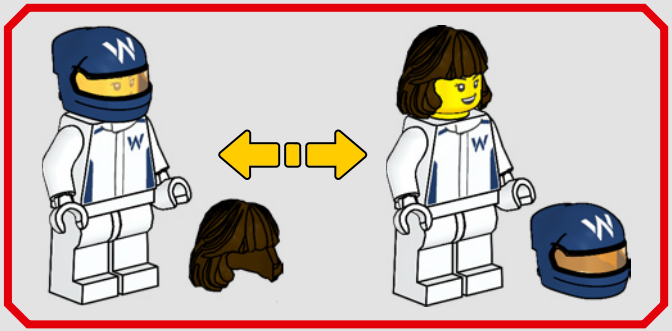

1

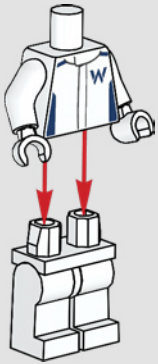

2

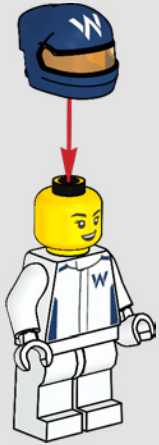

3

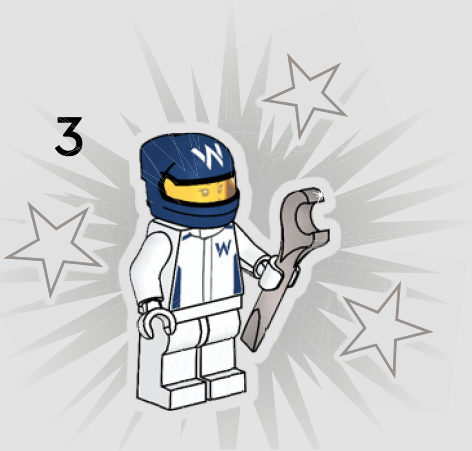

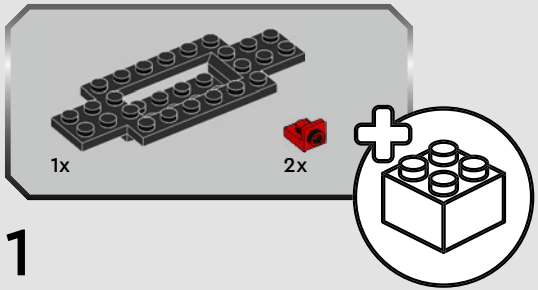

1

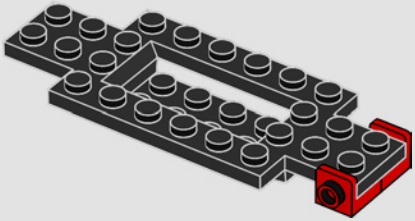

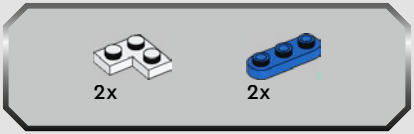

2

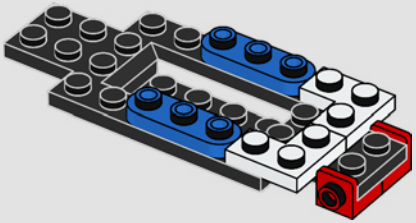

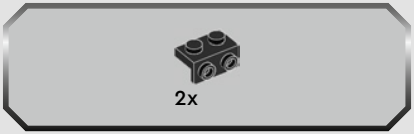

3

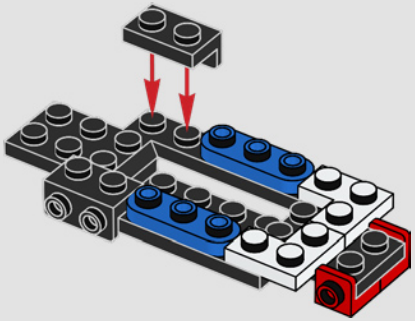



4



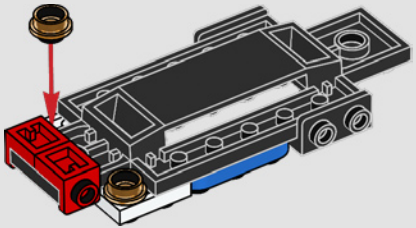

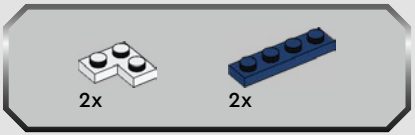

5

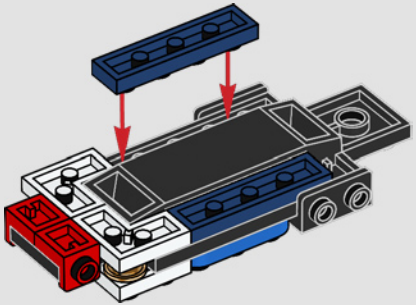



6

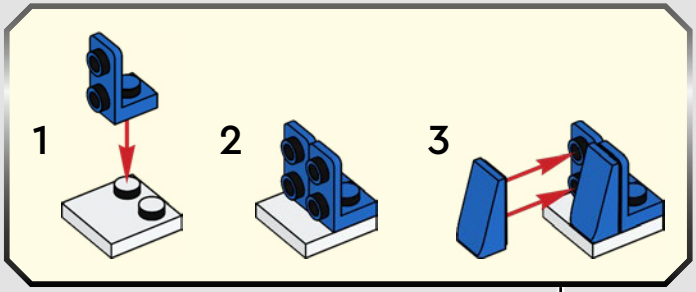

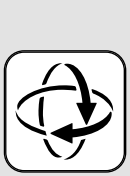

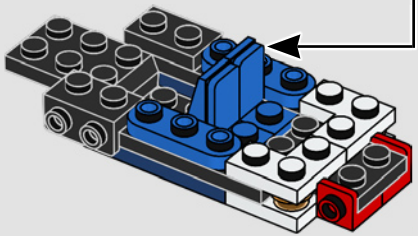

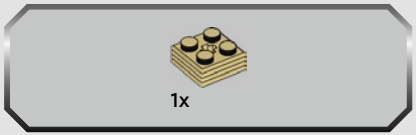

7

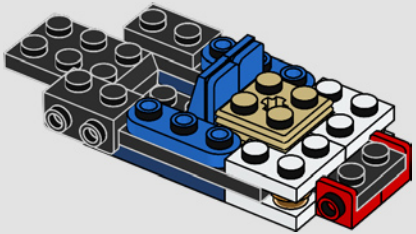

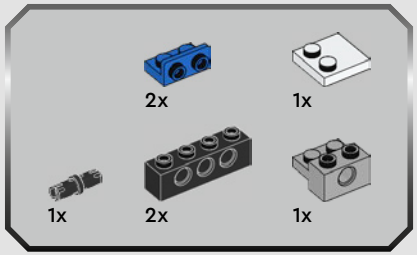

8

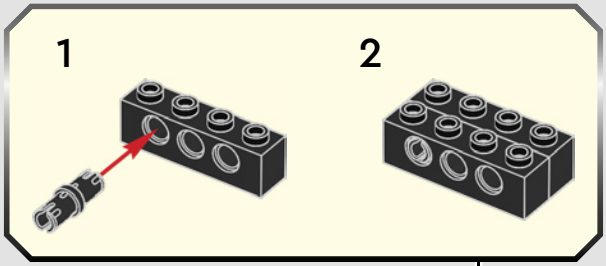

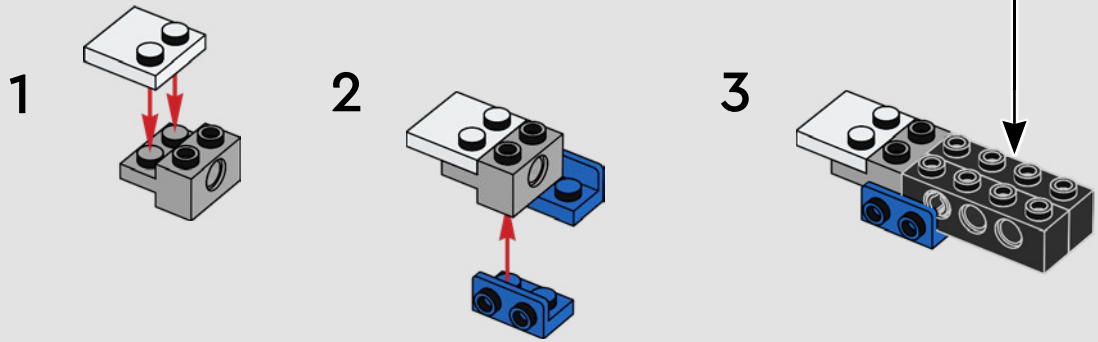

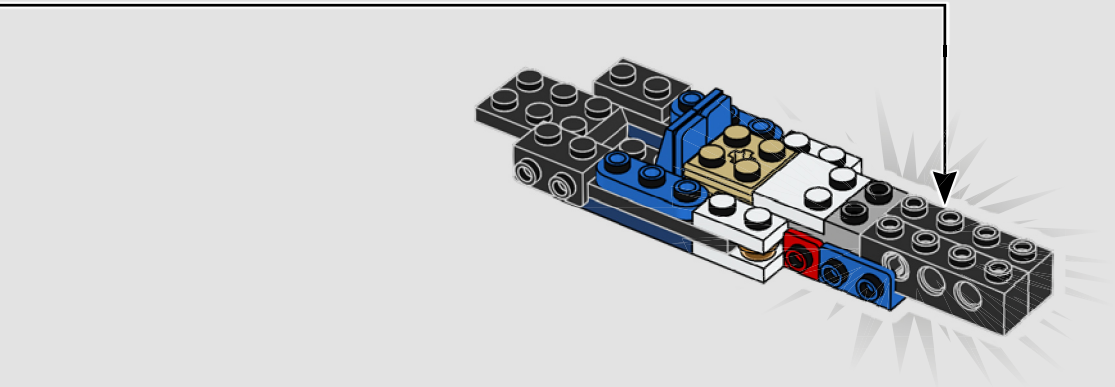

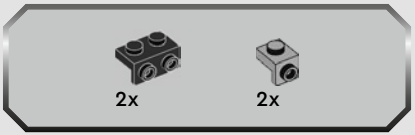

9

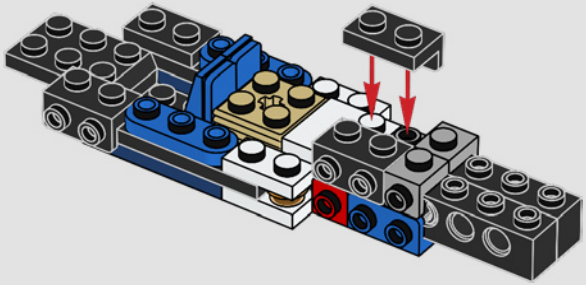

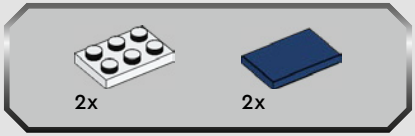

10

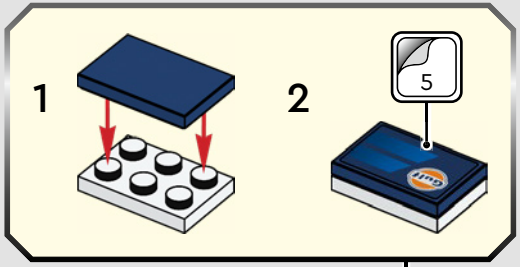

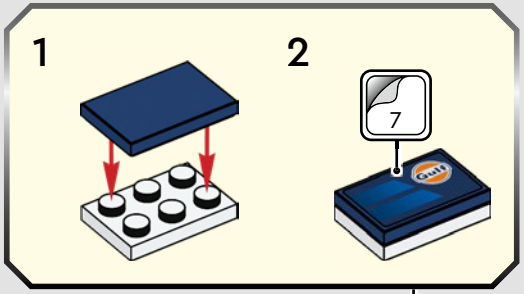

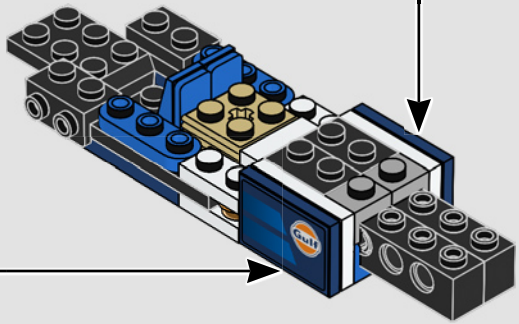



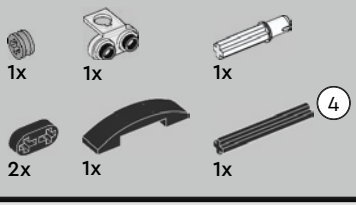

11

1

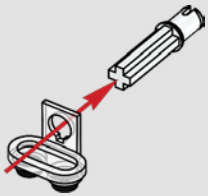

2



3



4

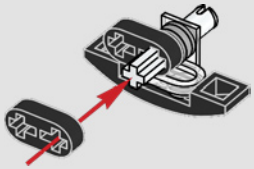



5

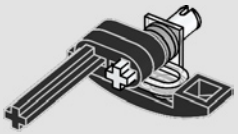

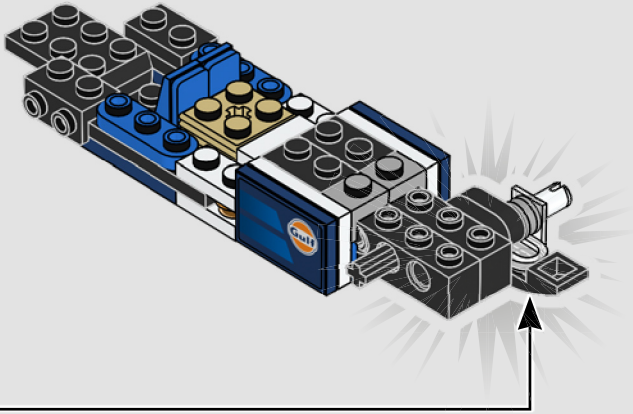

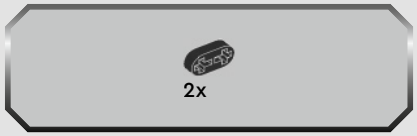

12

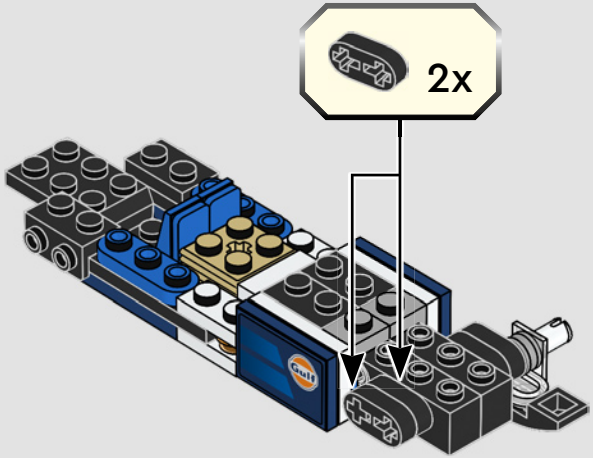

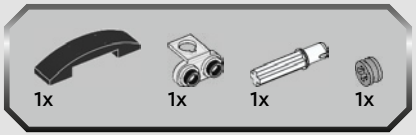

13

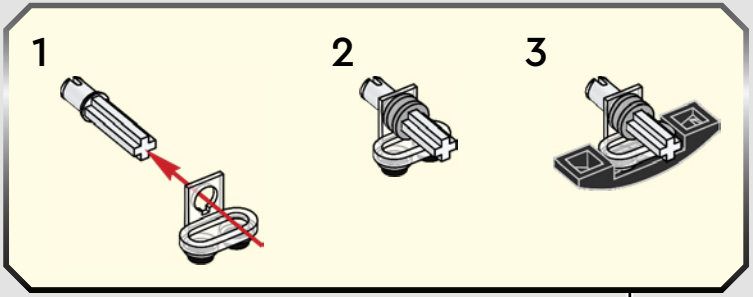

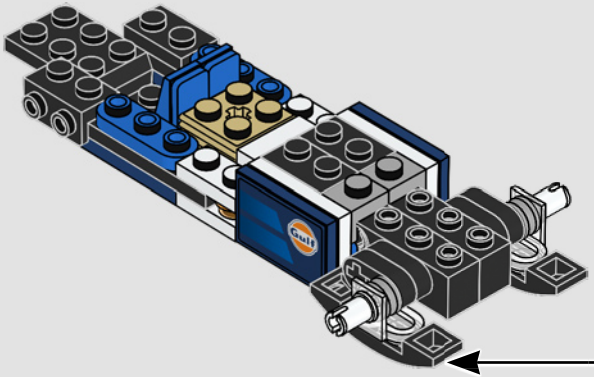

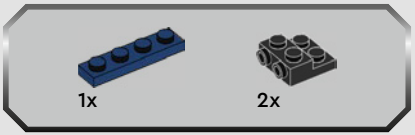

14

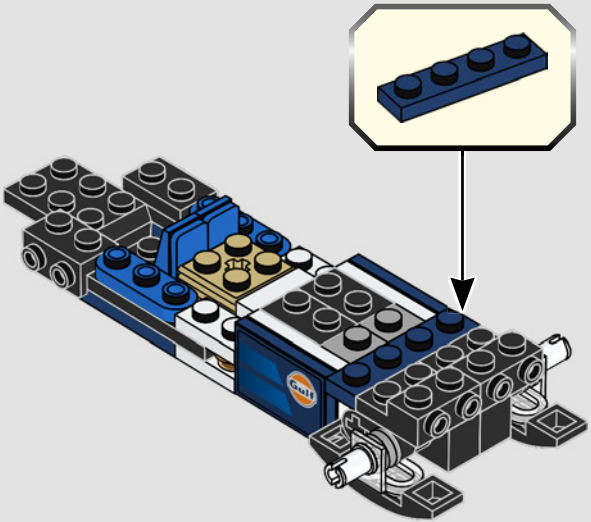

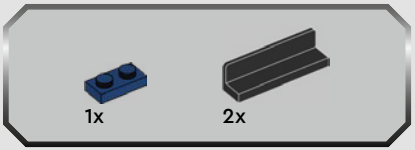

15

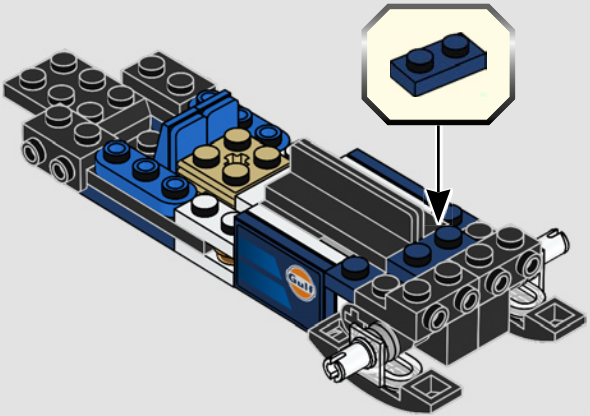

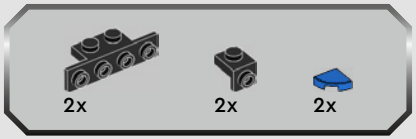

16

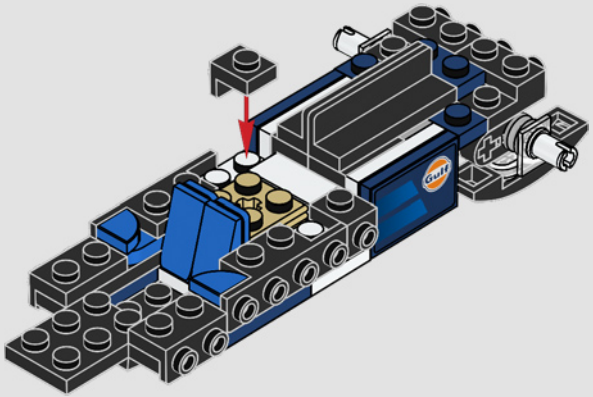

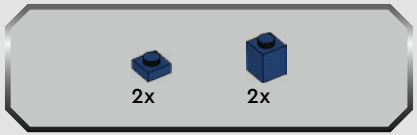

17

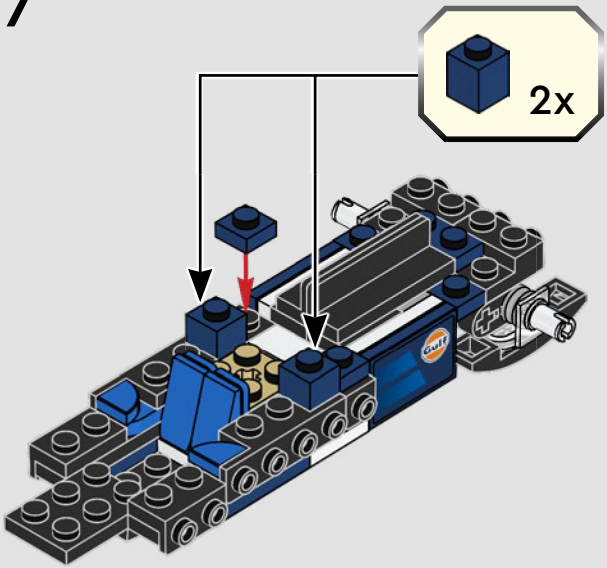

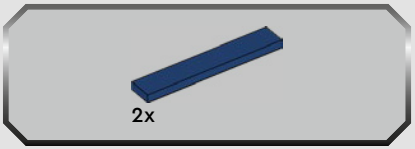

18

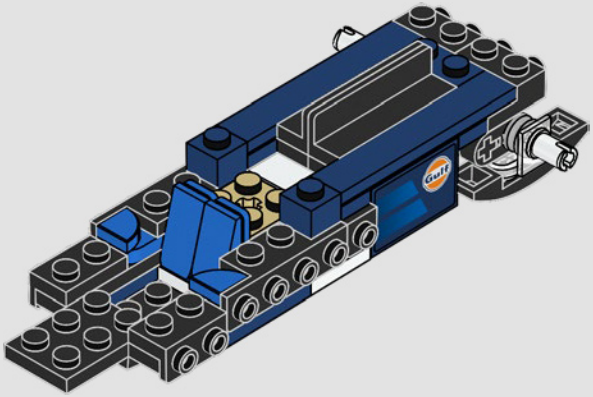



19

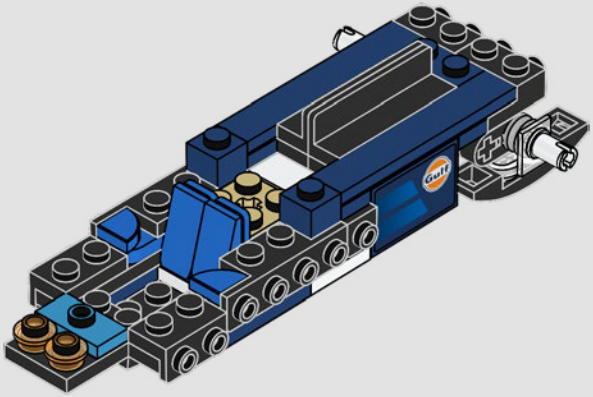



20

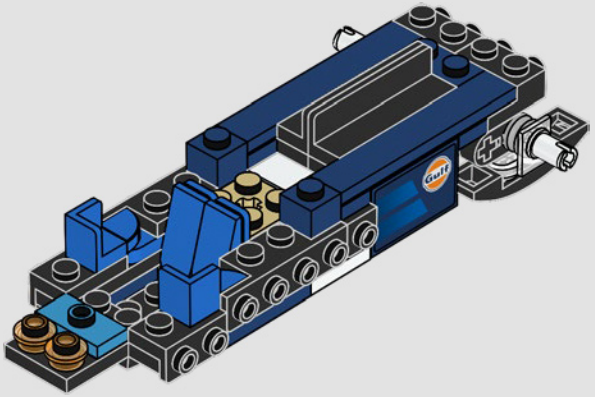

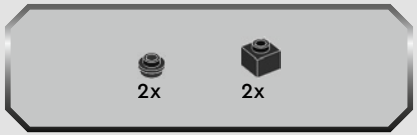

21

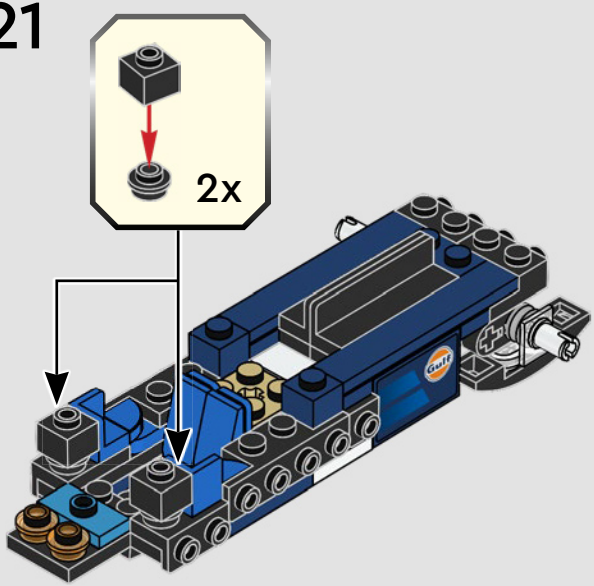



22

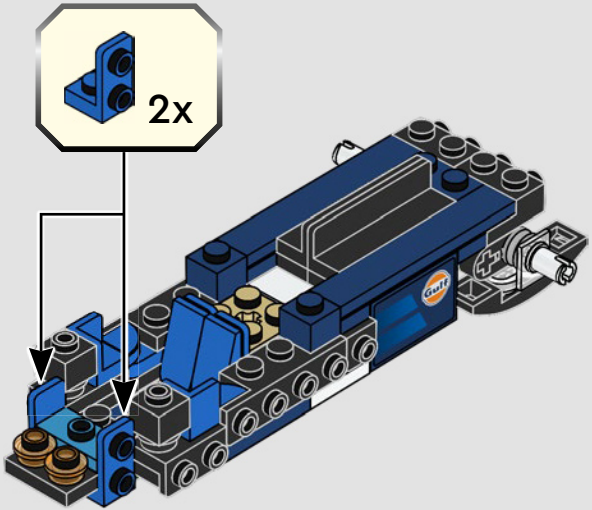



23

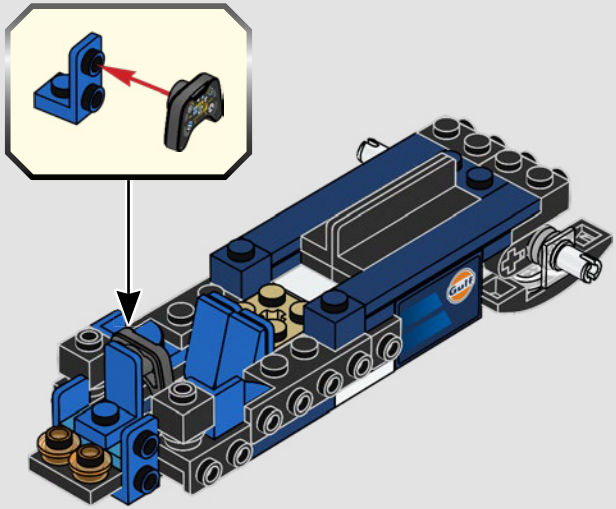



24

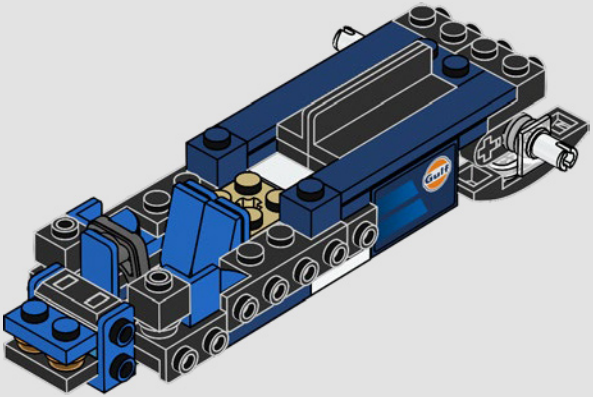

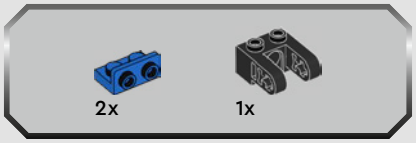

25

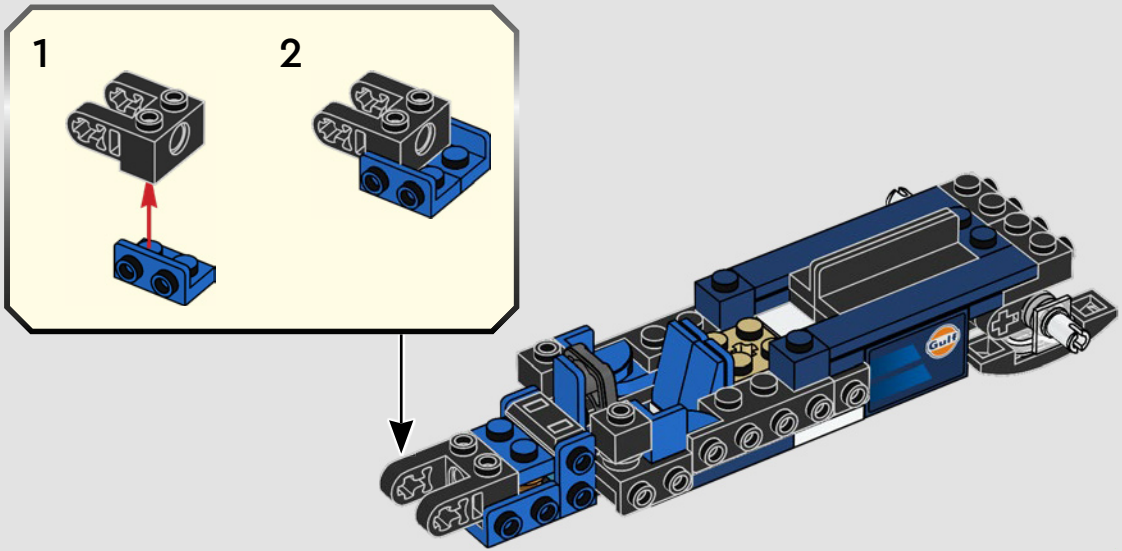



2x

26

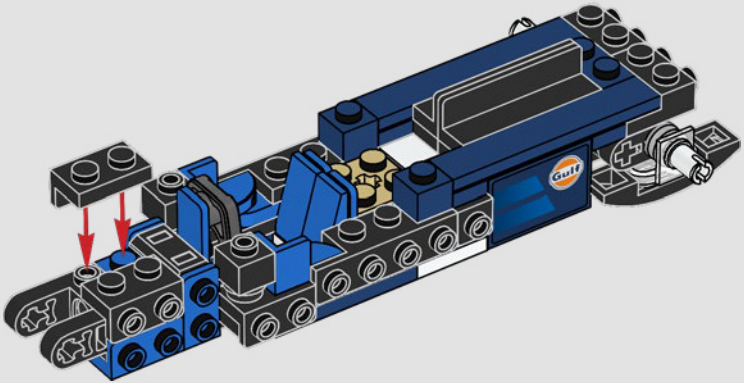



27

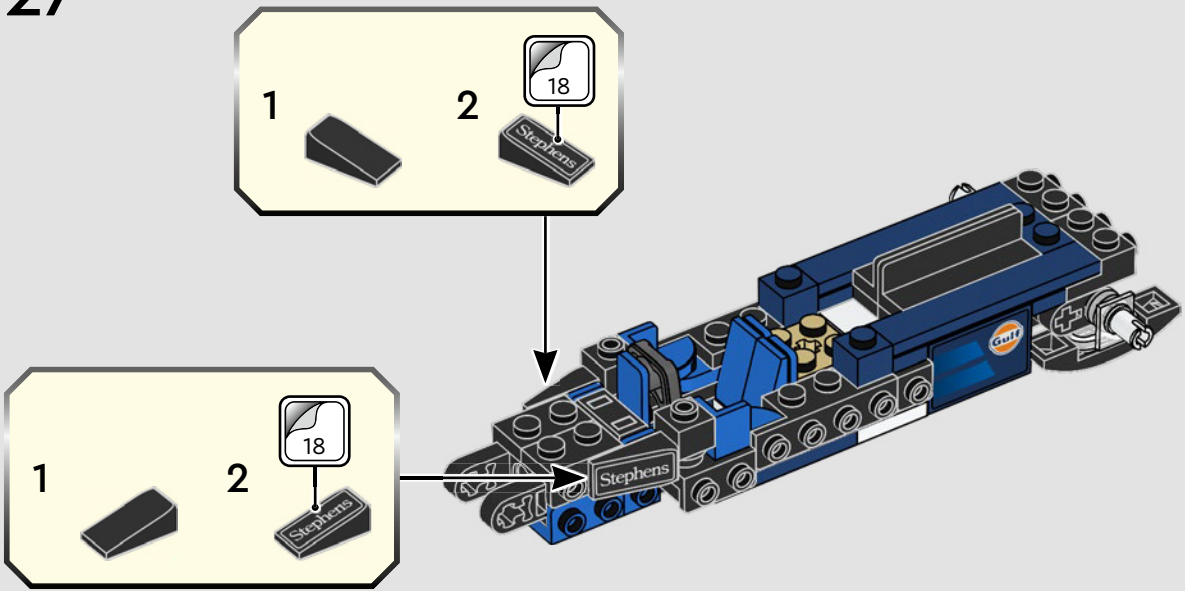

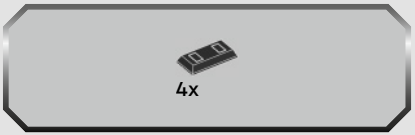

28

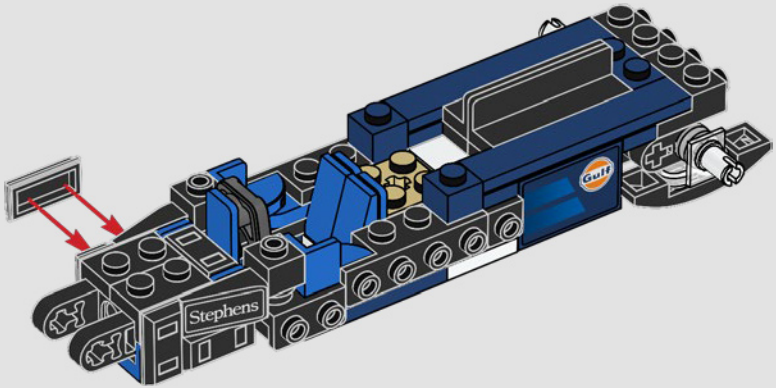

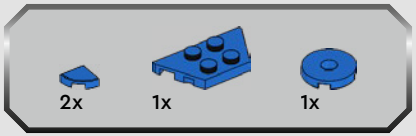

29

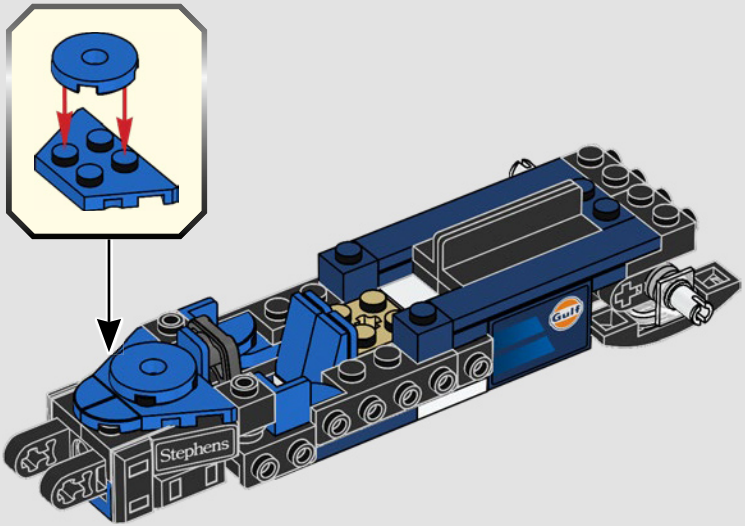


3
4

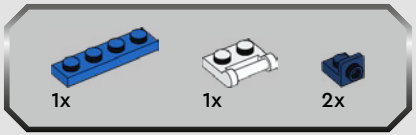

30

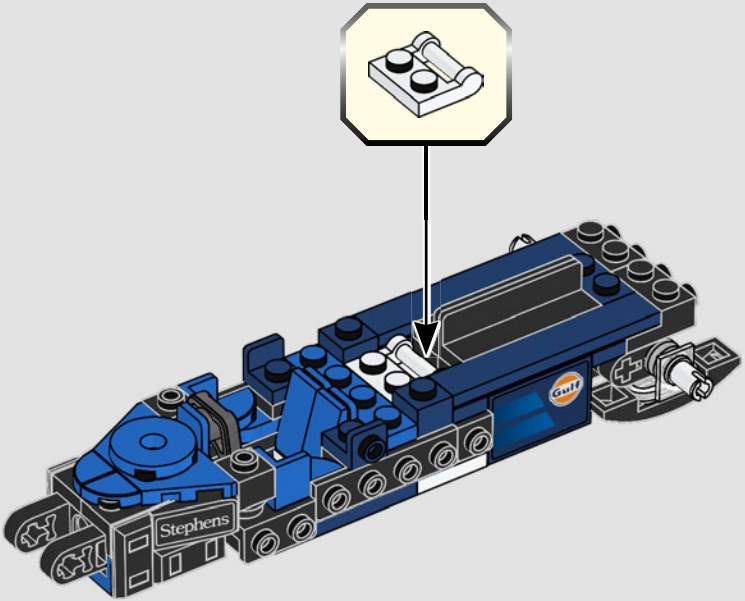



2x

31

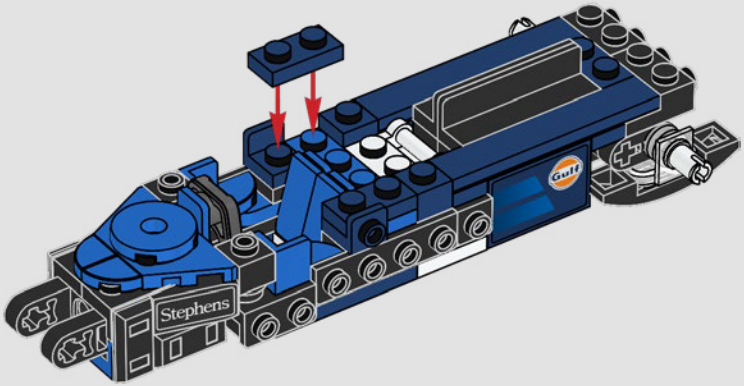



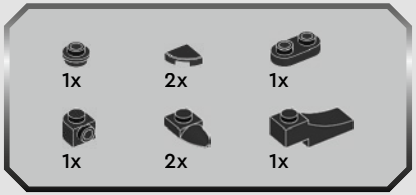

32

1

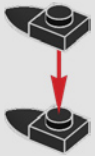

2



3



4

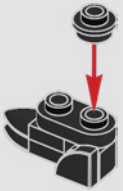

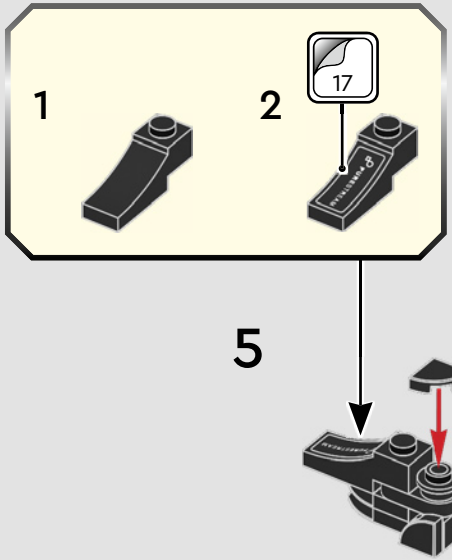
1
2
17
5

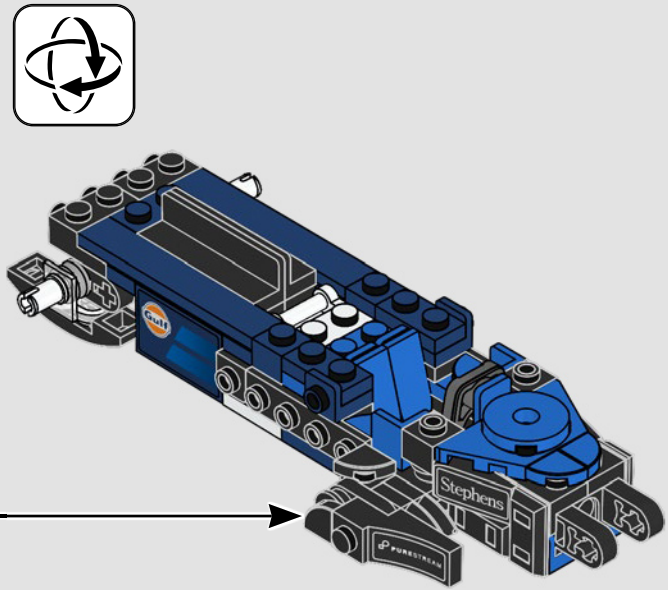
Stephens

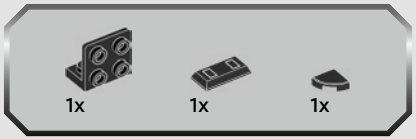

33

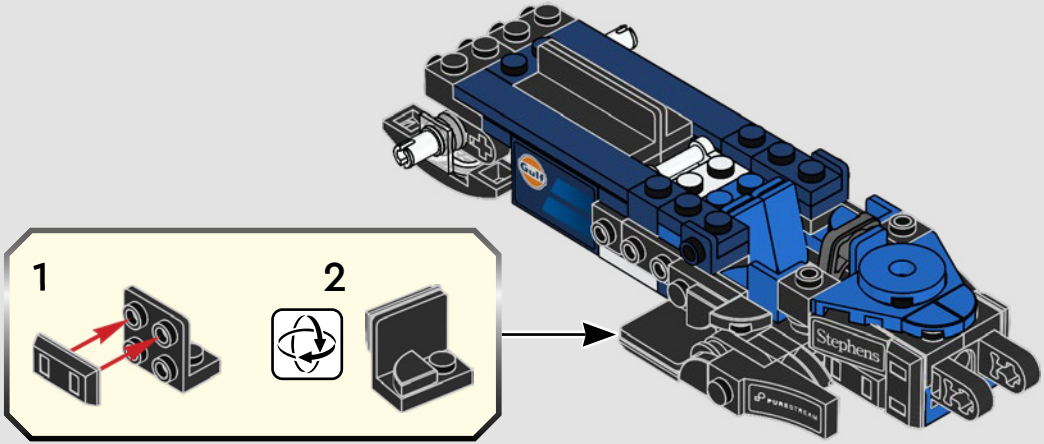



34

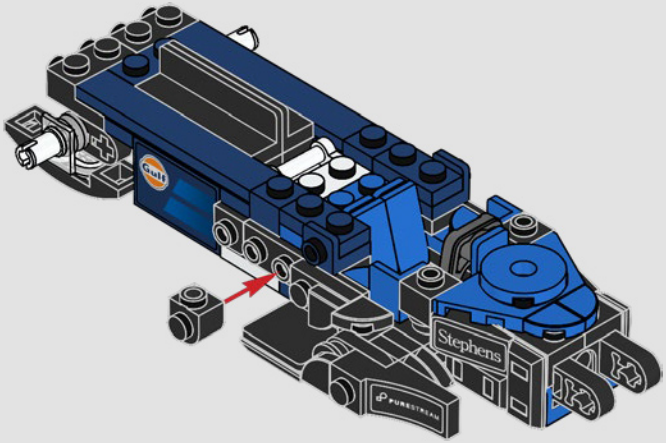

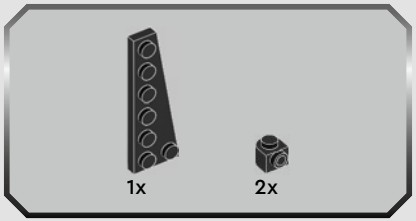

35

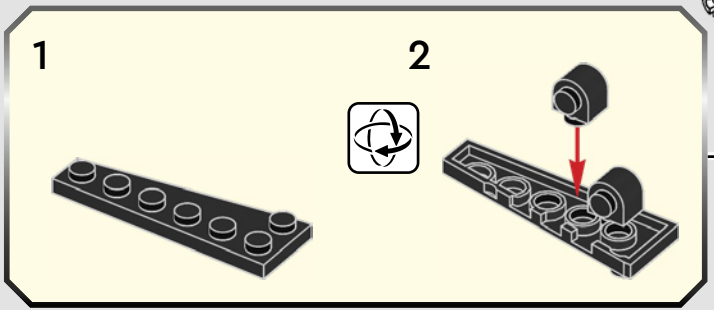

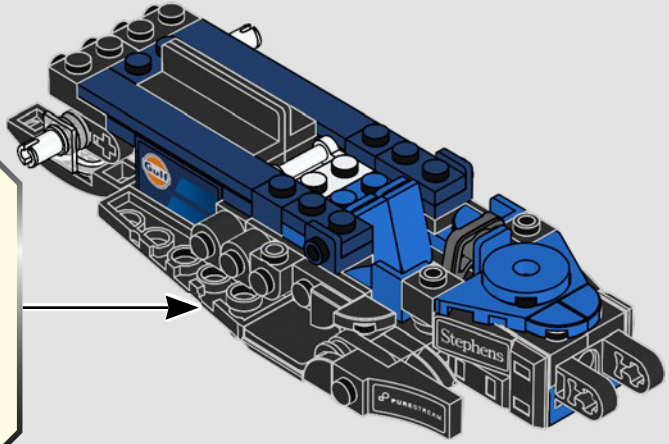

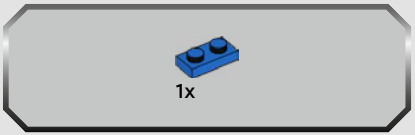

36

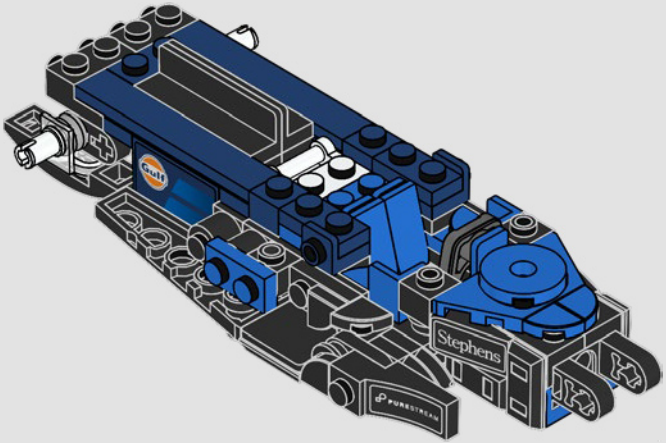



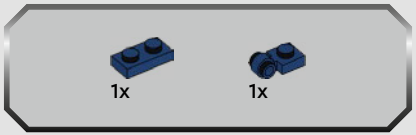

37

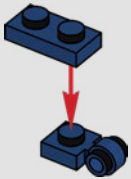

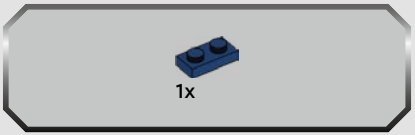

38

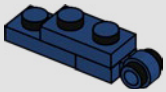

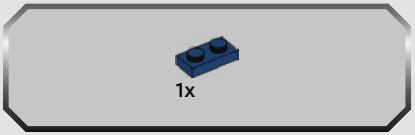

39

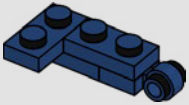

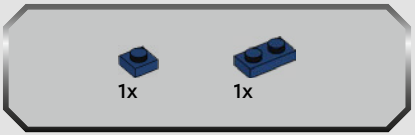

40

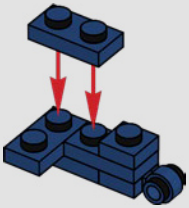

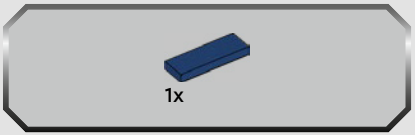

41

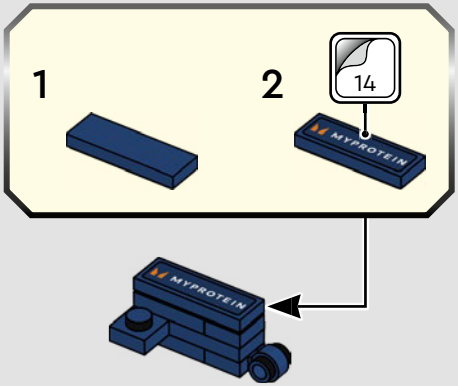

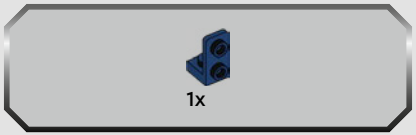

42



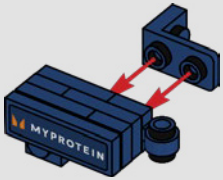

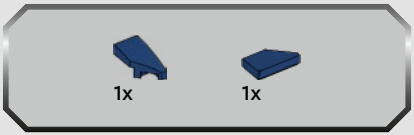

43

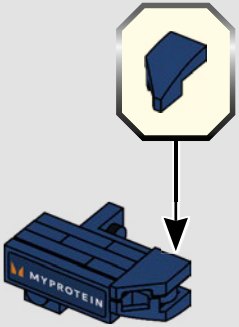

44

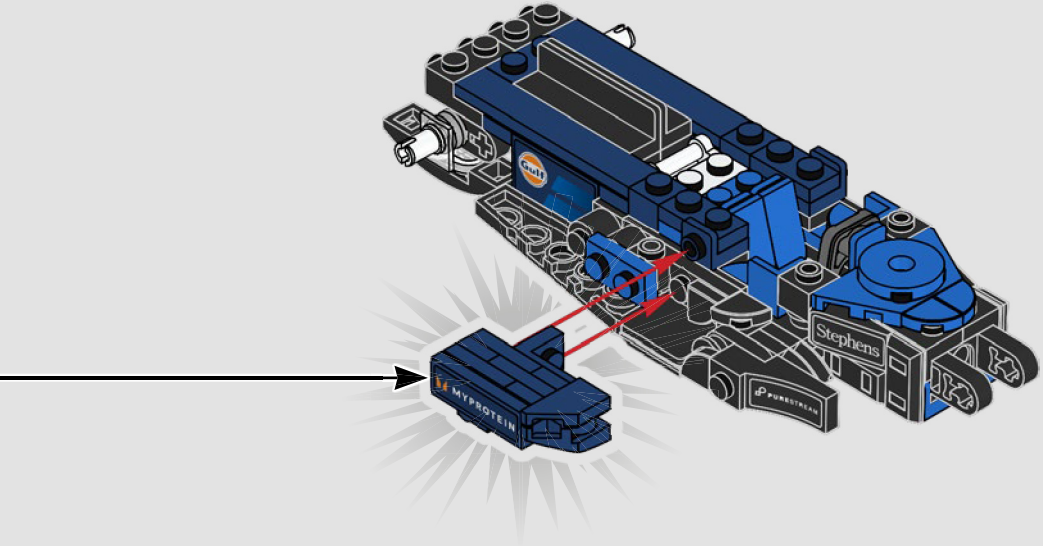

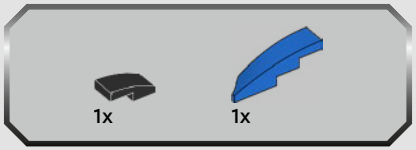
1x
1x

45

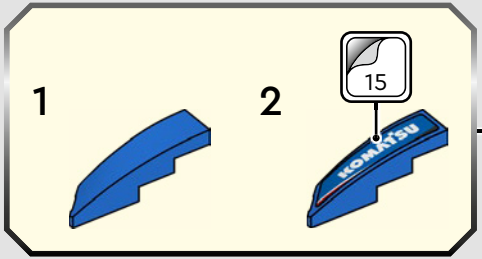
1
2
15
KOMATSU

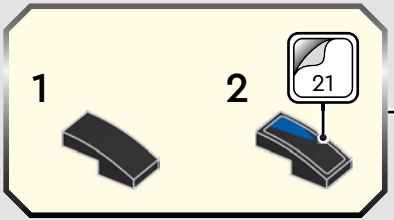
1
2
21

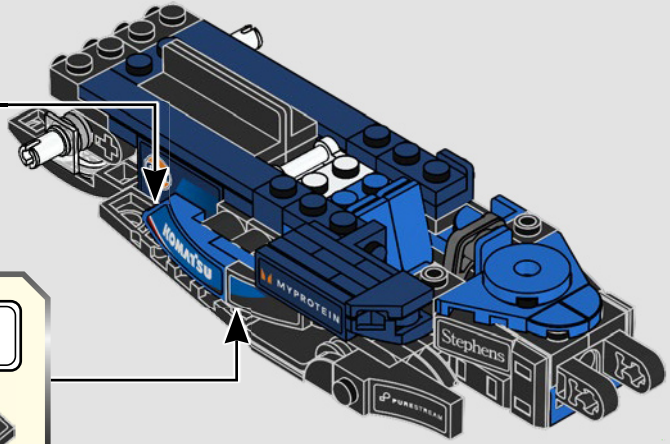
KOMATSU
MYPROTEIN
Stephens
PURESTREAM

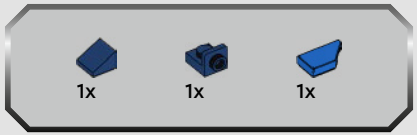

46

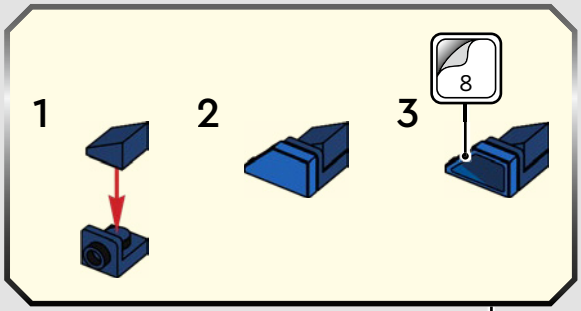

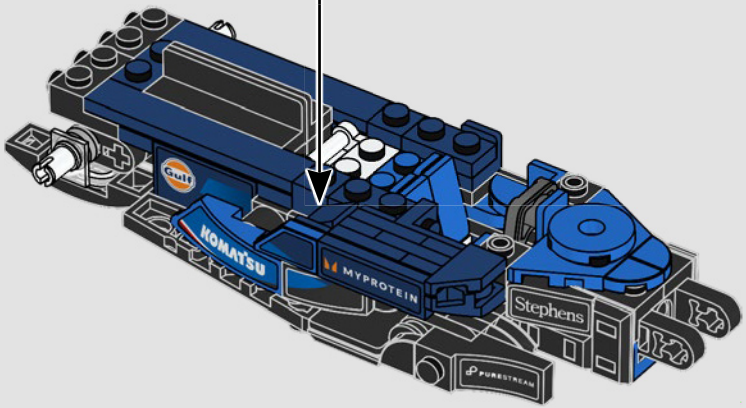



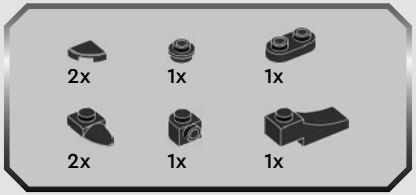

47

1



2



3

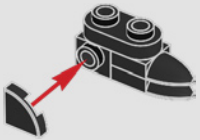

4

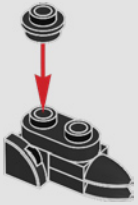

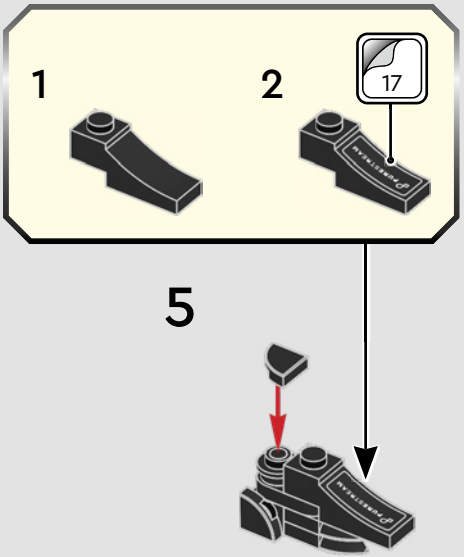
1
2
17
5

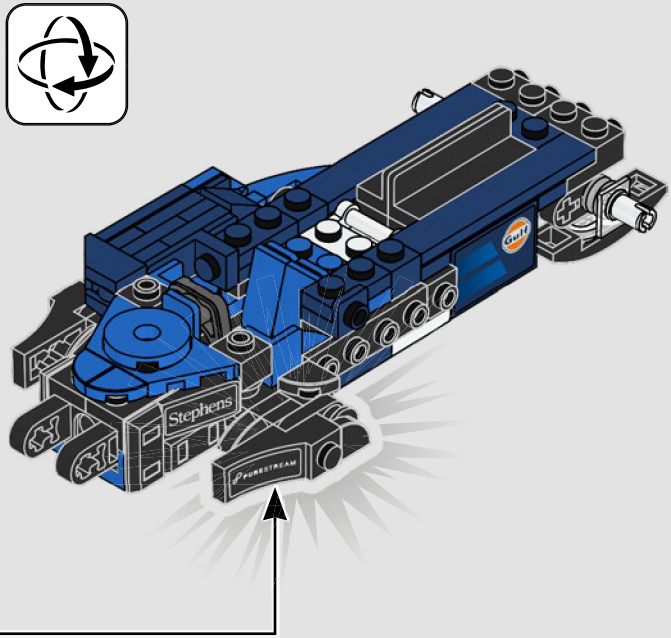
Stephens
Gulf

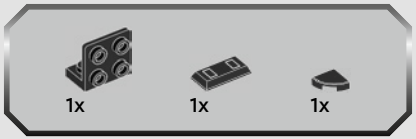

48

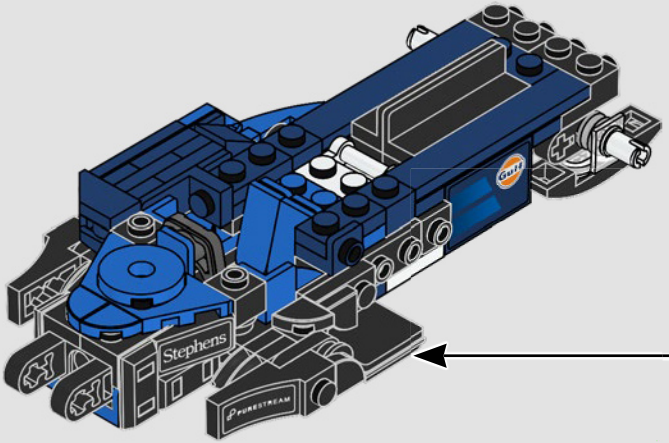

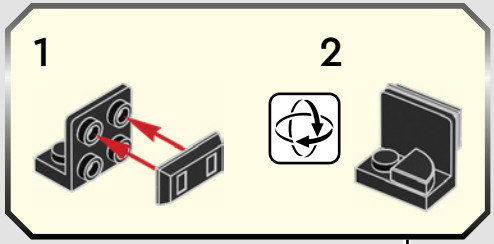



49

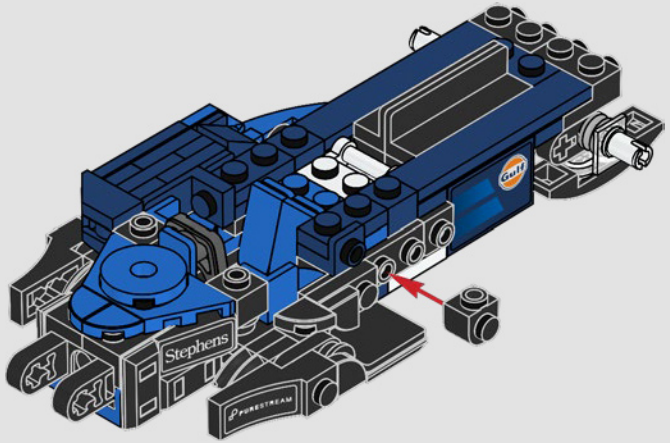

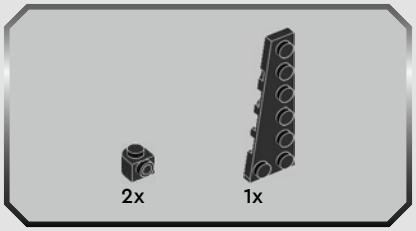

50

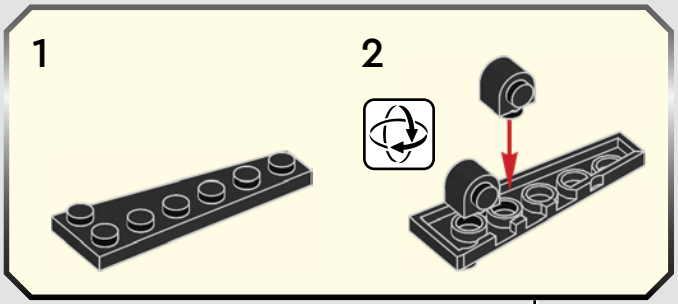

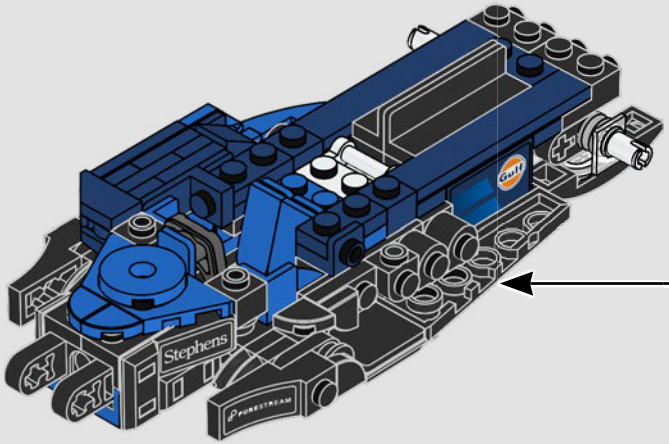

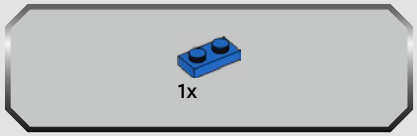

51

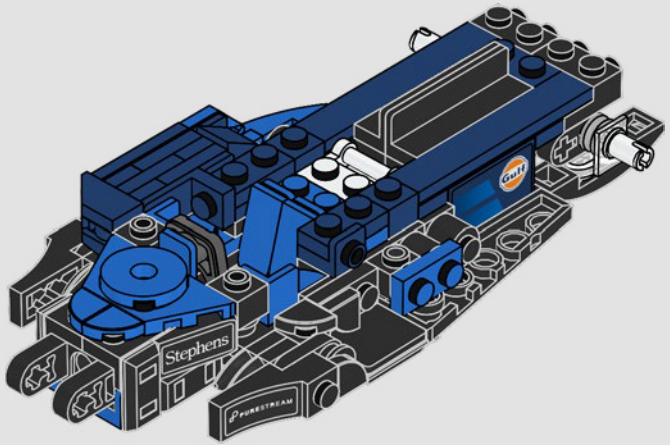



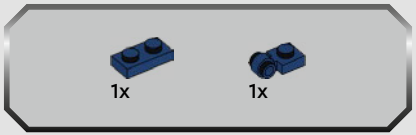

52

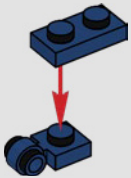

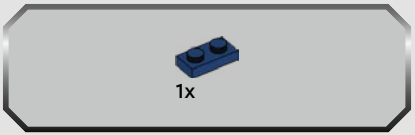

53

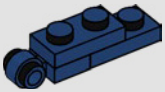

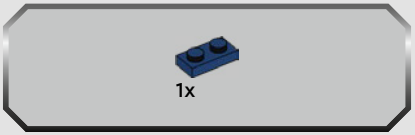

54

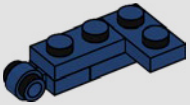

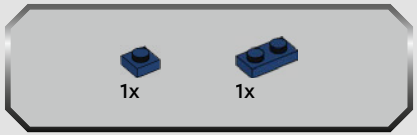

55

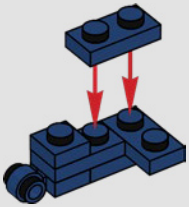

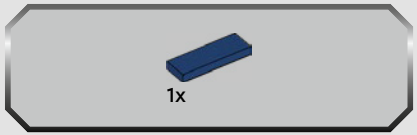

56

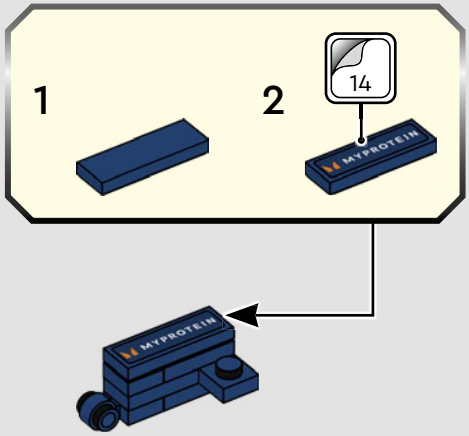

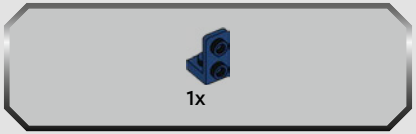

57



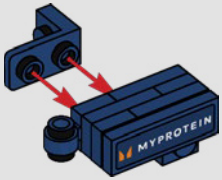

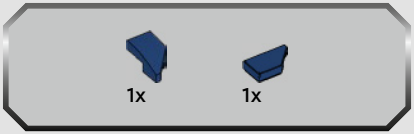

58

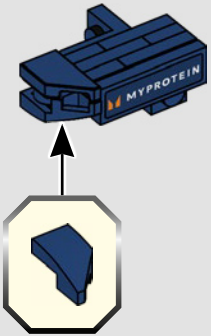

59

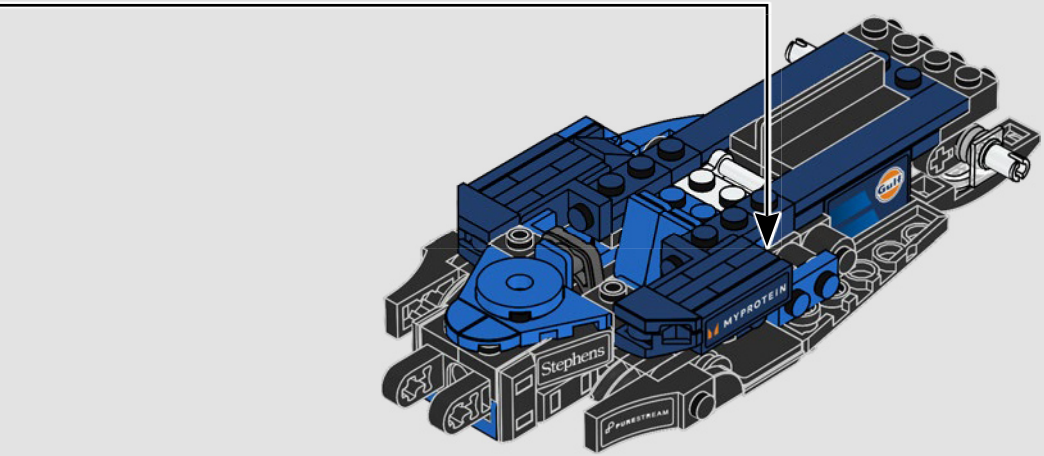

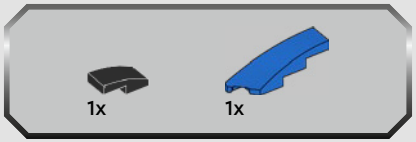

60

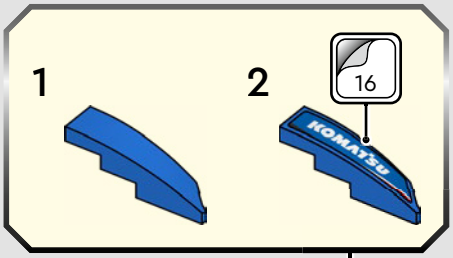

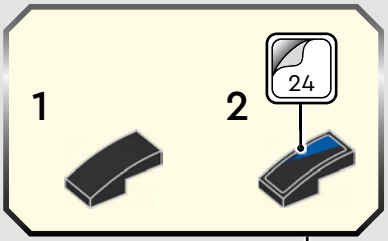

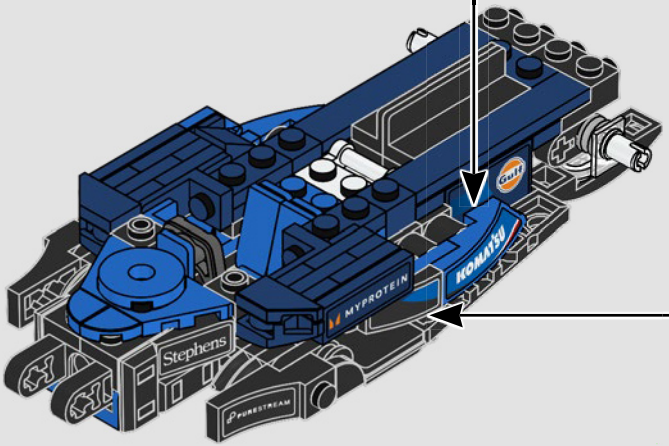

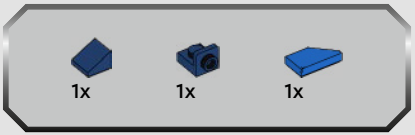

61

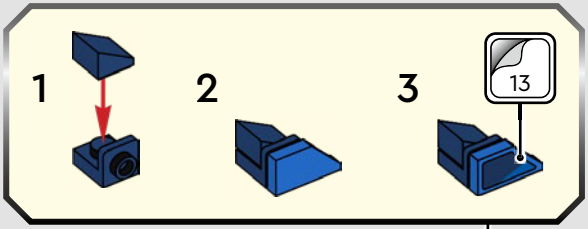

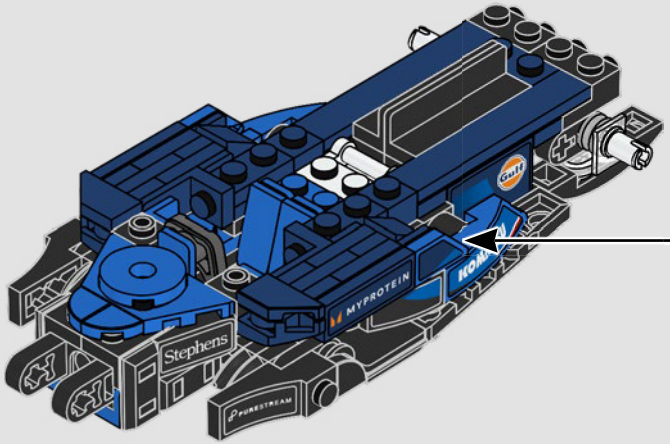



62

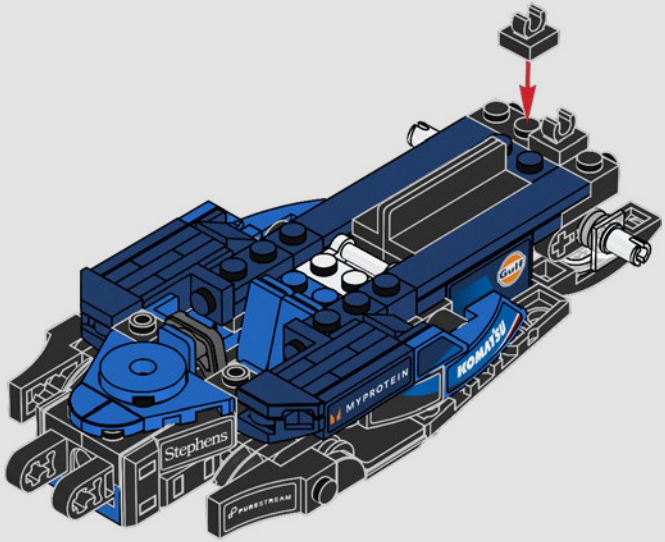




1x


1x

63

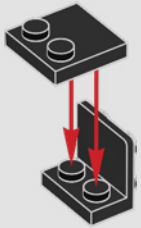


1x


1x

64

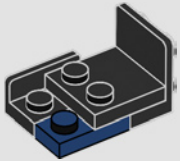


1x

65

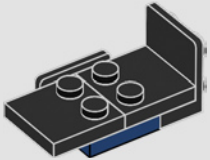



66

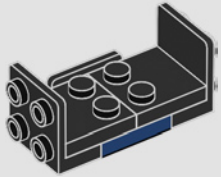



67

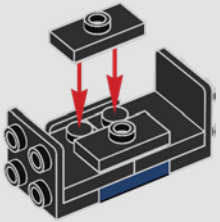



68

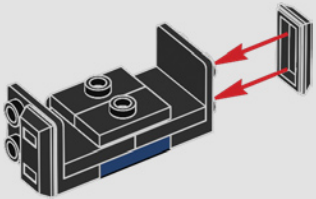

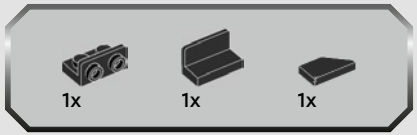

69



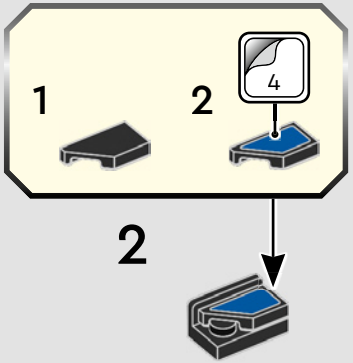

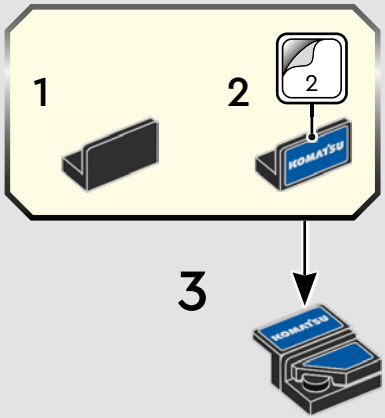

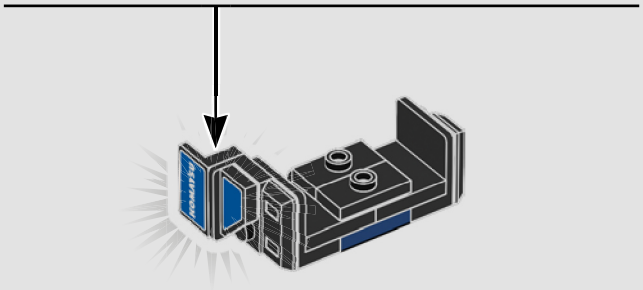

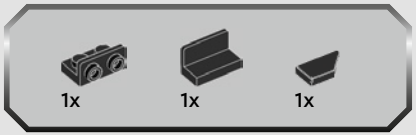

70



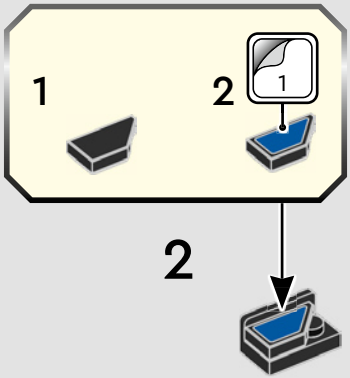

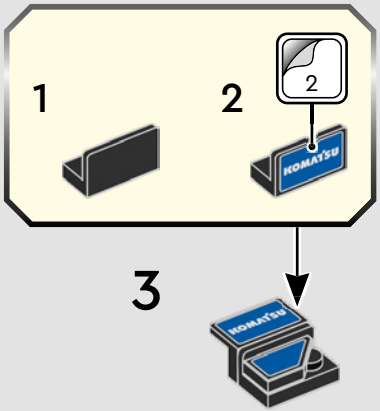

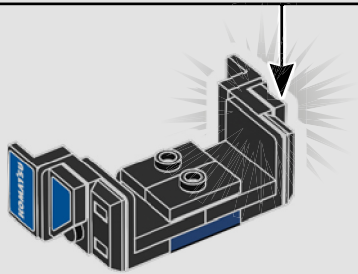



71

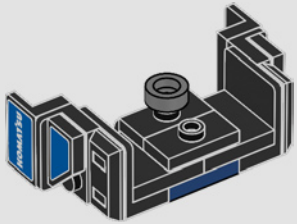

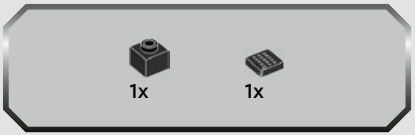

72

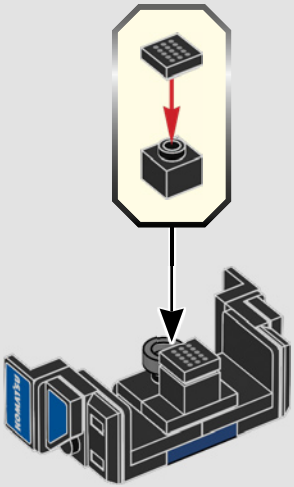

73

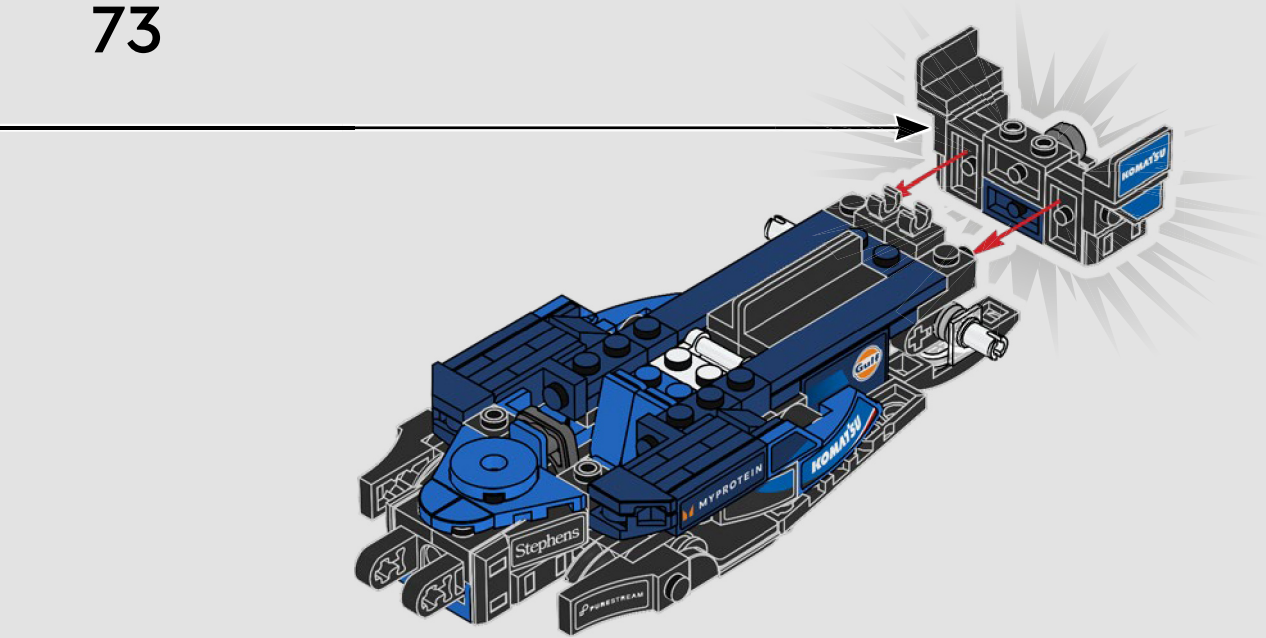

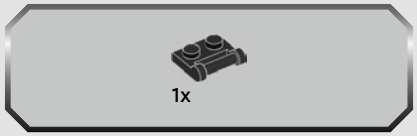

74

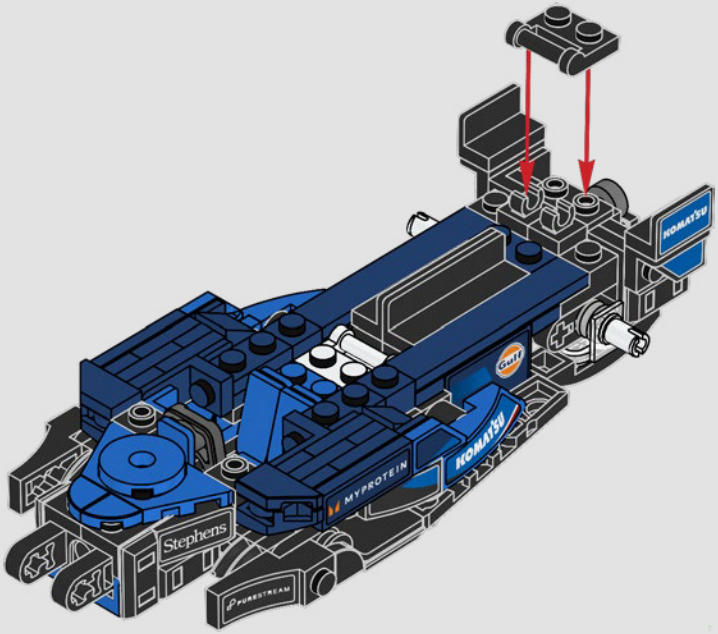

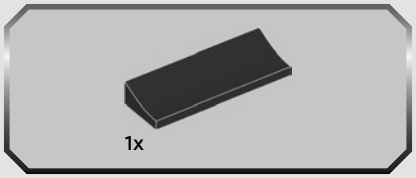

75

1



2

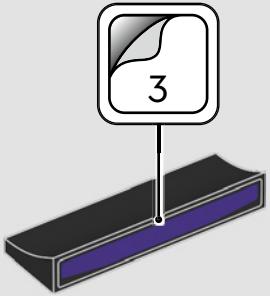

3

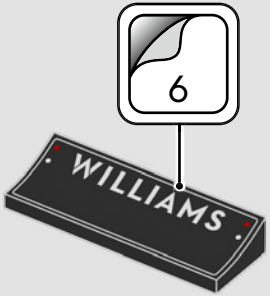

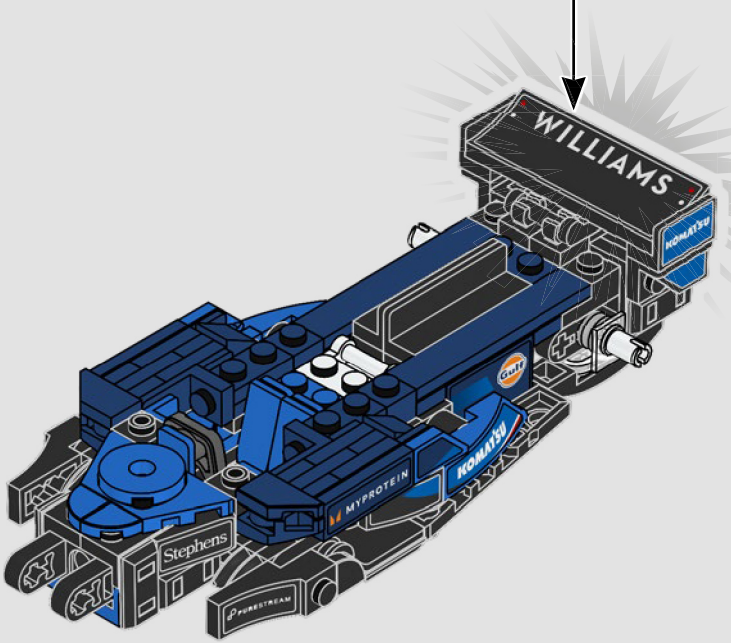
WILLIAMS
KOMATSU
Gulf
MYPROTEIN
KOMATSU
Stephens
PURESTREAM


1x

76

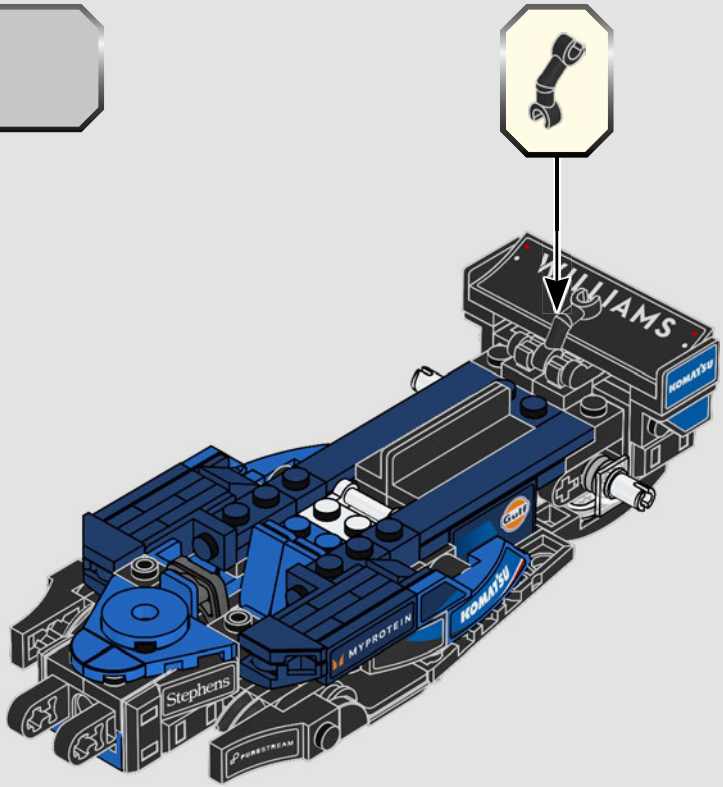
WILLIAMS
KOMATSU
Gulf
KOMATSU
MYPROTEIN
Stephens
PURESTREAM

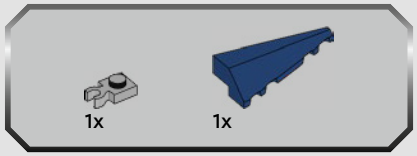

77

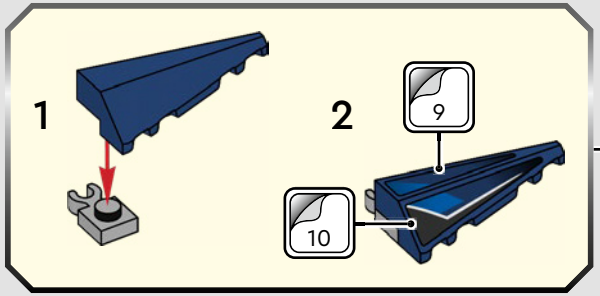

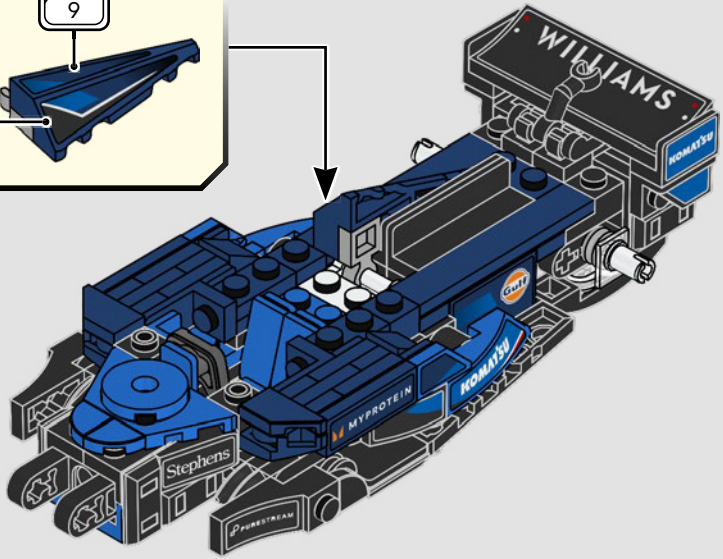

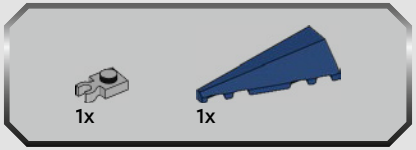

78

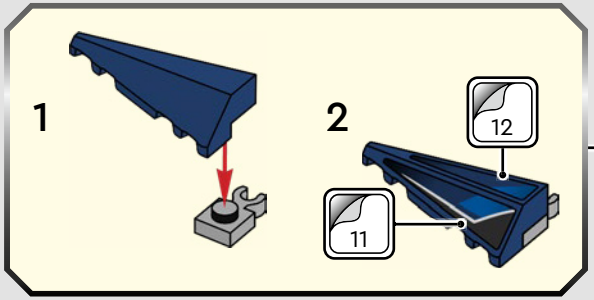

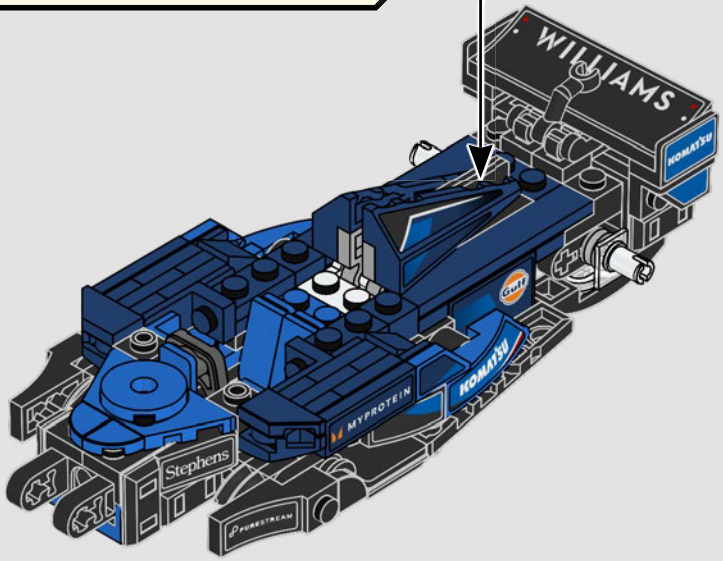


5
6

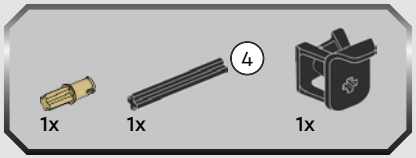

79

1

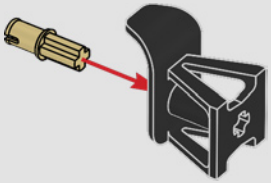

2

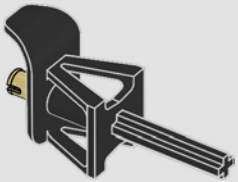

3

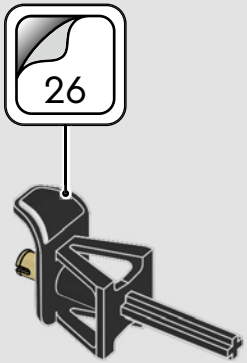



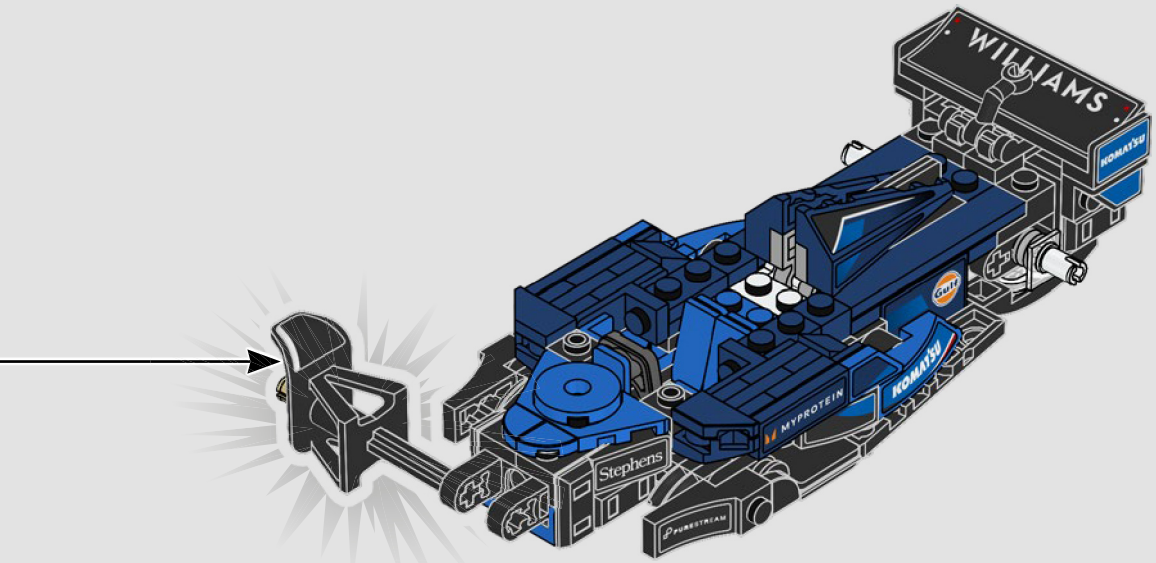
WILLIAMS
KOMATSU
Gulf
MYPROTEIN
KOMATSU
Stephens
PURESTREAM

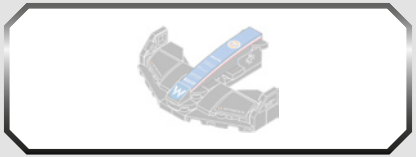

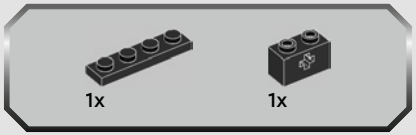

80

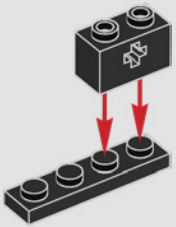

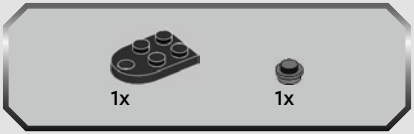

81

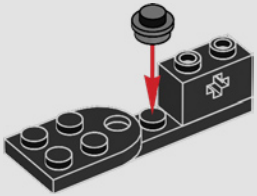

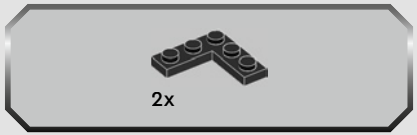

82

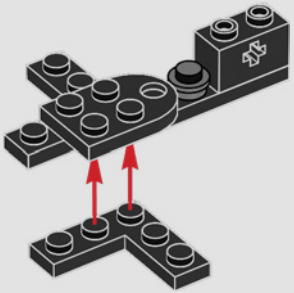



83

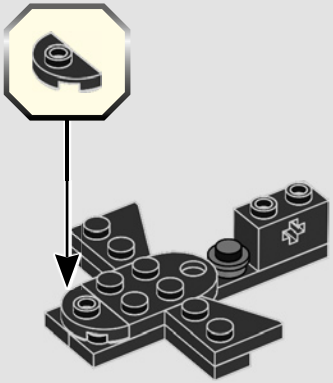



84

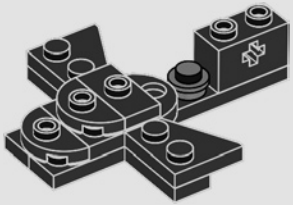



85

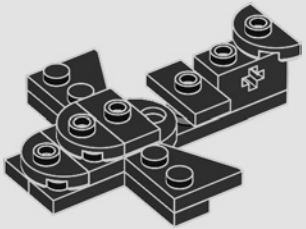



1x

86

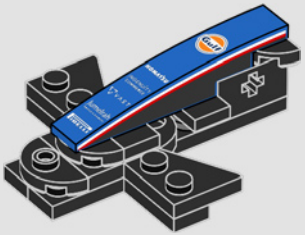



1x

87

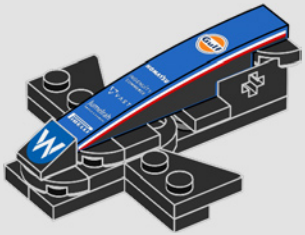



88

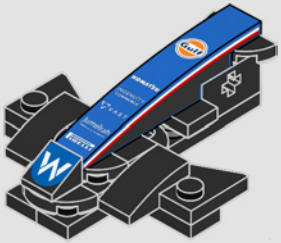



89

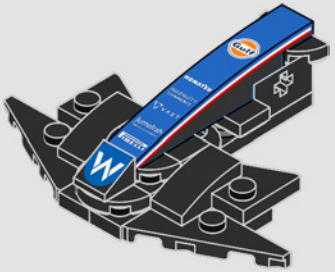



90

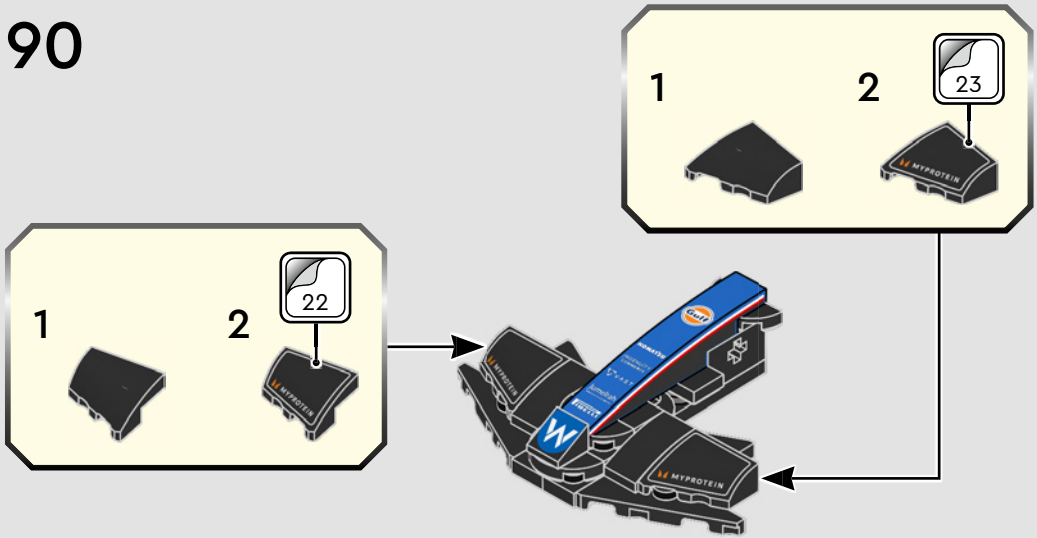

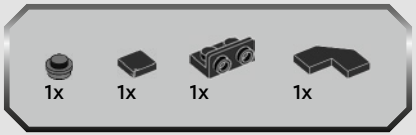

91

1

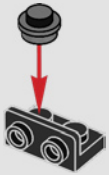

2



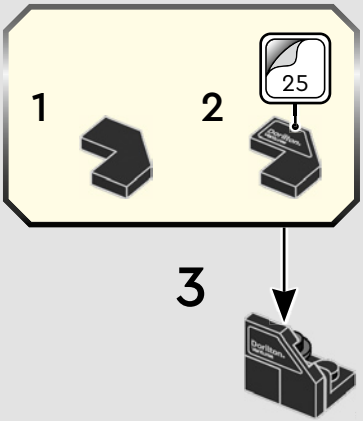

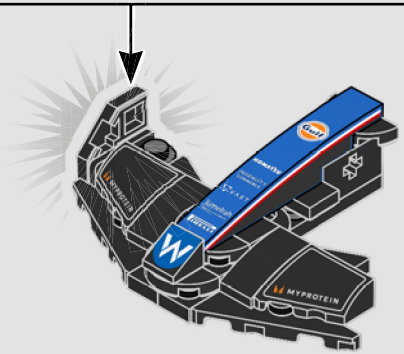

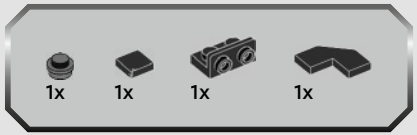

92

1



2



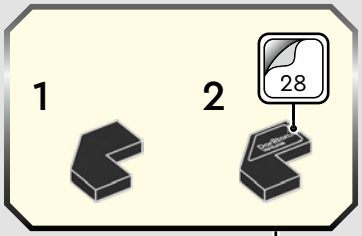

3



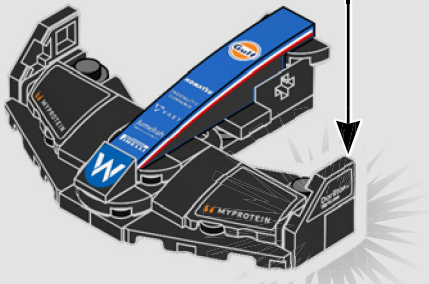

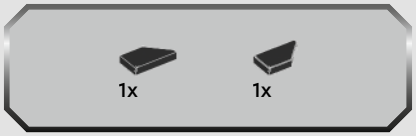

93

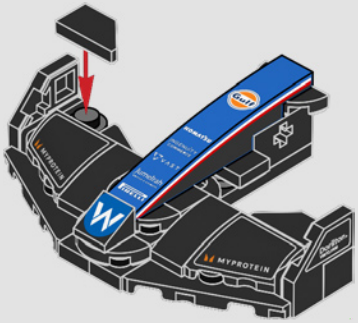

94

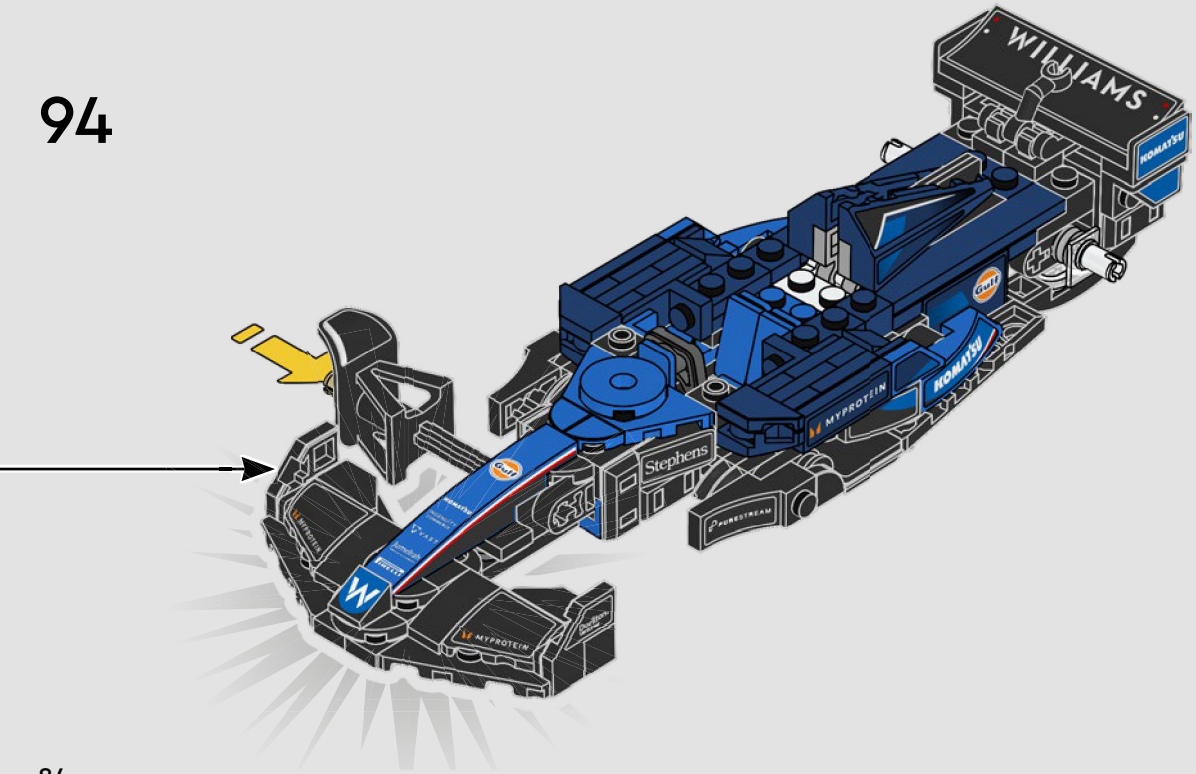


1x
1x

95

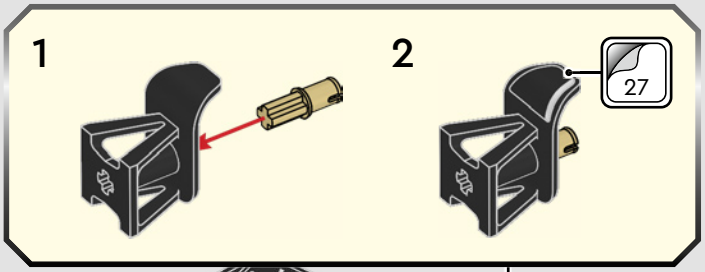
1
2
27

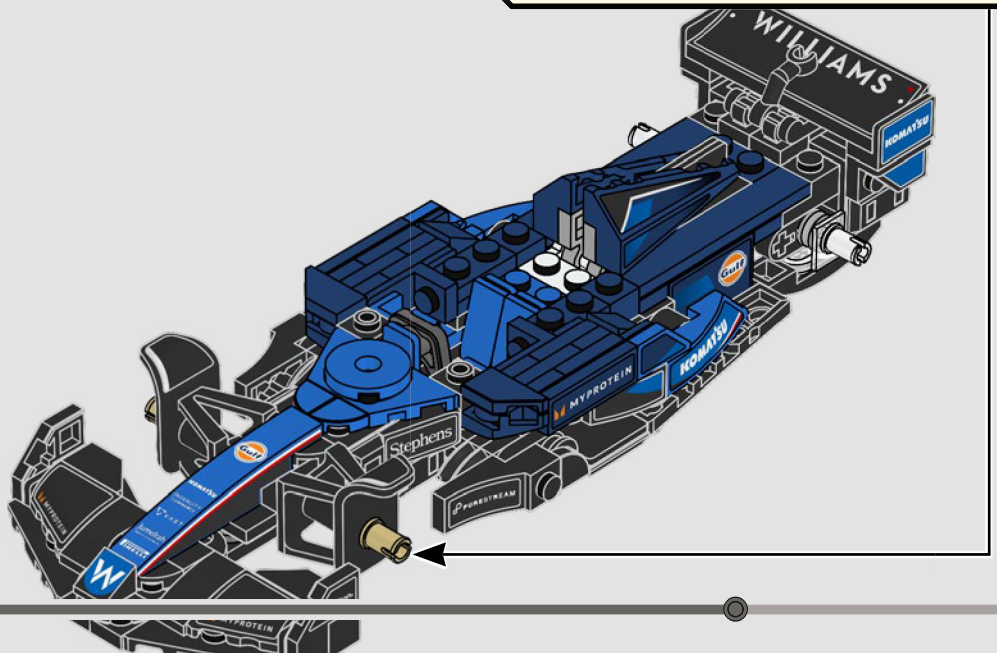
WILLIAMS
KOMATSU
Gulf
MYPROTEIN
Stephens
PURESTREAM

2x

96

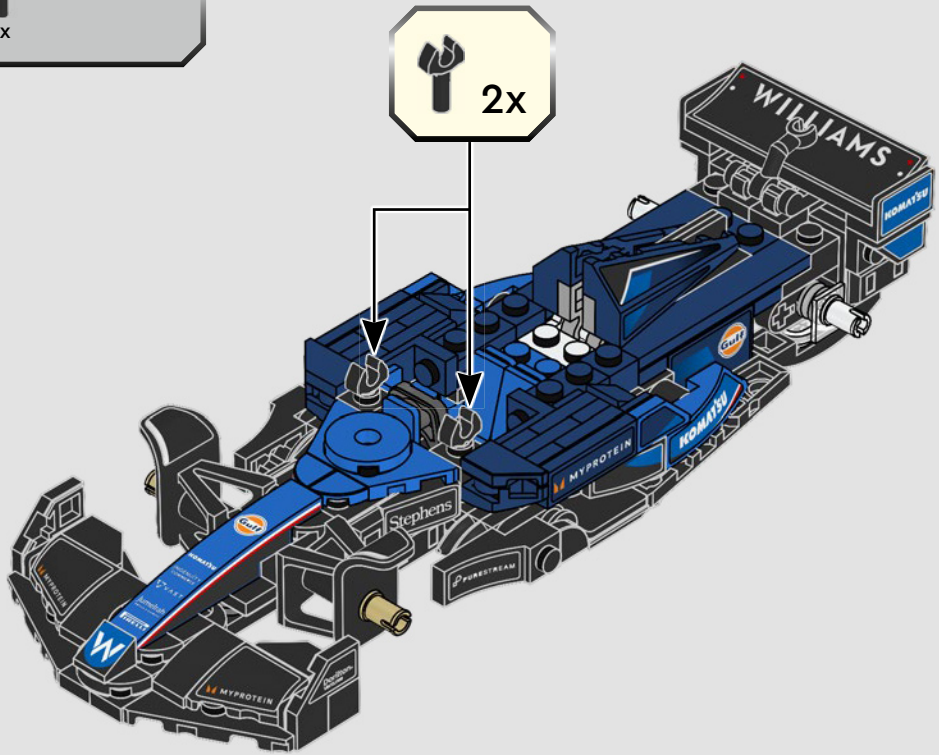



97

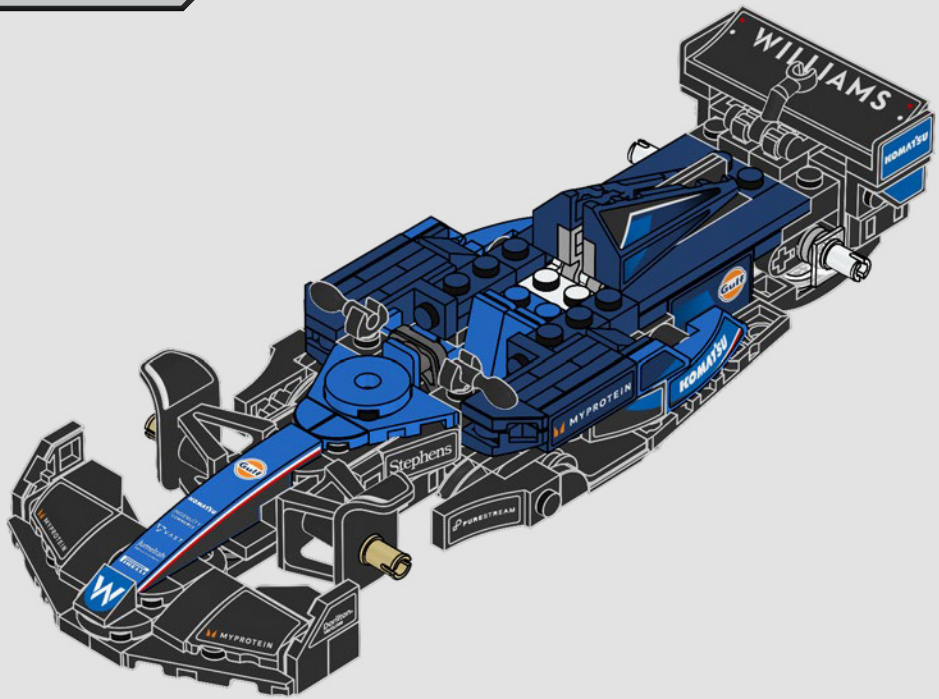


2x
2x

98

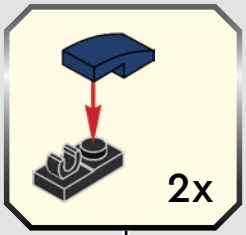
2x

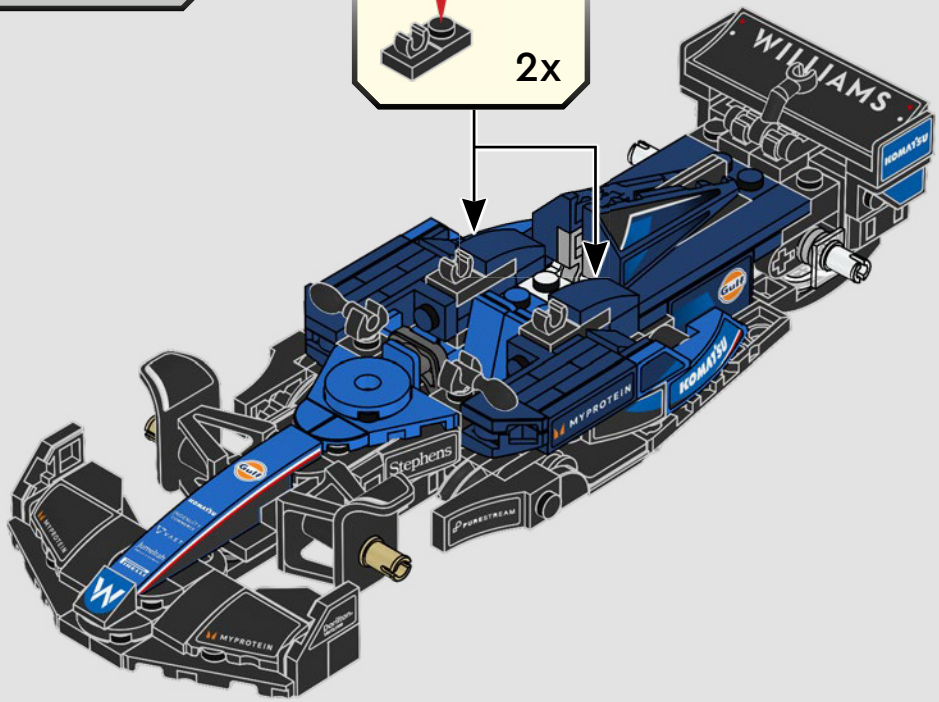
WILLIAMS
KOMATSU
Gulf
MYPROTEIN
Stephens
PURESTREAM
PIRELLI



99

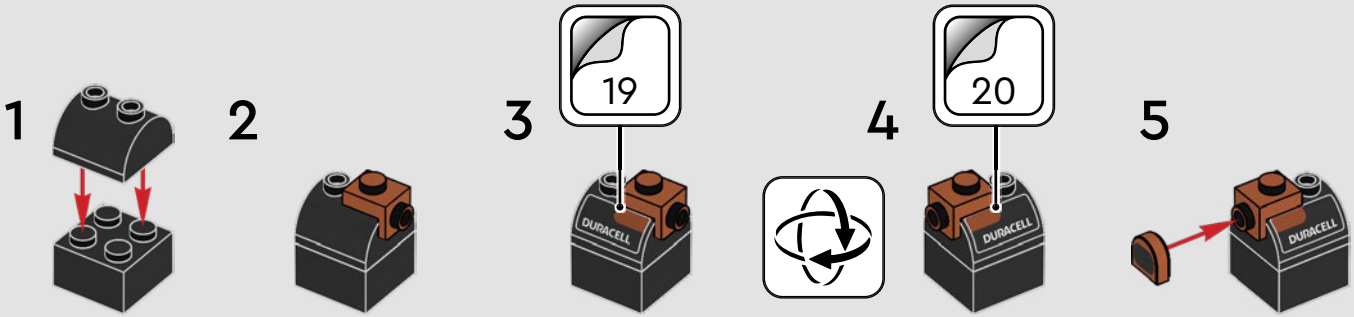

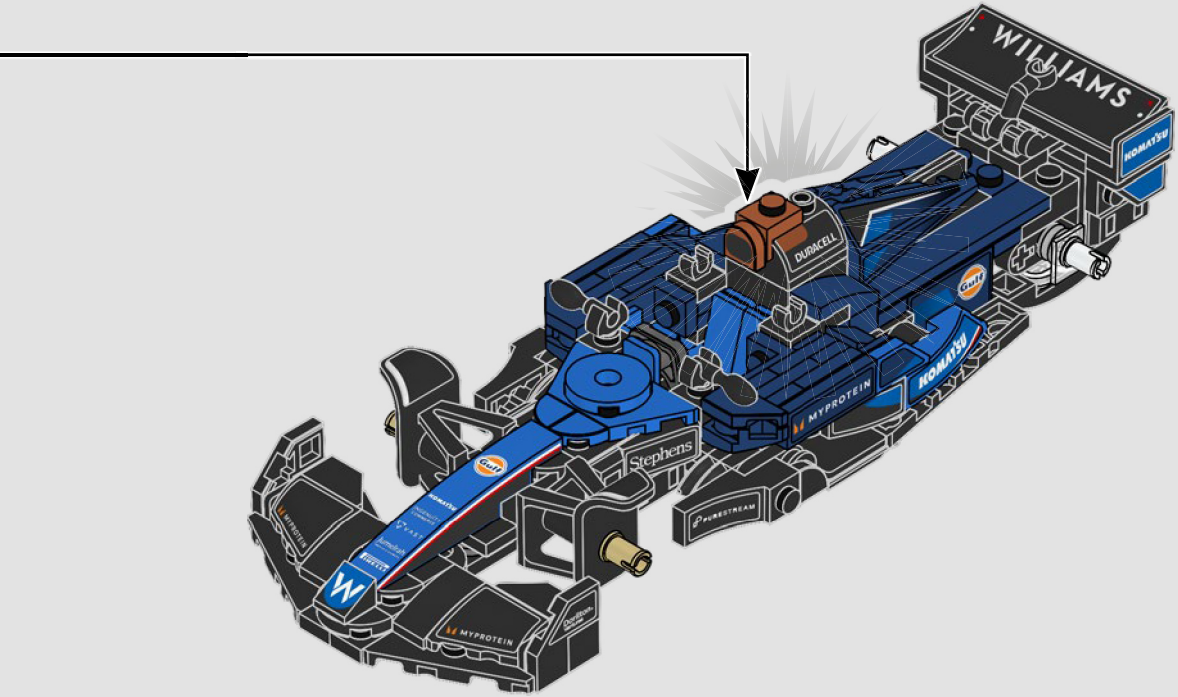
WILLIAMS
KOMATSU
DURACELL
Gulf
MYPROTEIN
Stephens
PURESTREAM

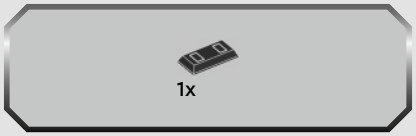
1x

100

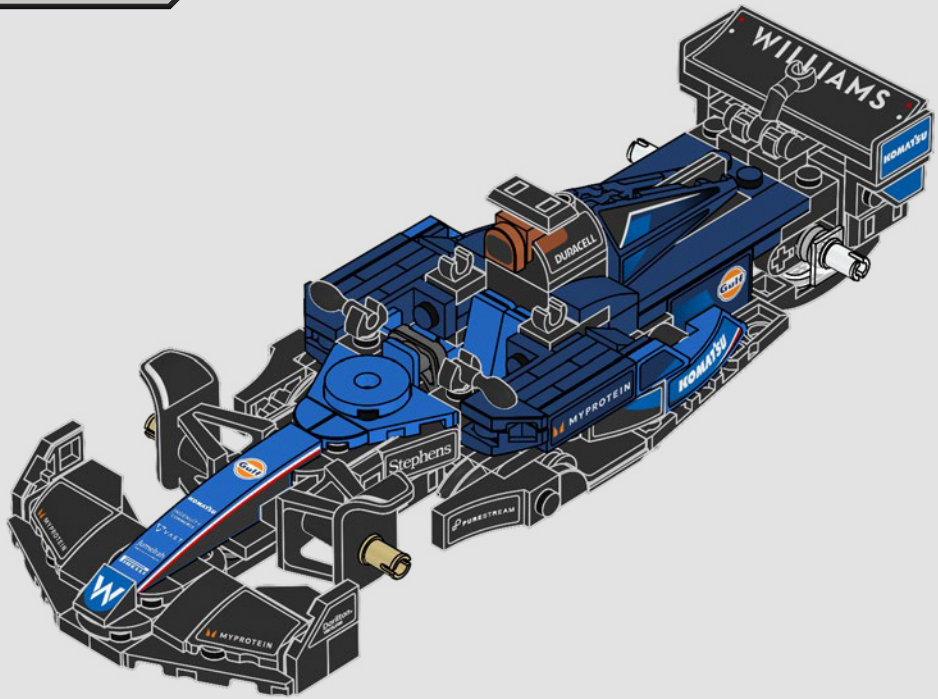
WILLIAMS
KOMATSU
DURACELL
Gulf
MYPROTEIN
Stephens
PUMASTREAM
PIRELLI

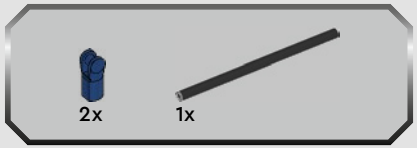
2x
1x

101

1



2



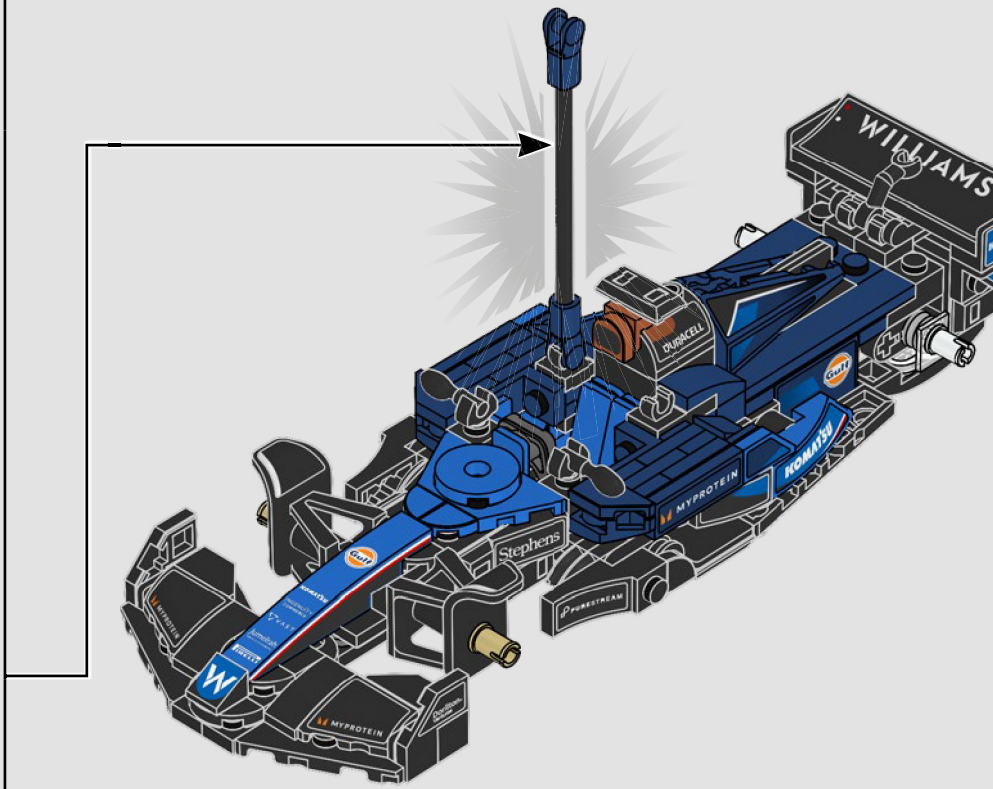
WILLIAMS
DURACELL
Gulf
KOMATSU
MYPROTEIN
Stephens
PUREBEAUTY
MYPROTEIN

102

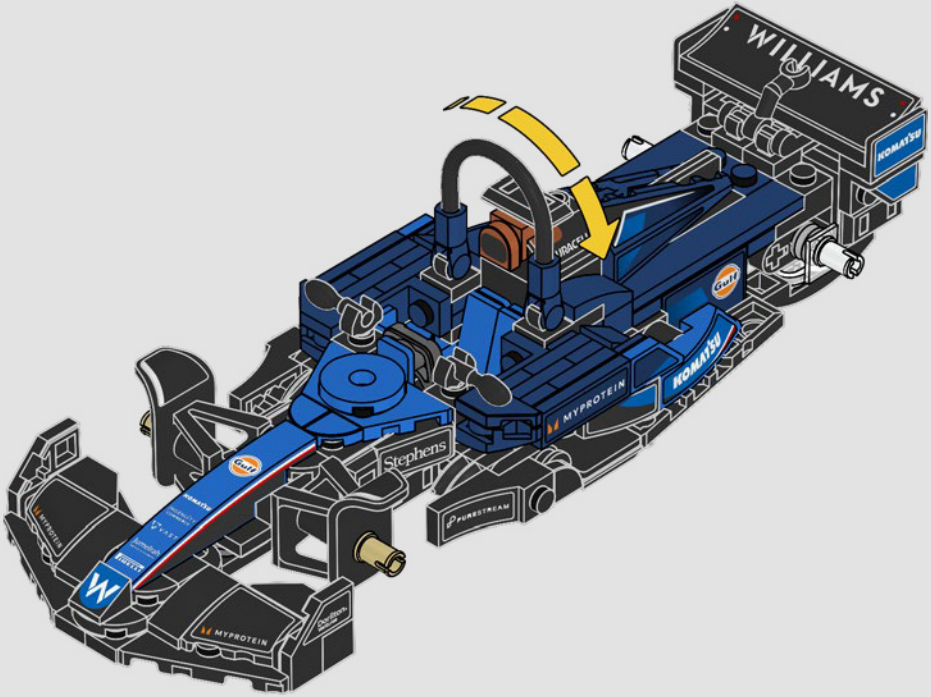
WILLIAMS
KOMATSU
MYPROTEIN
Stephens
Gulf
PIRELLI
PURESTREAM

1x

103

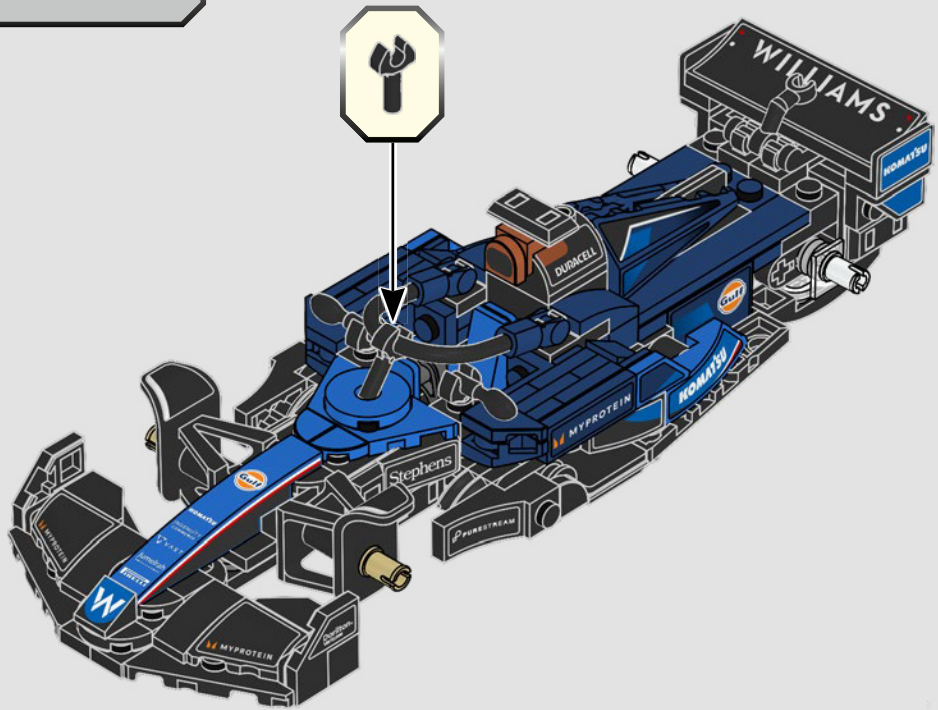
WILLIAMS
KOMATSU
DURACELL
Gulf
MYPROTEIN
Stephens
PURESTREAM
PIRELLI





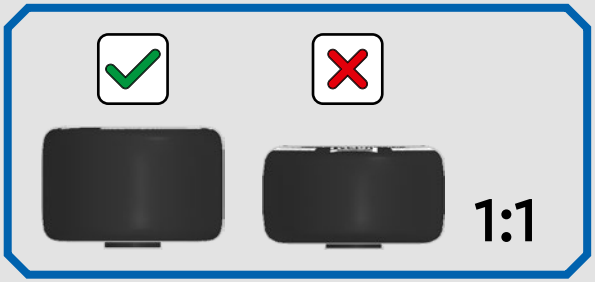

104

1



2



2x

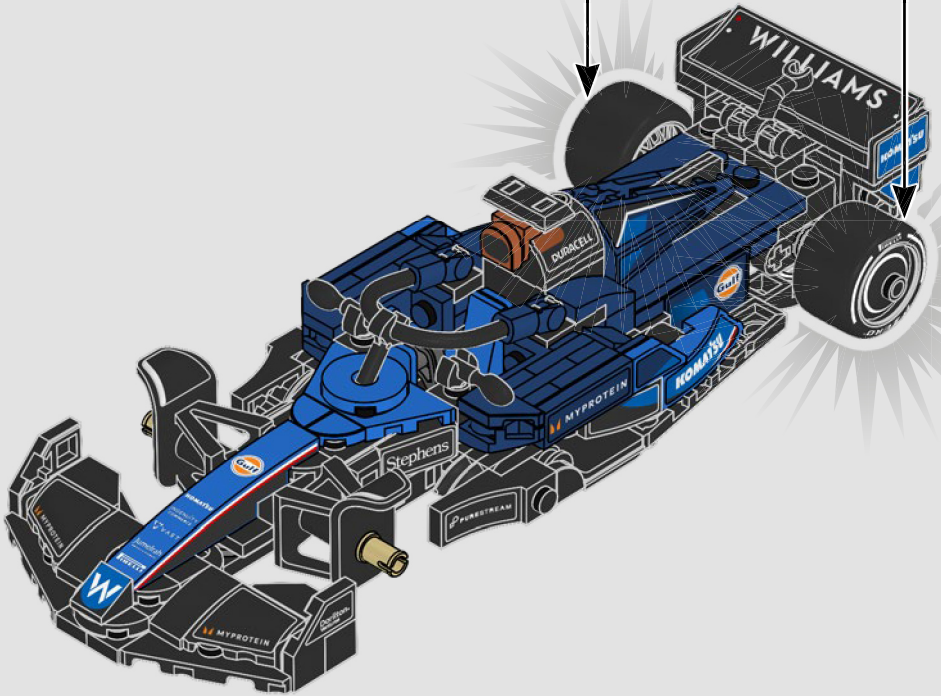
WILLIAMS
DURACELL
Gulf
MYPROTEIN
HOMATES
Stephens
PURESTREAM
MYPROTEIN



105

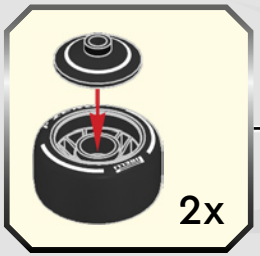

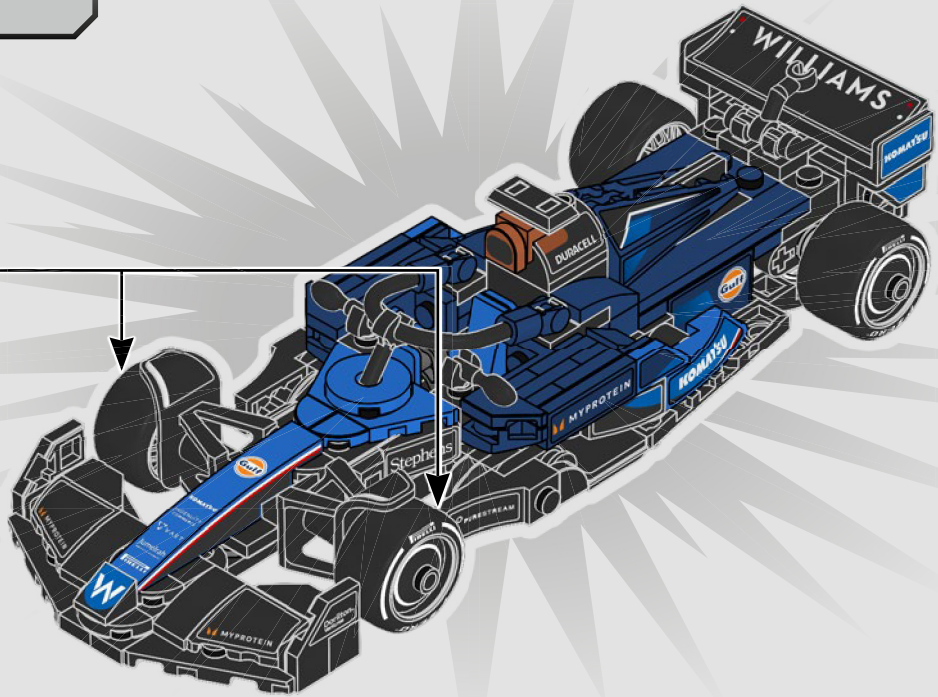

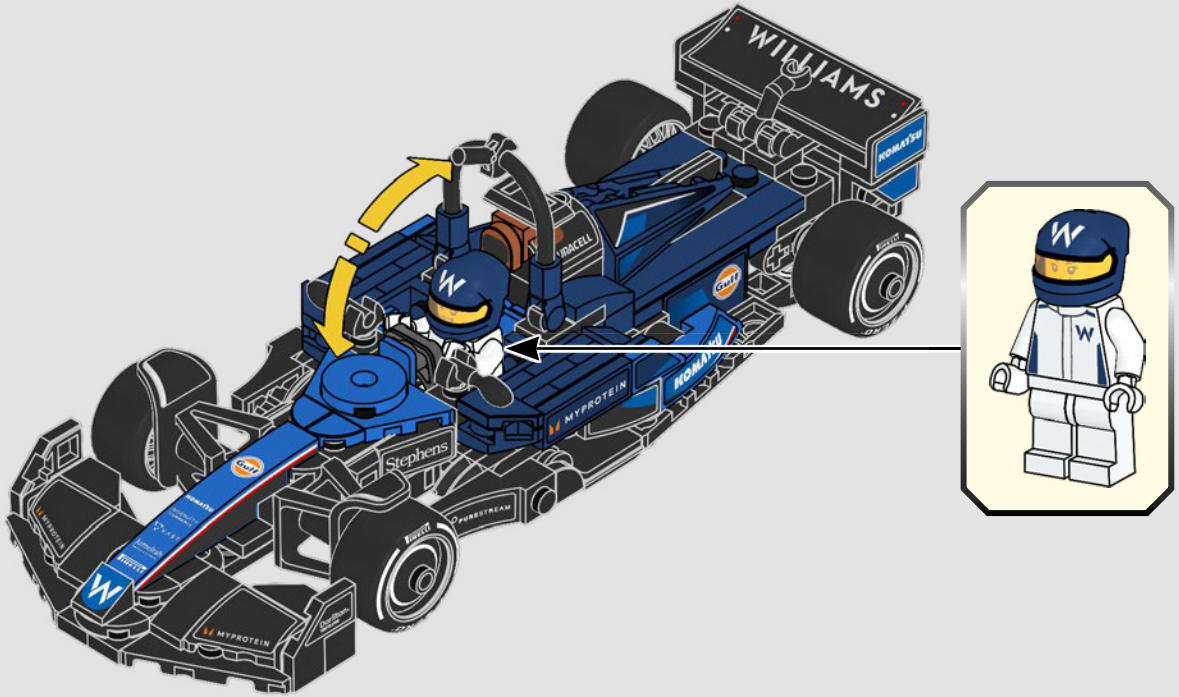
WILLIAMS
HONDA
MYPROTEIN
Stephens
PUREBSTREAM
Gulf

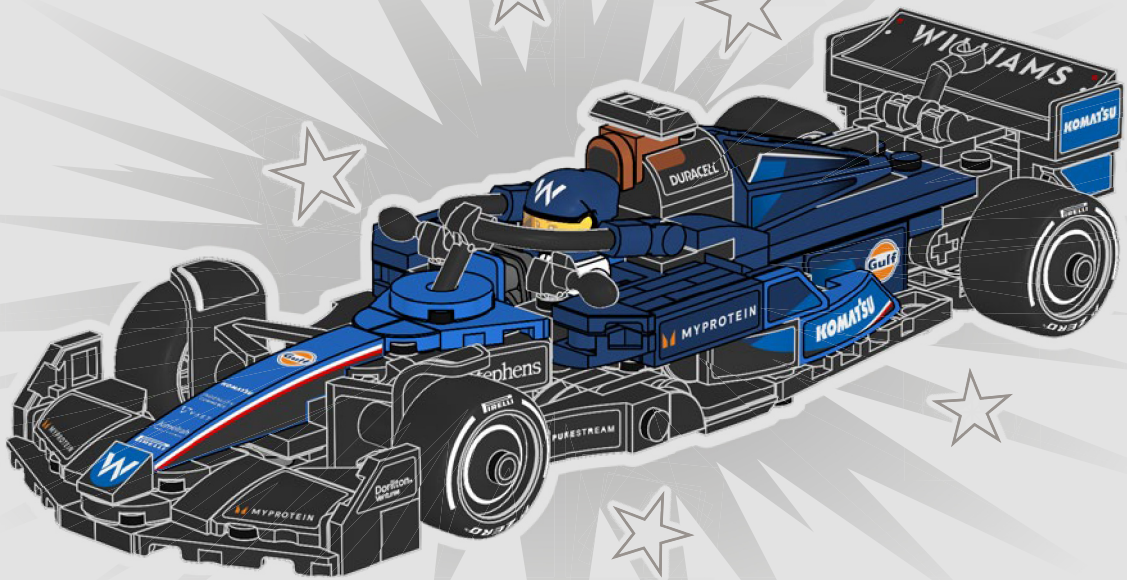
WILLIAMS
KOMATSU
DURACELL
Gulf
MYPROTEIN
KOMATSU
PURESTREAM
MYPROTEIN

LEGO SPEED CHAMPIONS

77244



77242



77251



77245



The F1 logo, FORMULA 1, F1, GRAND PRIX and related marks are trademarks of Formula One Licensing BV, a Formula 1 company. All other trademarks, logos and copyrights, including those of the teams featured, are the property of their respective owners. All rights reserved.

OFFICIAL LICENSEE OF FORMULA 1®

Formula 1®

77248



77249



77247



77250




1x
9327


1x
4222017


2x
6218822


4x
242001


2x
6289797


1x
6530340


2x
302101


2x
4666579


1x
6330903


4x
6302961


2x
6482746


5x
6344218


1x
6535149


1x
6535451


1x
6535148


2x
6513920


3x
302323


4x
6133721


2x
6537694


1x
6558857


1x
4609454


1x
6558916


1x
371023


1x
6560651


1x
6434831


2x
6475201


4x
6168646


3x
6439039


8x
6424674


6x
6172383


2x
307026


1x
6535272


2x
6335388


3x
6388352


1x
6539347


2x
6299338


2x
6510139


4x
4273590


1x
6141554


1x
6295295

1x
6295293

3x
6510061

1x
6141556

1x
6344427

4x
6338428

2x
6210270

1x
6344428

1x
6302313

1x
6513908

1x
6279875

4x
6539368

1x
6507846

2x
6510125

10x
6156991

2x
6513918

2x
6347310

4x
6092585

4x
6047276

1x
6178922

2x
6146220

4x
6000650

6x
6016172

5x
6020193

1x
4225201

1x
300326

1x
4200023

2x
6166859

2x
6192346

2x
6469445

2x
6508991

2x
6328095

1x
6517676

2x
6538248

1x
317626

2x
6538249

2x
6168620



2x
370526



2x
4613153



1x
371026



2x
6092570



2x
370126



2x
6439175



1x
6429334

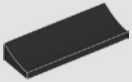

1x
6508988

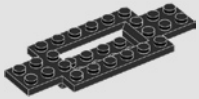

1x
4656764



2x
6249907



2x
6384643



2x
4255413



4x
4184108



1x
6214811



2x
4504374



4x
6462497



2x
6450823



1x
6510146



1x
6214812



2x
6328107



1x
6510132



2x
6094143



12x
4528981



2x
6132566



2x
6186974



3x
4502089



1x
6535267



1x
6540768



1x
6540767



2x
4252437



1x
6540063



1x
6248949



2x
6166106



2x
6271165



2x
6248078



2x
6296894



1x
6326478



6x
6510162



3x
4210633



1x
6271752

1x
6420630

1x
6167576

1x
6472255

1x
6151671

YOU COULD

WIN

Scan this QR code or go to **LEGO.COM/PRODUCTFEEDBACK** and give us your short feedback about this LEGO® set for a chance to win a cool LEGO prize.

Terms and Conditions apply*



EN: YOU COULD WIN. Terms and Conditions apply* **DE: Du könntest GEWINNEN.** Es gelten die Teilnahmebedingungen* **FR: Tu pourrais GAGNER.** Des conditions s'appliquent* **IT: Potresti VINCERE tu.** Termini e condizioni sono applicabili* **ES: Puedes GANAR.** Aplican términos y condiciones* **PT: PODERÁ GANHAR.** Aplicam-se Termos e Condições* **ZH: 轻松获奖.** 条款和条件适用* **PL: Szansa na WYGRANĄ.** Obowiązuje regulamin* **CS: Máte šanci VYHRÁT.** Platí všeobecné smluvní podmínky* **SK: Máte šancu VYHRAŤ.** Platia všeobecné zmluvné podmienky* **HU: TE IS NYERHETSZ.** Felhasználási feltételek érvényesek* **UA: ВИ МОЖЕТЕ ВИГРАТИ.** Застосовуються загальні положення та умови* **RO: Ai putea CÂȘTIGA.** Se aplică termeni și condiții* **BG: Можете да СПЕЧЕЛИТЕ.** Има определени правила и условия* **LV: Tu vari LAIMĒT.** Ir spēkā noteikumi un nosacījumi.* **ET: Sul on võimalus VÕITA.** Kehtivad tingimused* **LT: Jūs galite LAIMĖTI.** Taikomos sąlygos*

**LEGO.com/productfeedback-terms*

LEGO and the LEGO logo are trademarks of the LEGO Group.
©2025 The LEGO Group.

The Williams name, logo and car design are trademarks and/or intellectual property rights of the Williams Group and are used under licence. Williams logos, images and data © 2025 Williams. All rights reserved.

The F1 logo, FORMULA 1, F1, GRAND PRIX and related marks are trademarks of Formula One Licensing BV, a Formula 1 company. All rights reserved.

OFFICIAL LICENSEE OF FORMULA 1®

6566095