Digispark Rev.3 Kickstarter Datenblatt

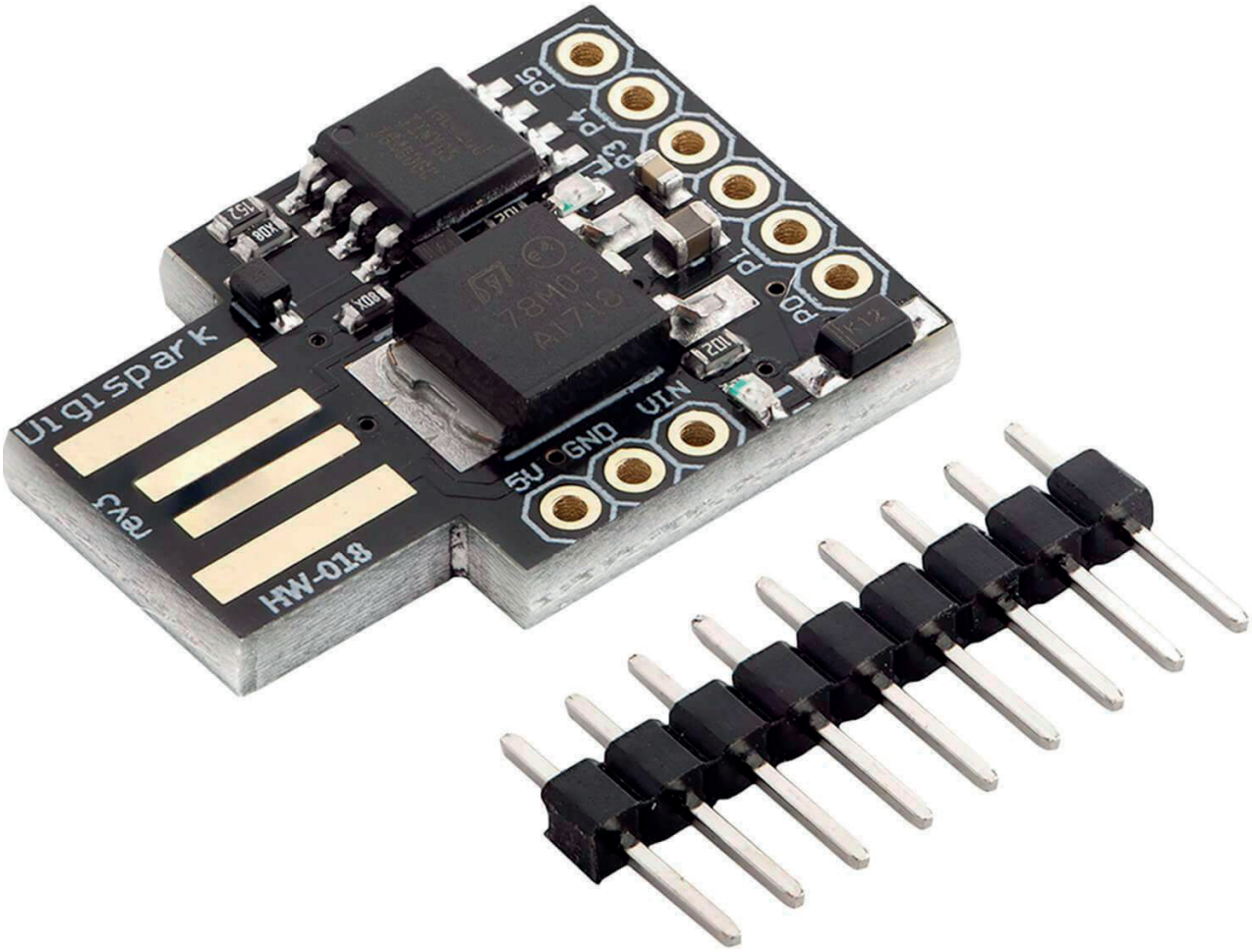

Content:

1. Specifications
2. ATTiny Chip Features
3. Pinout
4. Schematic

1. Specifications

Operating Voltage	2.7V-5.5V
External Power Supply Voltage	6V - 12V (VIN pin)
Operating Current	300μA
Operating Temperature	-40°C to 85°C
Input/Output pins	6 Multipurpose pins (analog, digital)
Interface Support	SPI, I^2C
Memory Capacity	8kB
Dimensions	20mm x 19mm x 6mm (0.8in x 0.7in x 0.2in)

The Digispark has two on-board LEDs. One is for power indication, and the other is connected to the pin 1 (PB1).

2. ATTiny Chip Features

• High Performance 8-bit microcontroller
• 8kB In-System Programmable Program Memory Flash
• 512B In-System Programmable EEPROM
• 512B Internal SRAM
• 8-bit Timer/Counter with prescaler and two PWM channels
• 8-bit High speed Timer/Counter with separate prescaler, two high frequencies PWM outputs
• USI – Universal Serial Interface

• 10-bit ADC:
ADC noise reduction
4 single ended channels
2 differential ADC channel pairs (with programmable gain 1x, 20x)

• Programmable Watchdog timer with separate on-chip oscillator
• In-system programmable via SPI port
• External and internal interrupt sources
• Internal calibrated oscillator
• Enhanced Power-on Reset circuit
• Low power idle and power-down modes
• Six programmable I/O lines
• Operating voltage: 2.7 – 5.5V

• Low power consumption:
active mode: 1MHz – 1.8V, 300uA
power-down mode: 0.1uA at 1.8V

3. Pinout

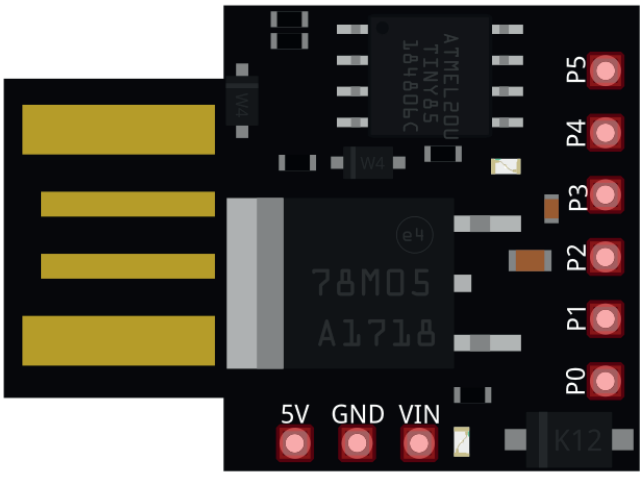

5V GND 6-16V

PB5/PCINT5/ADC0/RESET

PB4/PCINT4/ADC2/USB - /PWM4

PB3/PCINT3/ADC3/USB +

PB2/PCINT2/ADC1/SCLK/SCL/INT0

PB1/PCINT1/PWM1/MISO

PB0/PCINT0/PWM0/MOSI/SDA

The Digispark has total of 9 pins and USB connector. There are 6 GPIO pins, 3 additional pins for external power supply and the USB (OTG - On The Go type) connector. Two pins (2 and 3) are connected to the USB port data pins.
To utilise pins (2, 3) as GPIO pins, USB must be disabled.
The pins with a (PB) designations on the pinout image are the actual pin names that are used when addressing the pins from the code in the Arduino IDE.

To use the RESET pin to reset the microcontroller, the pin has to be driven LOW. To do this safely, use the push down button with pull down resistor connected between the RESET pin and GND. By default the RESET pin I/O function is disabled by the micronucleus bootloader code and as such can not be used as the GPIO pin, only as RESET pin.

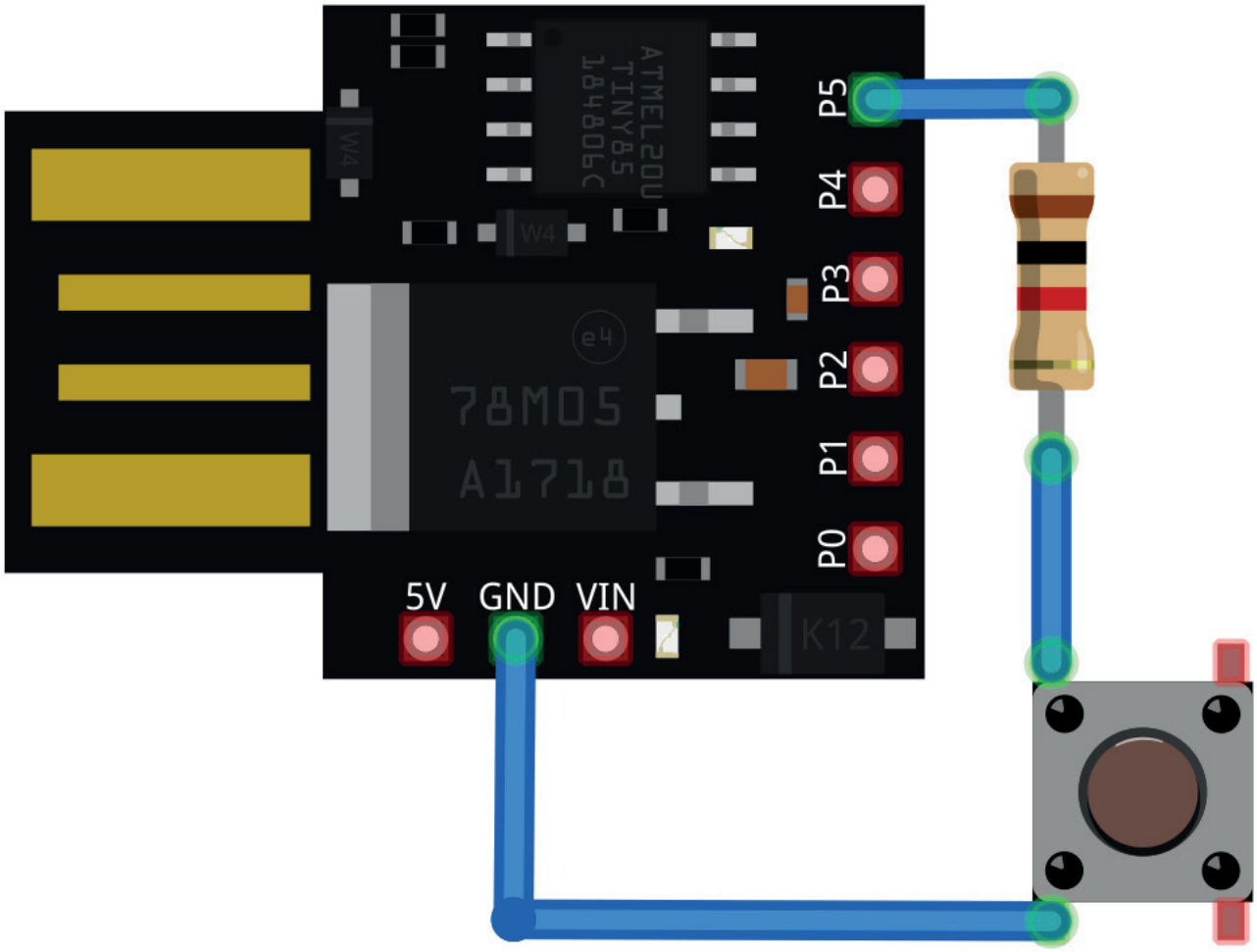
P5
P4
P3
P2
P1
P0
5V
GND
VIN
ATMEL20U
TINY85
184806C
78M05
A1718
W4
K12

4. Schematic

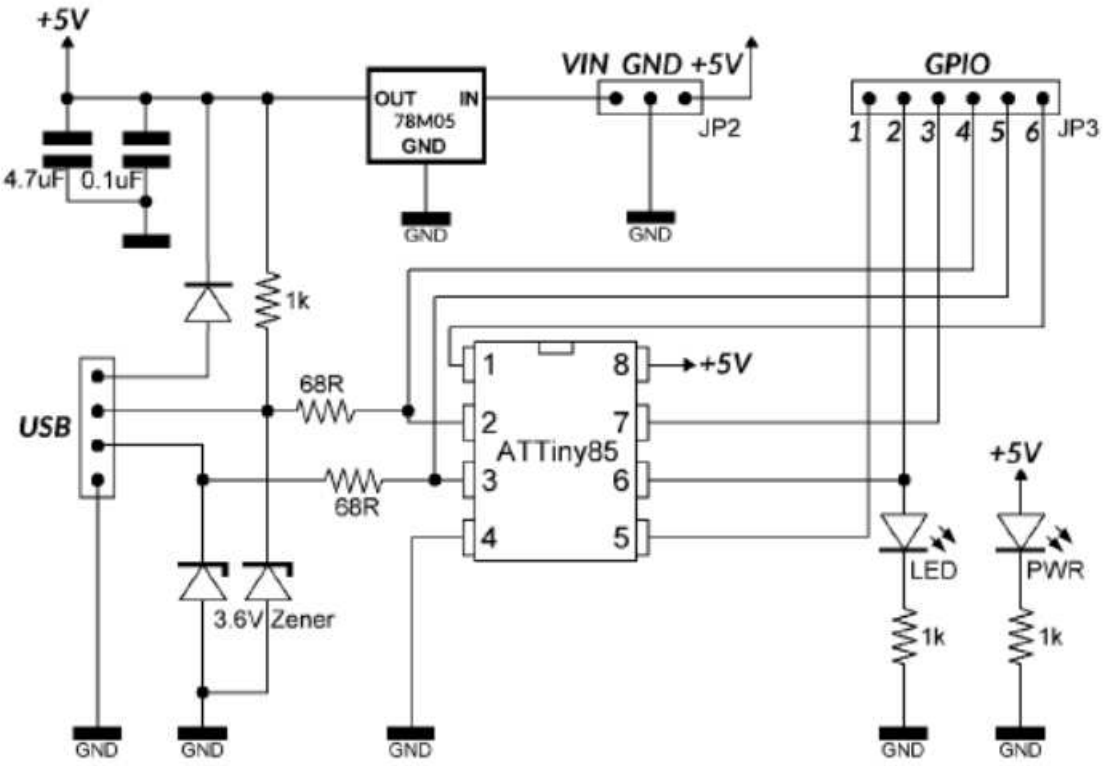

The schematic diagram shows the simplicity of the Digispark circuit. The circuit consists of an ATTiny85 chip, voltage regulator, diodes, few resistors, capacitors and LEDs.

The Digispark has 3 additional pins (JP2) for external power supply, the VIN voltage input pin and it can be supplied with voltages from 6V to 12V. The voltages are regulated by an on-board 5V voltage regulator. The voltage regulator current limit is 500mA.

The 5V pin is a voltage output pin and can supply other peripheral devices connected to Digispark.

Warning: The overall current consumption should not exceed the limit (500mA) of the voltage regulator, otherwise damage may occur!

AZ-Delivery

Ihr Experte für Mikroelektronik!

For top quality microelectronics, we are your go to. We provide an array of application examples, full installation guides, eBooks, libraries, and all-round assistance. AZ-Delivery, your microelectronics expert!