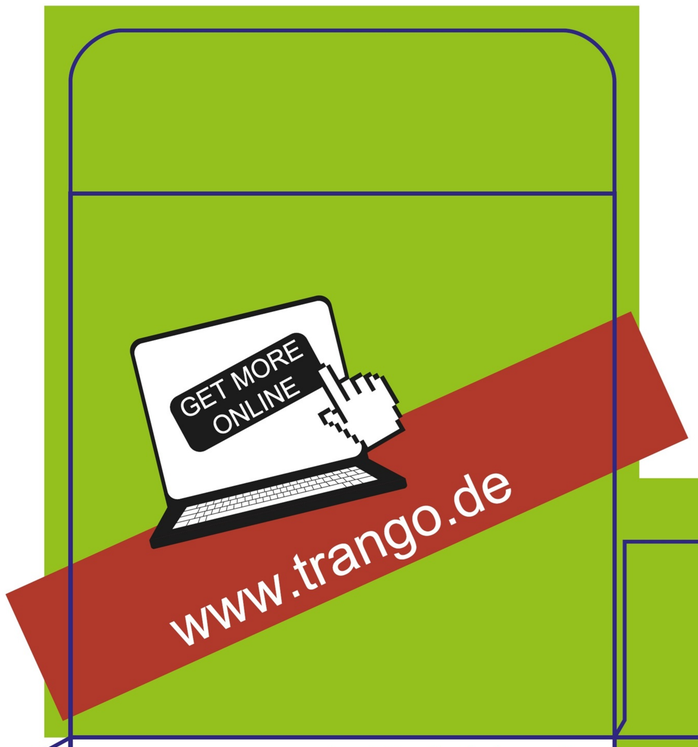

TRANGO

LED-Modul

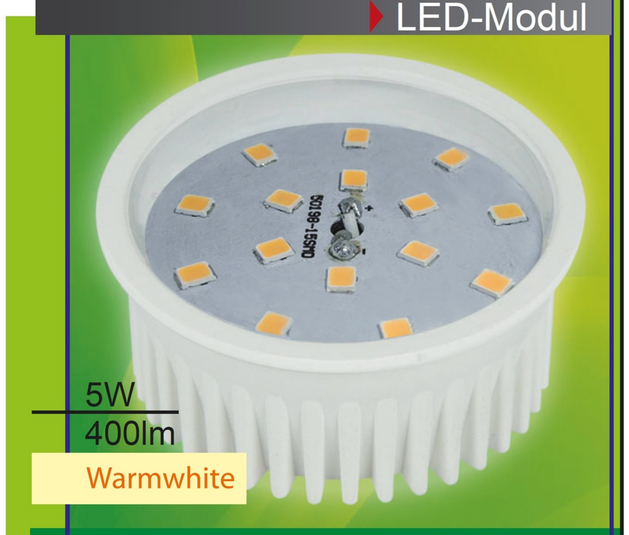

TGMO15

ENERG

Trango

MO15

A
B
C
D
E
F
G

F

3000K	warmwhite
400 Lumen	
RA>=80	
Volt	
230V~	
Wattage	
5 Watt±5%	
Start Time	
<0.5s(100%)	
Life time	
≥20.000 h	
ON/OFF	
≥15.000x	

TRANGO

LED-Modul

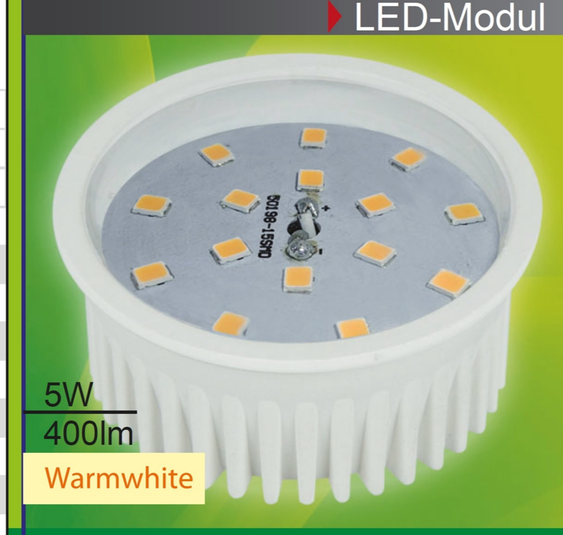

TGMO15

TRANGO

LED-Modul

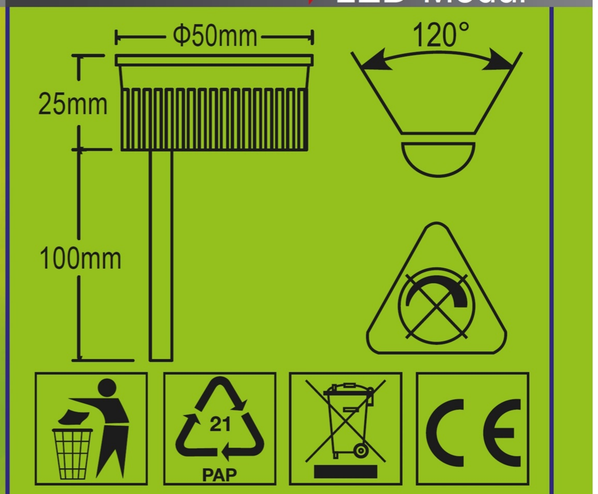

Trango GmbH
Jakobsberg 1
D-59929 Brilon
www.trango.de