ROUND TRAMPOLINE ENCLOSURE INSTRUCTIONS

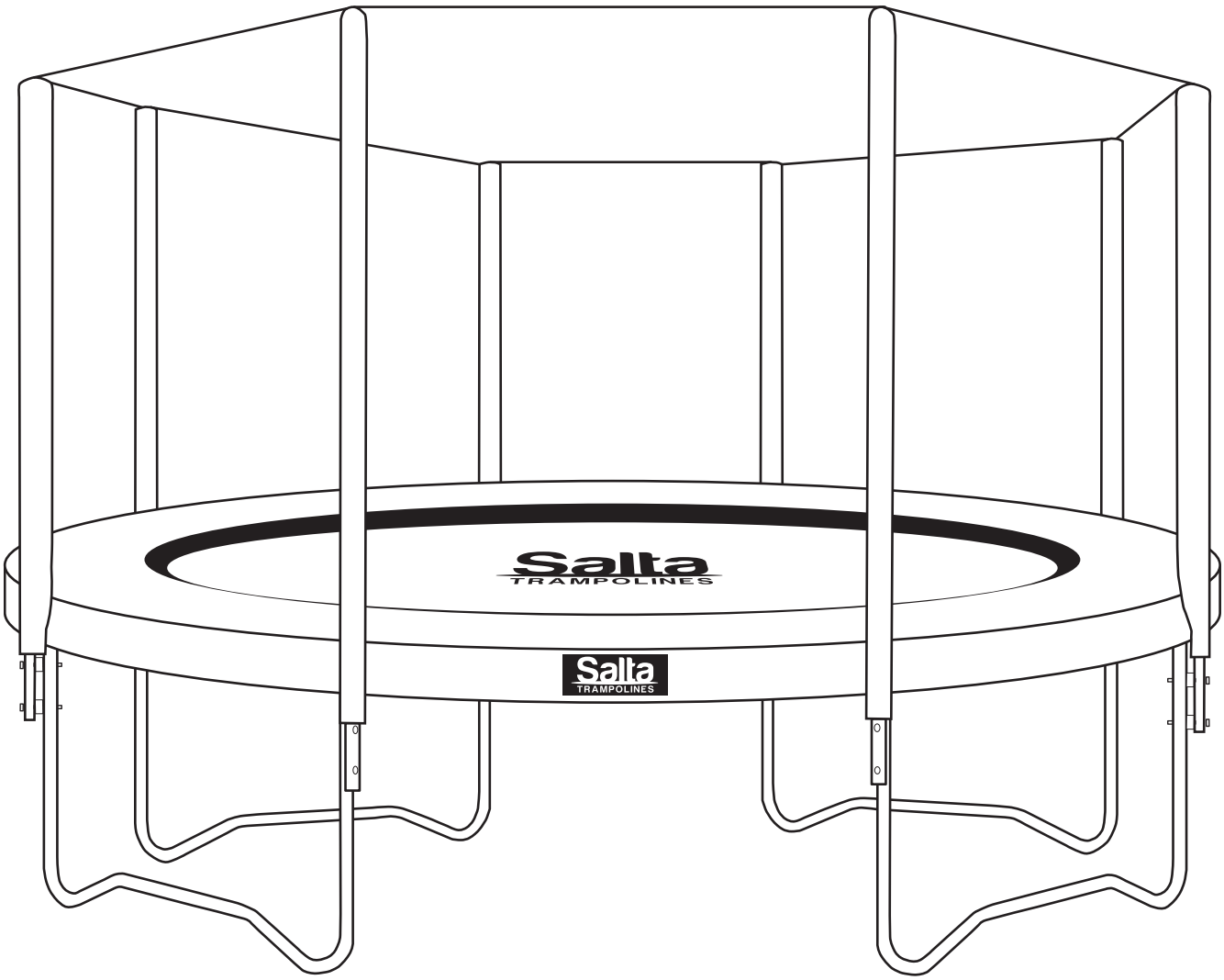

TRAMPOLINE SPECIFICATIONS:

TRAMPOLINE SIZE	◯ 183cm ◯ 244cm ◯ 366cm ◯ 213cm ◯ 305cm ◯ 427cm
AMOUNT OF LEGS	◯ 3 legs ◯ 4 legs

WWW.SALTATRAMPOLINES.COM

ASSEMBLY INSTRUCTIONS FOR PROTECTIVE NET

1. PACK CONTENTS

FIG.	PARTS NAME	183cm (3Legs) 6Pole	213cm (3Legs) 6Pole	244cm (3Legs) 6Pole	305cm (3Legs) 6Pole	366cm (4Legs) 8Pole	427cm (4Legs) 8Pole
1	LOWER STEEL TUBE	6PCS	6PCS	6PCS	6PCS	8PCS	8PCS
2	UPPER (PADDED) STEEL TUBE	6PCS	6PCS	6PCS	6PCS	8PCS	8PCS
3	SPACER	12PCS	12PCS	12PCS	12PCS	16PCS	16PCS
4	SCREW SET	12SET	12SET	12SET	12SET	16SET	16SET
5	ENCLOSURE NET	1PC	1PC	1PC	1PC	1PC	1PC
6	Hex Key	1PC	1PC	1PC	1PC	1PC	1PC
7	Spanner	1PC	1PC	1PC	1PC	1PC	1PC

Note: If leg and lower steel tube amount homology, please assemble space interval

2. DIAGRAM FOR PARTS

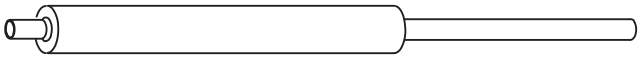

1

2

(these tubes have a padded sleeve for protection of user in case of impact in use – please do not remove!)

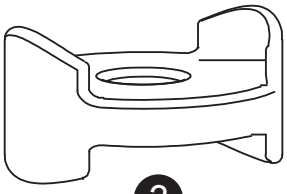

3

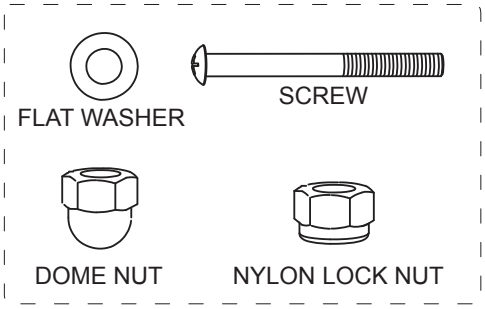

4

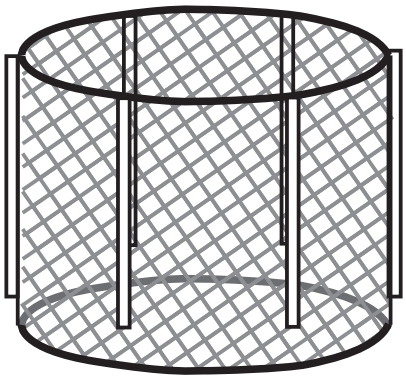

5

6

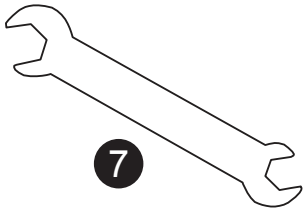

7

⚠ WARNING

This enclosure is to be used only in connection with certain trampolines.
Read and follow all warnings and instructions

Salta TRAMPOLINES

3. ASSEMBLY

Step 1:

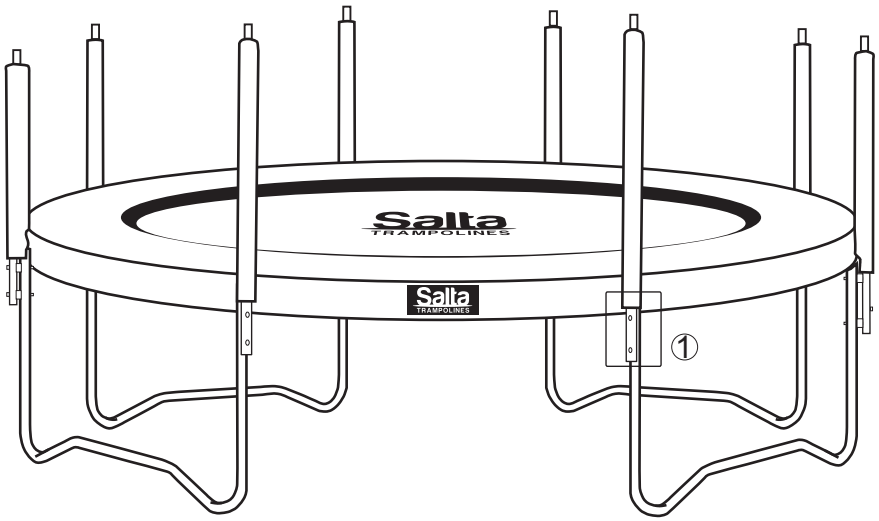

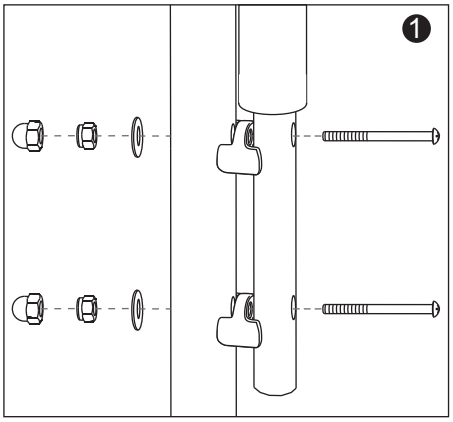

Using the Spacer take Screw, Flat Washer ,Nylon Lock Nut & Dome Nut and connect to the frame as shown in diagram, In order repeat this all.

Ensure all nuts and bolts are securely tightened .

Step 2:

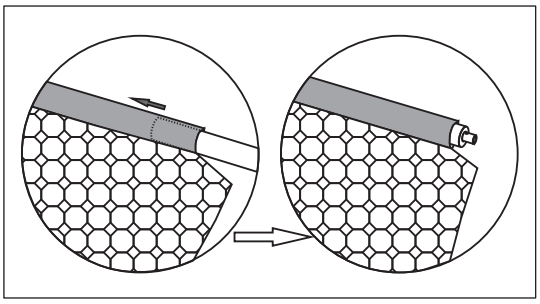

Insert the Upper Steel Tubes (2) into the sleeves of the enclosure net (5) as shown

Note: Ensure end of steel tube is visible as shown.

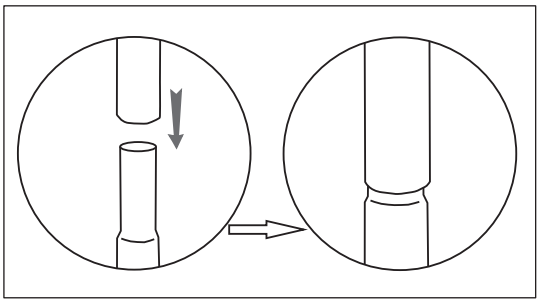

Locate Upper Steel Tube (2) over Lower Steel Tube (1).

Repeat for all poles.

Step 3:

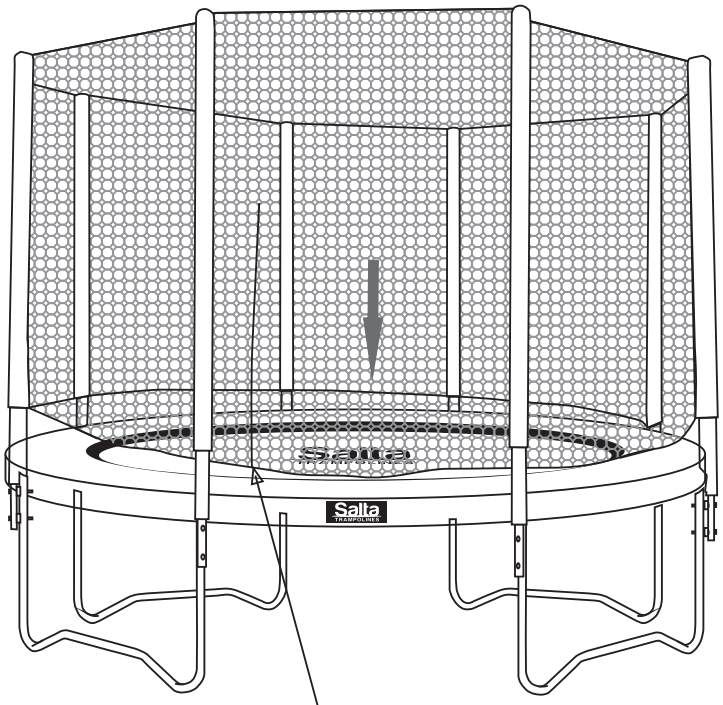

Opening with zipper
Between the open trampoline frames/legs

Working around the trampoline gradually ease the enclosure net(5)
to the level of the trampoline pad.

Step 4:

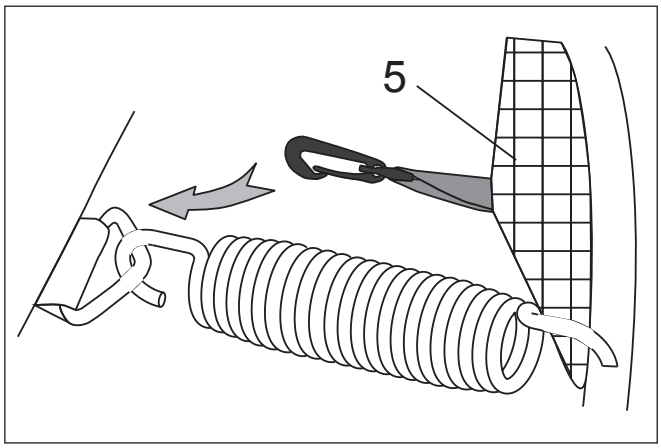

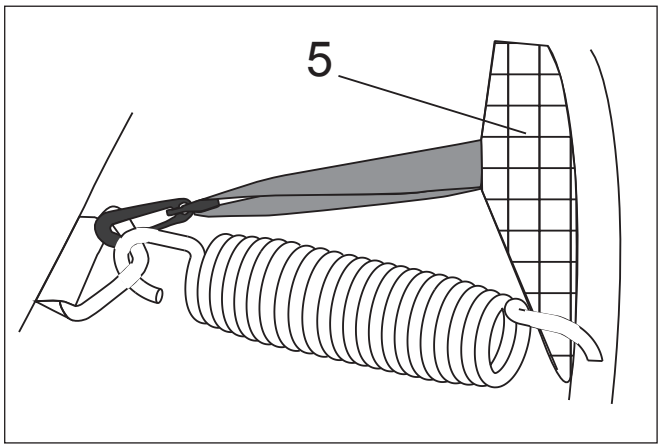

Lastly, take each elasticated strap (along the bottom edge of the net), pass wrap around the trampoline frame fasten using the hook/ring. Fix the hook into ring in order

⚠ WARNING

You should go back now and stretch all attachment hooks tight and double check to see whether you have fastened the jigs use the screw sets or not, so the safety net stands stiff. Otherwise, the safety net will not function properly. Then finish assembling.

WARNING:
1. Adequate overhead clearance is essential. A minimum of 24 ft,and a clearance of 2m around the perimeter of the trampoline. from ground level is recommended. Provide clearance for wires, tree limbs and other possible hazards.

2. Lateral clearance is essential. Place the trampoline and trampoline enclosure away from walls, structures, fences, and other play areas. Maintain a clear space on all sides of the trampoline and trampoline enclosure.

3. Place the trampoline and trampoline enclosure on a level surface before use.

4. Use the trampoline and trampoline enclosure in a well-lighted area. Artificial illumination may be required for indoor or shady areas.

5. Secure the trampoline and trampoline enclosure against unauthorized and unsupervised use.

6. Remove any obstructions from beneath the trampoline and trampoline enclosure.

7. The trampoline enclosure is only to be used as an enclosure for a trampoline and the trampoline must be of the appropriate size as covered by the specific enclosure.

8. The owner and supervisors of the trampoline are responsible for making all users aware of practices specified in the use instructions.

WARNING:
1. DO NOT attempt or allow somersaults on the trampoline. Landing on the head or neck can cause serious injury, paralysis, or death even when landing in the middle of the bed.

2. Do not allow more than one person inside the trampoline enclosure. Use by more than one person at the same time can result in serious injuries.

3. Use trampoline enclosure only with mature, knowledge supervision. Care and Maintenance Instructions: Inspect the trampoline enclosure before each use and replace any worn, defective or missing parts. The following conditions could represent potential hazards:

a. Missing, improperly positioned, or insecurely attached barrier or enclosure support system (frame) padding and pole caps.

b. Punctures, frays, tears or holes worn in the barrier or support system (frame) padding. c. Deterioration in the stitching or fabric of the barrier or support system (frame) padding. d. Bent or broken support system (frame).
e. Sagging barrier.

f. Sharp protrusions on the support (frame) or suspension system.

IMPORTANT
Inspect the trampoline and enclosure before each use. Disassemble the trampoline and/or enclosure immediately if any unsafe condition exists.

Do not allow use of the trampoline or enclosure until the hazard has been corrected.

WARNING
ANCHOR YOUR TRAMPOLINE & ENCLOSURE -
If you live in an area with the potential for high winds or gusts of wind we advise that you anchor your trampoline and enclosure system firmly to the ground by the top rail of the trampoline. Your trampoline and enclosure could be carried off by a strong wind and cause damage to the unit itself or cause other property damage.

After assembling and inspecting your trampoline and enclosure, and before permitting its use,ensure that the trampoline is on a firm, level surface and that every leg is in contact with and firmly supported by this surface. It is the responsibility of the owner and/or supervisor of this trampoline to ensure unit is correctly assembled, placed and maintained.