BATTERY WARNING

eable batteries are not to be recharged;
e batteries are only to be charged under
ion;
batteries are to be removed from the
g charged;
of batteries or new and used batteries
ed;
e inserted with the correct polarity;
es are to be removed from the toy;
als are not to be short-circuited.
e charged by persons at least 8

new batteries.
atteries,standard(carbon-zinc)

reference since it contains

TRACTOR BATTERY ILLUSTRATE

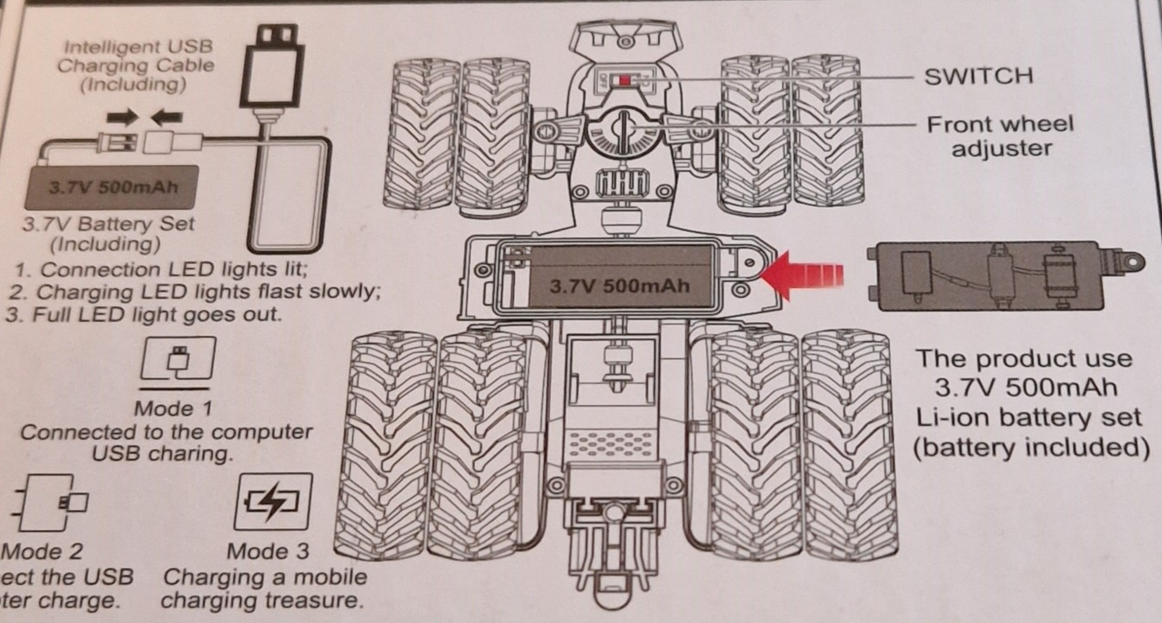

CONTROLLER BATTERY ILLUSTRATE

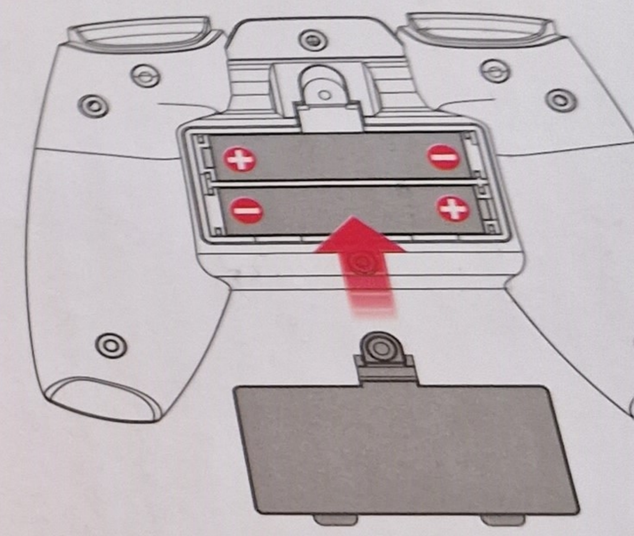

Install 2 x 1.5V "AAA"Batteries
(Not included)

NG

emote control.
e control and

the battery

witch

ON

ind
rol

WARNING:

NOT SUITABLE FOR CHILDREN UNDER 3 YEARS DUE TO SMALL PARTS

0-3

هشدار! برای کودکان زیر ۳ سال
مناسب نیست . دارای قطعات کوچک است

تحذير : غير ملائم للاطفال تحت ثلاثة (٣) سنوات بسبب
القطعاة الصغيرة

COUNTRY OF ORIGIN:CHINA

بلد المنشأة: الصين

صنعت وفقا للمواصفات والمعايير العالمية

Tested according to international standards

No.6633B

No.6633K

0-3

FALTSCHACHTEL RECYCLINGFÄHIG

UK CA

Specifications colors & contents may vary from illustrations.

WARNING:

CHOKING HAZARD - small parts,
Not for children under 3 years.

MADE IN CHINA

SHANTOU CHENGNONG TOY INDUSTY CO.,LTD
Donghu Industrial Avenue, Fengxiang Street, Chenghai District, Shantou City, Guangdong Province, China