DAB

MAKING WATER EASY

esybox pop

ELECTRONIC PRESSURISATION SYSTEM

PERFORMANCE RANGE

The performance curves are based on kinematic viscosity values = 1 mm²/s and density equal to 1000 kg/m³. Curve tolerance according to ISO 9906.

GRAPHIC SELECTION TABLE

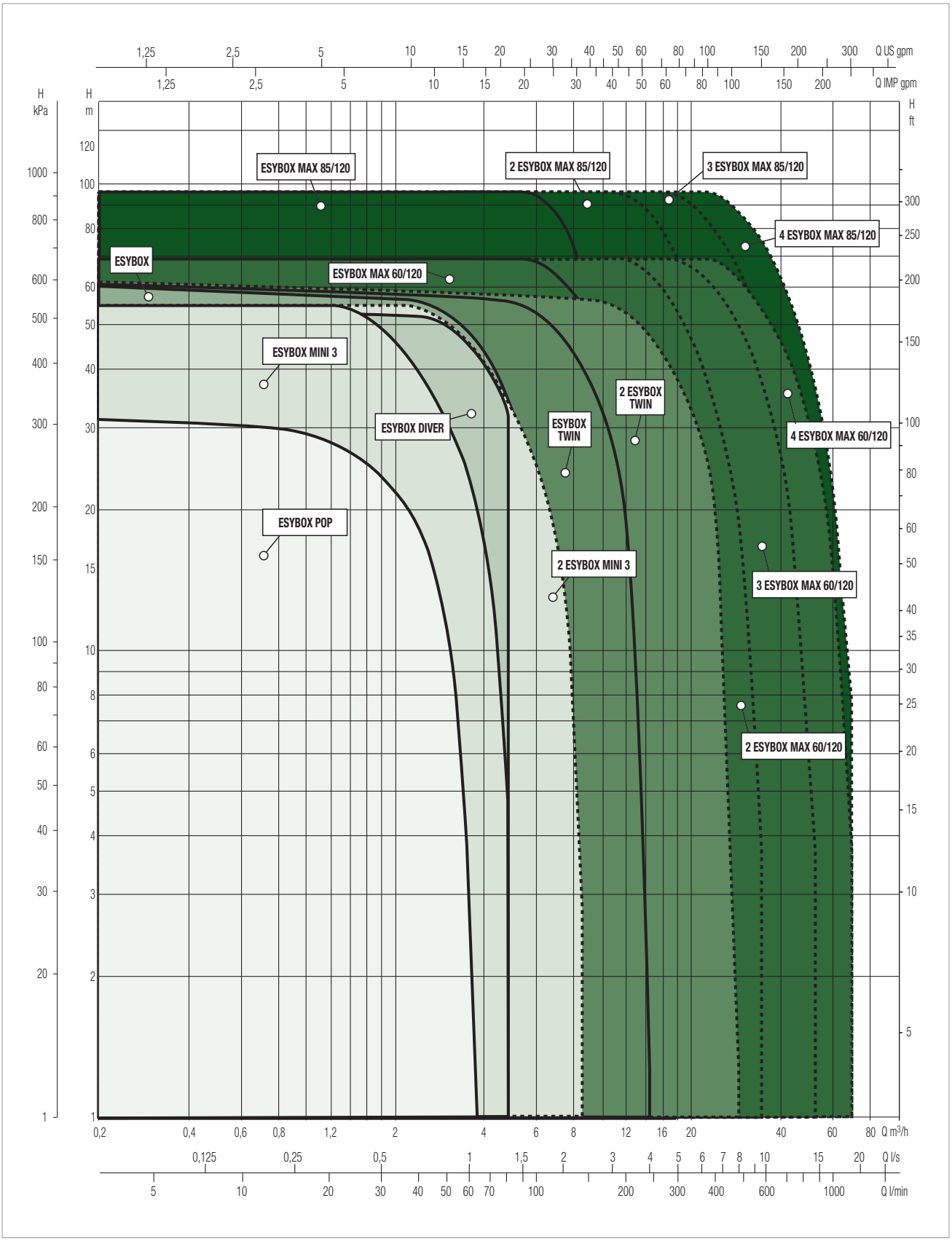

ESYBOX POP

ELECTRONIC PRESSURISATION SYSTEM

INTEGRATED
CONNECTIVITY

FOR PROFESSIONALS
AND END USERS

TECHNICAL DATA

Flow rate: up to 3.9 m^3/h
Head: 32 m
Type of pumped liquid: clean, free of solids and abrasive substances, non-viscous, non-aggressive, non-crystallised, and chemically neutral
Liquid temperature range: 5 °C to +50 °C
Maximum ambient temperature: +50°C
Maximum working pressure: 6 bar / 600 kPa
Motor protection rating: IPX5
Motor insulation class: F
Impeller material: technopolymer
Single-phase power supply: 230 V 50 Hz
Power cord length and plug type: 1,5 m
Installation options: can be installed vertically or wall-mounted using a dedicated accessory
Certifications: WRAS, ACS, NSF

This electronic pressurisation system is designed for small residential environments.
It features sound-absorbing materials and a water-cooled permanent magnet motor, ensuring quiet operation, which makes it particularly suitable for home use.
The professional performance of this device is ensured by its advanced components, which include: an anti-cycling feature, which detects leaks by monitoring the frequency of starts and stops; an automatic shut-off mechanism that activates in the event of dry running; an anti-freeze system - to prevent ice formation in the hydraulic components, the pump activates when temperatures drop below 5°C; a motor-protection technology to prevent issues from prolonged inactivity.
The adjustable connections facilitate quicker, easier, and more flexible installation.
Integrated connectivity enables users to configure settings via a smartphone and access cloud services without the need for additional accessories. Additionally, the remote control uses H_2D technology to view and manage comfort features and parameters.

PUMP DESIGN FEATURES

Sound-absorbing ABS protective casings. Technopolymer impellers. Non-return valve with integrated temperature, flow, and pressure sensors.

MOTOR DESIGN FEATURES

Permanent magnet motor cooled by the pumped liquid, encased in a stainless steel jacket for enhanced durability.

ELECTRONICS FEATURES

The inverter-controlled permanent magnet motor ensures significant energy savings. Its inverter feature not only enhances energy efficiency but also provides protection against water hammer. Integrated protections: dry running, excessive current, abnormal voltage, overheating, freezing, stalling, and anti-cycling. Built to Italian standards CEI 2-3 and CEI 61-69 (EN 60335-2-41). The device includes a guided procedure for online connection, enabling easy configuration and remote or local adjustment of all parameters through an app. Users can simplify the setpoint adjustment directly from the pump and view the current status, alarm history, and consumption data via the APP.

DAB PUMPS reserves the right to make modifications without notice.

ESYBOX POP - ELECTRONIC PRESSURISATION SYSTEM

Pumped liquid temperature range: from 5°C to +50°C

Maximum operating pressure: +50°C

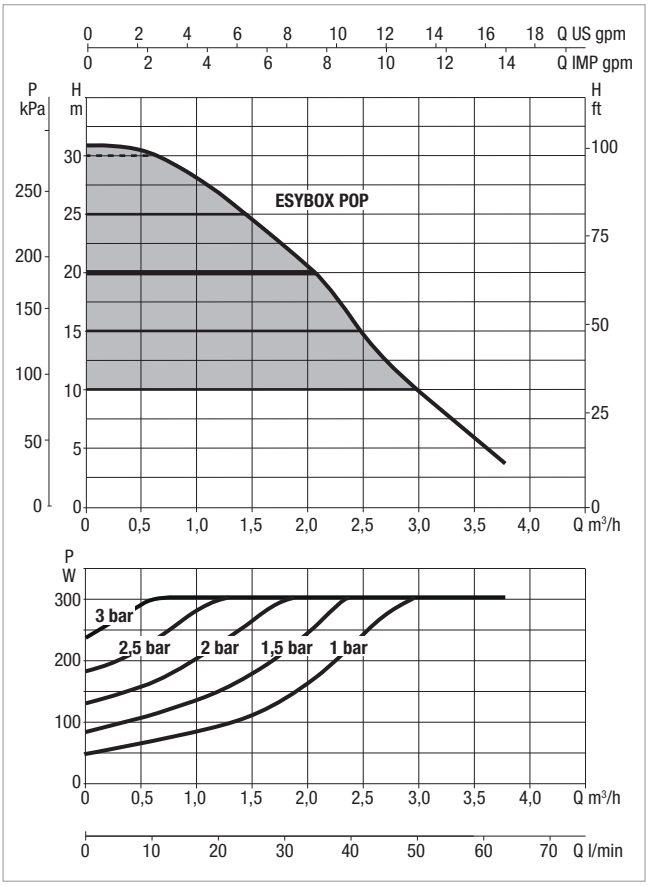

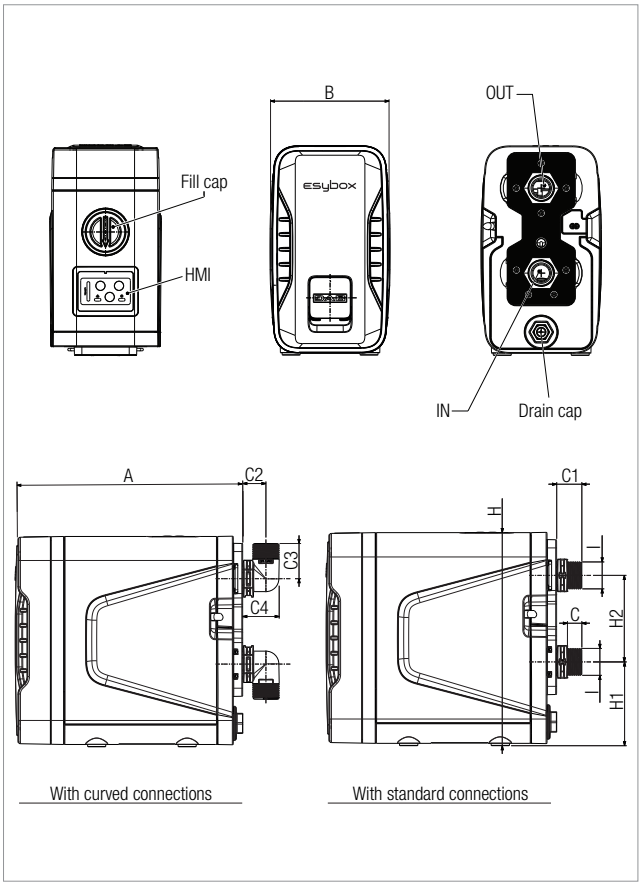

The performance curves are based on kinematic viscosity values = 1 mm²/s and density equal to 1000 kg/m³. Curve tolerance according to ISO 9906.

Two pairs of fittings will be supplied, both elbow and standard.

MODEL	Q=m³/h	0	0,6	1,2	1,8	2,4	3	3,8
	Q=l/min	0	10	20	30	40	50	63
ESYBOX POP	H (m)	32	31	26,8	21,6	16	10,1	2,7

MODEL	ELECTRICAL DATA				
	N° IMPELLERS	POWER INPUT 50/60 Hz	P1 MAX		In A
			kW	HP	
ESYBOX POP	2	220-240 V	0,3	0,4	1,5A

MODEL	A	B	C	C1	C2	C3	C4	H	H1	H2	I Ø	DNA	DNM	PACKING DIMENSIONS			WEIGHT Kg
														L/A	L/B	H	
ESYBOX POP	226.5	120.3	14	24.7	23	35	36.2	209.3	82.3	85	3/4"	3/4"	3/4"	250	200	250	4,4

H_2D DIGITAL SERVICE

THE SMART PLATFORM FOR MANAGING DAB DEVICES REMOTELY

H_2D IS THE DAB PLATFORM - AVAILABLE ON MOBILE AND DESKTOP - THAT PAIRS WITH LATEST-GENERATION DAB DEVICES TO SHOW YOU WHAT'S GOING ON INSIDE YOUR SYSTEMS.

It allows you to configure your pump and optimise its operation remotely, saving time, resources and money.

Ideal for anyone seeking to future-proof their business with solutions designed to improve processes, offer more service, and be environmentally responsible.

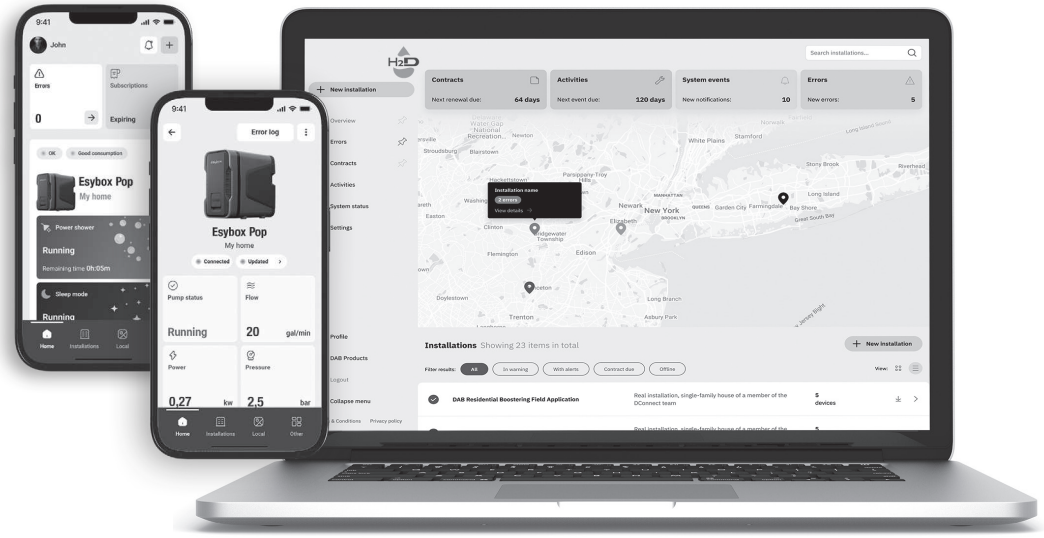

H_2D FOR PROFESSIONALS

H_2D simplifies and streamlines work routines, allowing for precise configuration of all parameters.

SEE THE FUTURE OF YOUR BUSINESS THROUGH A NEW LENS

Desktop and mobile solutions work together seamlessly. With user-friendly access on your smartphone, it's never been easier to communicate with pumps on site or keep an eye on your systems from anywhere. From your desktop, you can dive deeper into data analysis. You can easily enhance workflow, improve customer service, and grow your business.

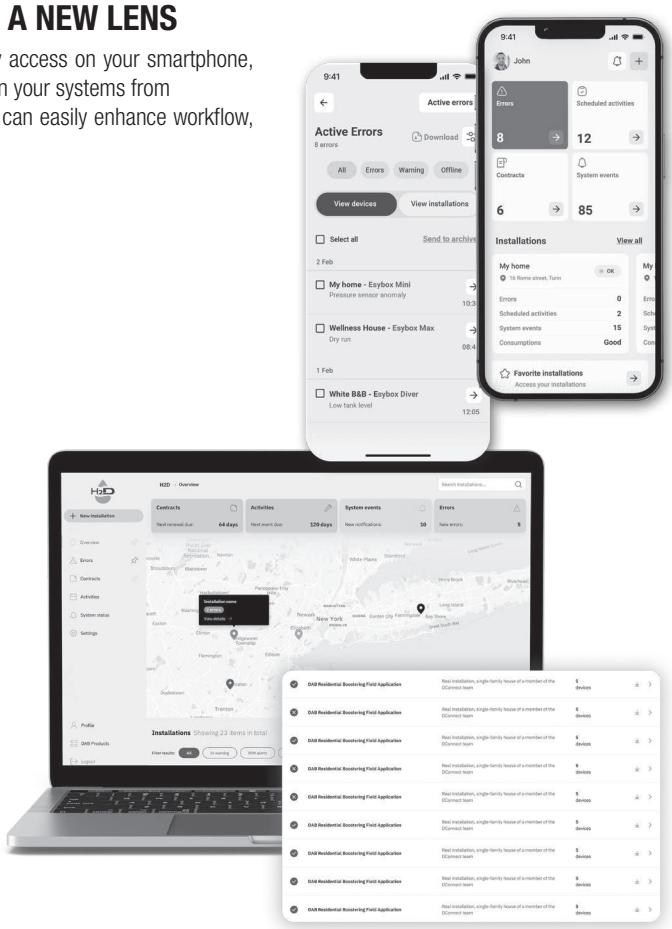

OPTIMISE TIME AND WORK

H_2D allows systems to be controlled remotely and, where needed, work on site is easier to plan.

PROBLEM FIXED FIRST TIME, EVERY TIME

H_2D provides all the info you need to prepare the job beforehand for a quick and permanent fix, so the technician can get everything done in one go.

LITTLE OR NO DISRUPTION

Remote monitoring allows you to address potential issues and prevent disruptions.

MORE SERVICE AND LESS URGENT CALLOUTS = INCREASED PROFIT

With remote monitoring, we offer a 24/7 service that includes preventive maintenance services, helping to avoid emergencies.

SATISFIED CUSTOMERS

With parameters optimised remotely, the system ensures consistently smooth operation.

FROM DCONNECT TO H_2D

H_2D replaces and improves on DConnect. Latest generation DAB products connect effortlessly to H_2D.

DAB PUMPS reserves the right to make modifications without notice.

H_2D DIGITAL SERVICE

THE SMART PLATFORM FOR MANAGING DAB DEVICES REMOTELY

H_2D FOR HOMEOWNERS AND END USERS

H_2D is a tool designed to help you manage water use effectively, optimising consumption, costs, and comfort.

OVERVIEW

With H_2D monitoring your water usage and device status in real-time is easy and convenient. If any issues arise, you can contact support immediately, regardless of your location.

SMART HOME. TALK TO ESYBOX POP!

You can activate comfort modes by speaking to voice assistants like Alexa and Google Home. For example, you can say, “Alexa, activate Power Shower.”

COMFORT FUNCTIONS

You can access these functions through an app, allowing you to customise the system’s performance and features to balance comfort and energy consumption.

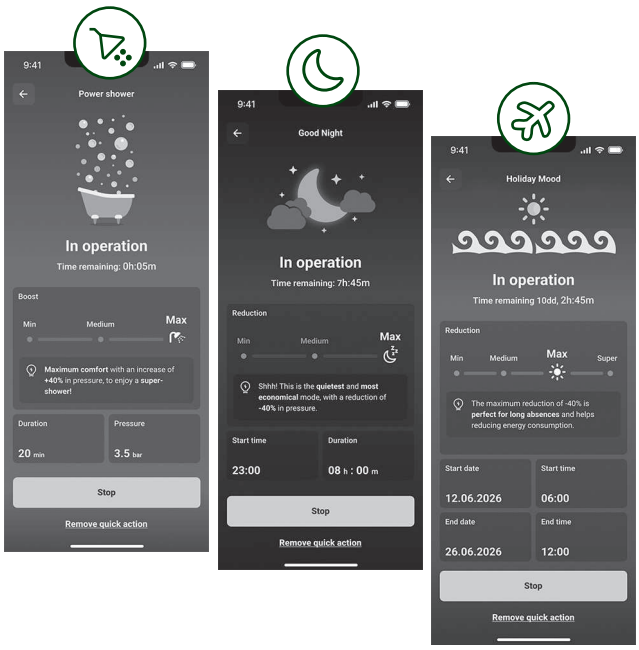

POWER SHOWER

Turn a regular shower into a “power shower”: this feature increases water pressure just for the time it takes to shower, while reducing usage for the rest of the day.

GOOD NIGHT

During the night or for a quick nap, you can activate sleep mode, which switches the already quiet pump to a whisper-quiet operation, further reducing energy usage.

HOLIDAY MOOD

This important feature helps minimise device activity, thereby saving energy during vacations or extended periods when you are away.

INSTALL H_2D NOW!

GET IT ON Google Play

Download on the App Store

LEARN MORE
H_2D.COM/EN

HOW TO USE H_2D

DAB PUMPS reserves the right to make modifications without notice.

DAB MAKING WATER EASY

	DESCRIPTION
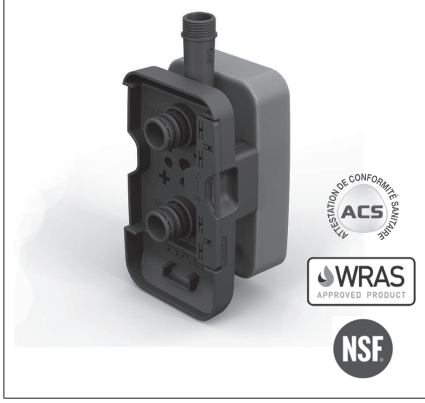	**ESYDOCK POP** Thanks to its adjustable connections, the dock fits any plumbing configuration, allowing for faster, easier, and more flexible installation. It comes with all the interfaces required for connection to the system. It also includes a wall mounting kit and a bypass connection. Also available in DW version with second integrated pressure sensor. Can be connected directly to the existing domestic water supply where permitted.

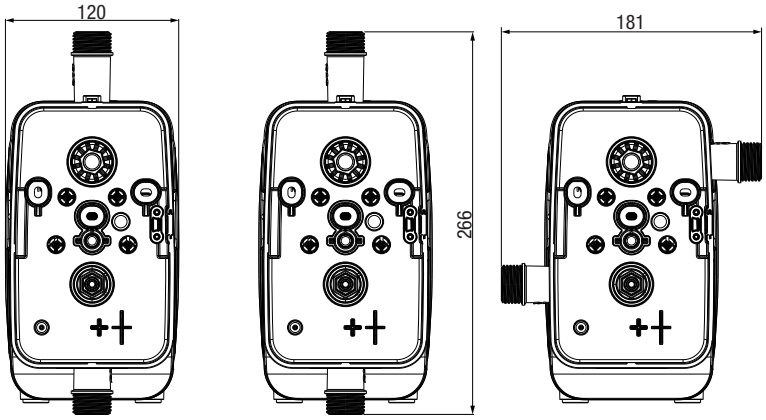

OPTION FOR INSTALLATION WITH ESYDOCK POP

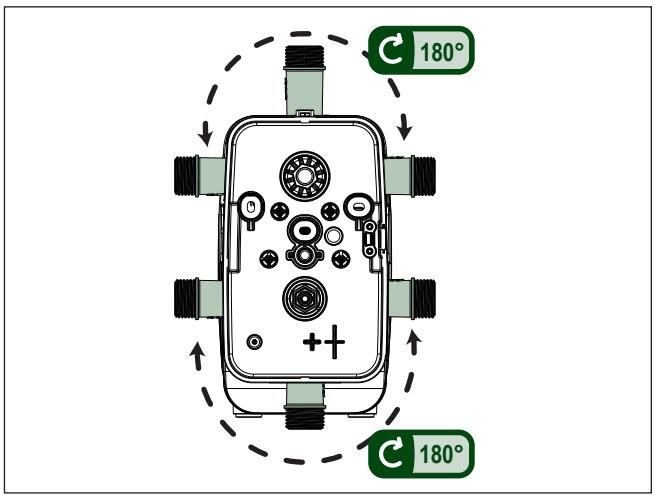

	DESCRIPTION
	ESYWALL POP Wall-mounting kit including bracket, screws, and plugs.

NOTES

MAKING WATER EASY
Via Marco Polo, 14 - 35035 Mestrino (PD) Italy - Tel. +39.049.5125000 - Fax +39.049.5125950
www.dabpumps.com

DNA PUMPS SELECTOR

On-line selection tool

DAB PUMPS LTD.
Unit 6 Gilberd Court
Newcomen Way, Severalls Park
CO4 9WN
Colchester
ordersuk@dwtgroup.com
Tel. +44 0333 777 5010

DAB PUMPS IBERICA S.L.
Calle Verano 18-20-22
28850 - Torrejón de Ardoz - Madrid
Spain
Info.spain@dwtgroup.com
Tel. +34 91 6569545

DAB PUMPS DE MÉXICO, S.A. DE C.V.
Av Amsterdam 101 Local 4
Col. Hipódromo Condesa,
Del. Cuauhtémoc CP 06170
Ciudad de México
Tel. +52 55 553 2621

DAB PUMPS BV
'tHofveld 6 C1
1702 Groot Bijgaarden - Belgium
info.belgium@dwtgroup.com
Tel. +32 2 4668353

DAB PUMPS HUNGARY KFT.
H-8800
Nagykanizsa, Buda Ernő u.5
Hungary
Tel. +36 93501700

DAB PUMPS SOUTH AFRICA (PTY) LTD
Twenty One industrial Estate,
16 Purlin Street, Unit B, Warehouse 4
Olifantsfontein -1667 - South Africa
info.sa@dwtgroup.com
Tel. +27 12 361 3997

DAB PUMPS B.V.
Statenlaan, 4
5223 LA, 's-Hertogenbosch
Nederland
info.nl@dabpumps.com
Tel. +31 416 387280

DAB PUMPS POLAND Sp. z o.o.
Ul. Cieślewskich 35K
03-017 Warszawa - Poland
sprzedaz@dabpumps.com.pl

DAB PUMPS (QINGDAO) CO. LTD.
No.10 Xindong Road
Jiulong Town,
Jiaozhou City
266319 Qingdao (Shandong) - China
sales.cn@dwtgroup.com
Tel. +86 400 186 8280

DAB PUMPS FRANCE SAS
Tour Ariane, Paris la Défense 9
5, Place de la Pyramide
92800 Puteaux - France
info.fr@dabpumps.com
Tel. +33 (0)6 79 63 05 46
+33 (0)7 89 01 53 35

DAB PUMPS INC.
3226 Benchmark Drive
Ladson, SC 29456 - USA
info.usa@dwtgroup.com
Tel. 1- 843-797-5002
Fax 1-843-797-3366

DAB PUMPS OCEANIA PTY LTD
426 South Gippsland Highway,
Dandenong South VIC 3175 – Australia
info.oceania@dwtgroup.com
Tel. +61 1300 378 677

DAB PUMPS GMBH
Am Nordpark 3
D - 41069 Mönchengladbach - Germany
info.germany@dwtgroup.com
Tel. +49 2161 47388-0
Fax +49 2161 47388-36

DAB PUMPS CANADA INC.
333 Bay Street, Suite 4600, Toronto,
Ontario, M5H 2S5, - Canada
orders@dwtgroup.ca
Tel. 1-833-322-7867

PT DAB PUMPS INDONESIA
Satrio Tower lantai 26
unit C-D, Jl. Prof. Dr. Satrio Kav. C4,
Kel. Kuningan Timur, Kec. Setiabudi, Kota Adm.
Jakarta Selatan, Prov. DKI Jakarta. - Indonesia
Tel. +62 2129222850

50250248 - 02/2026