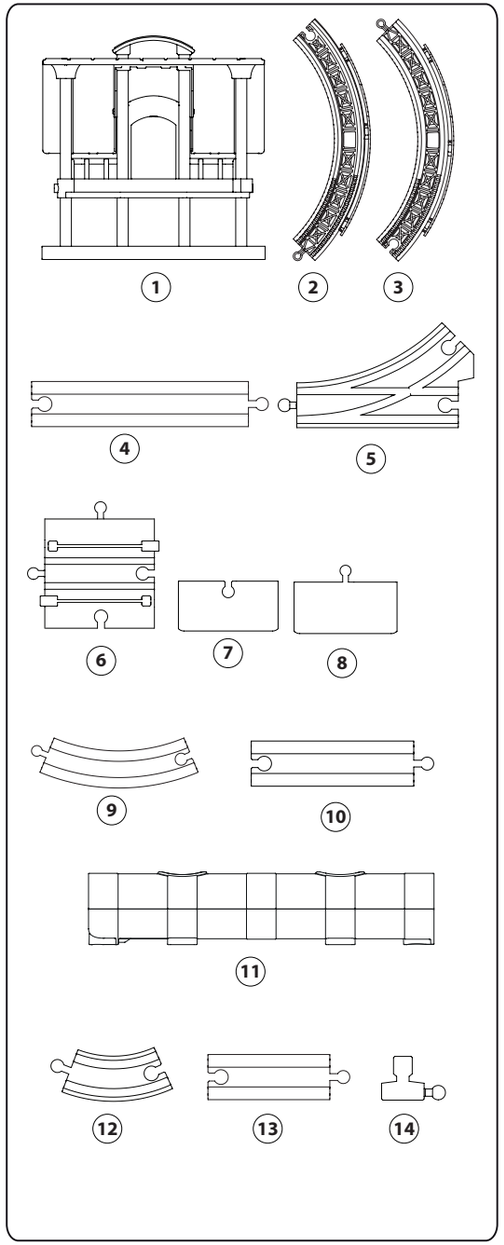

BRIO®

Central Station Set
33989

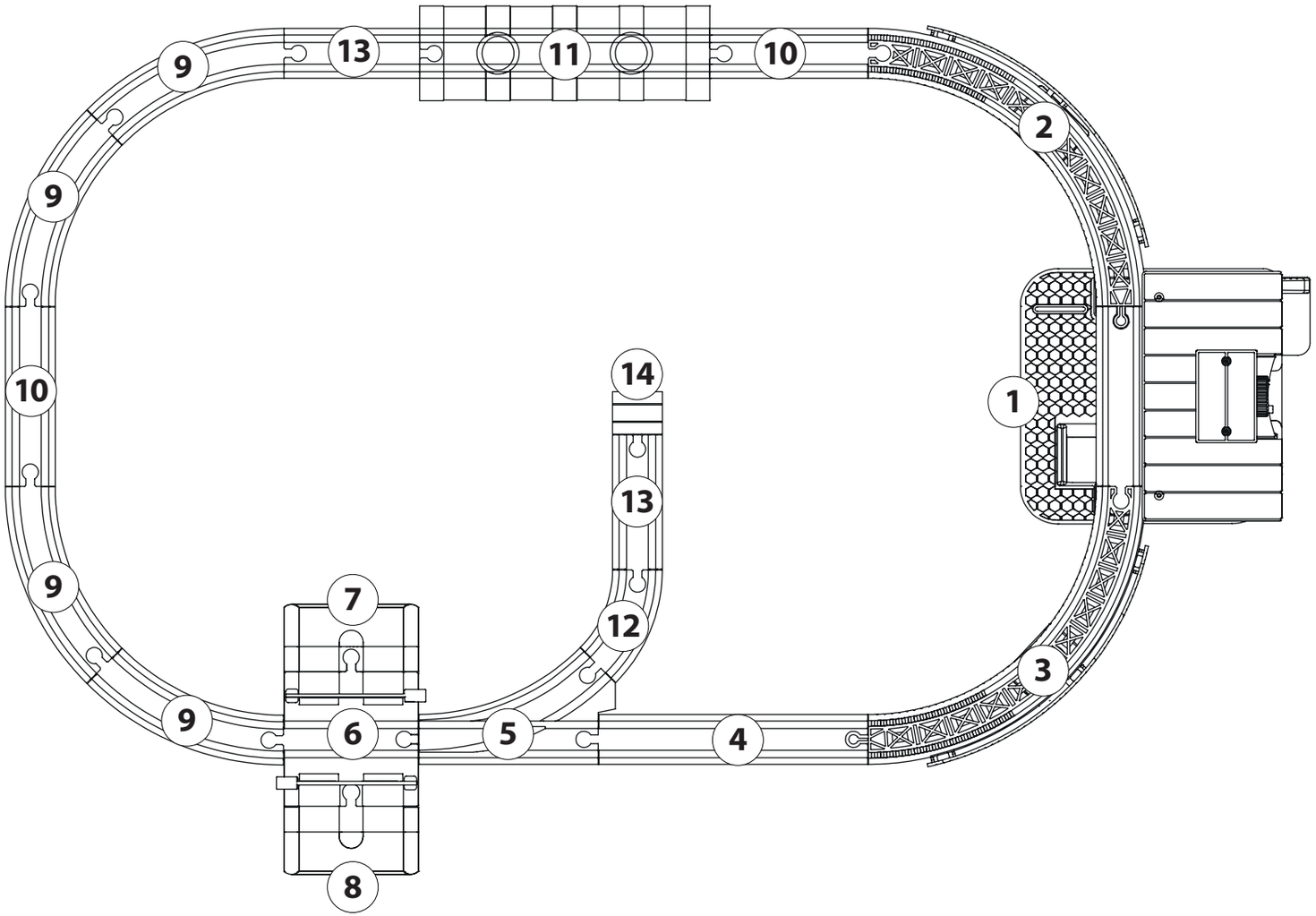

Designed by BRIO AB in Sweden 2021 (publ). Manufactured for BRIO AB (publ), Box 305, SE-201 23 Malmö, Sweden. ©BRIO AB (publ), Sweden 2021. Made in China. This product and its packaging are protected by intellectual Property Laws of many countries. Violators will be prosecuted. Retain this package for future reference. Please contact above address in case of events. Bitte bewahren Sie diese Informationen für spätere Referenzzwecke auf. Informations à conserver. Conservate la confezione per futuri riferimenti. Conforms to the Safety Requirements of EN71 and ASTM F963. Conforme aux éxigences de sécurité EN71 et ASTM F963.

3989-850