Thermalright

Macho 90

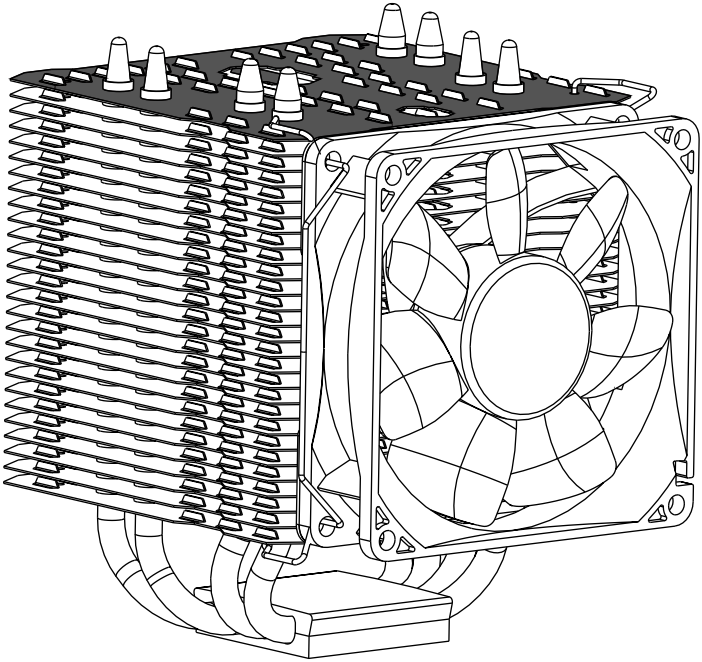

Macho 90 Assembly package

× 4

× 4

× 4

4

× 7

× 4

× 5

4

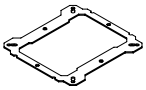 × 1

× 1

× 1

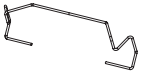 × 2

8

Exploded View

Important! Before proceeding with installation, please check for the most up-to-date instructions at **www.thermalright.com**

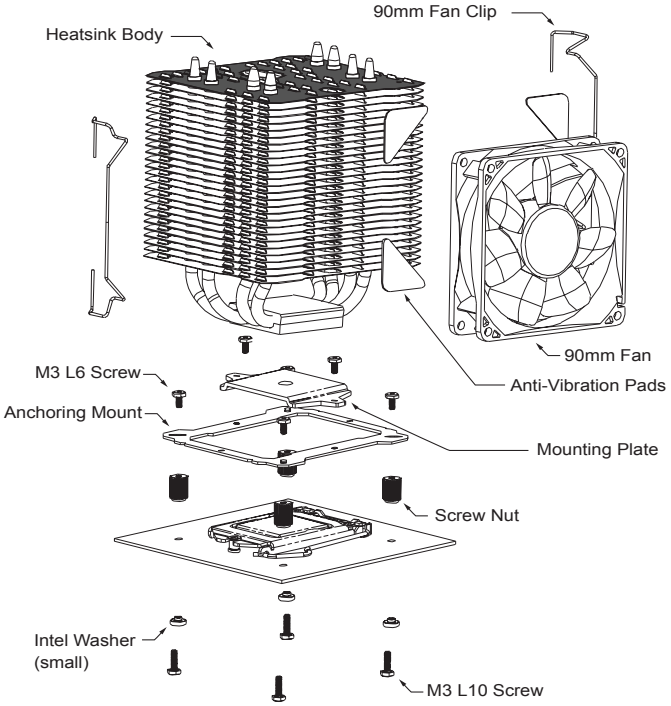

Component

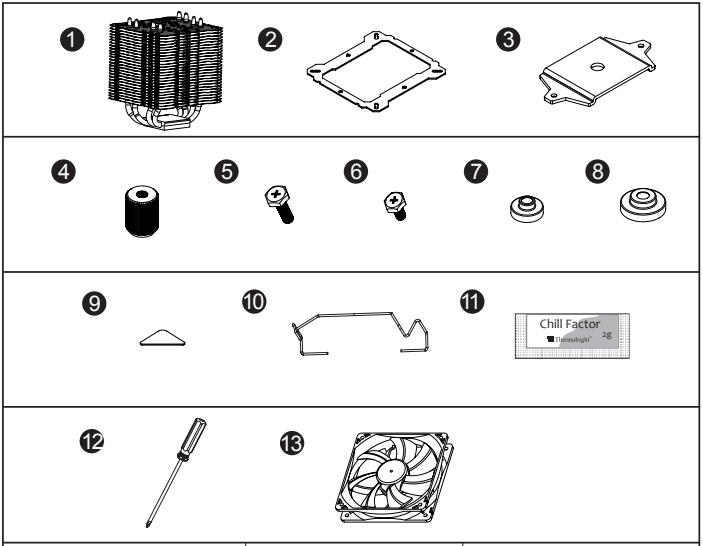

❶ Heatsink Body ×1	❷ Anchoring Mount ×1	❸ Mounting Plate ×1
❹ Screw Nut ×4	❺ M3 L10 Screw ×5	❻ M3 L6 Screw ×7
❼ Intel Washer (small) ×4	❽ AMD Washer (big) ×4	❾ Anti-Vibration Pad ×4
❿ 90mm Fan Clip ×2	⓫ Thermal paste ×1	⓬ Screw driver ×1
⓭ 90mm Fan ×1		

Installation Instructions:

Step 1:

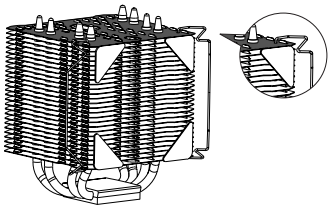

Step 1 : Take out Macho 90 cooler from the paper box.
Remove the 90mm Fan from the cooler by pulling the Fan Clips upwards in order to give room for ease of installation. And leave the Fan Clips on the Heatsink Body. Do not remove them.Apply Anti-Vibration Padding to 4 corners on the Heatsink Body.

Step 2:

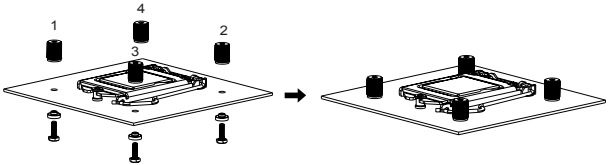

Step 2 : Install the four screw pillars.
Take one M3L10 screw and put one washer for Intel around the screw pillar. Snap it through one of holes around CPU socket from bottom towards top. Cap the screw pillar with the screw nut included and then tighten up. Now repeat this installation for the other three screw pillars in a criss-cross pattern.

Step 3:

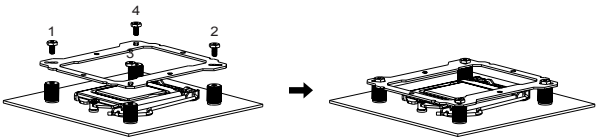

Step 3 : Place the Anchoring Mount on the Screw Nuts.
Use the four M3L6 screws to fix the Anchoring Mount on to the Screw Nuts.

Step 4:

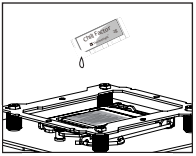

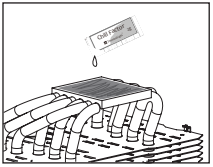

Step 4 : Applying Thermal Paste
Apply the Thermal Paste to the base of the Heatsink and the surface of the CPU evenly.

Step 5:

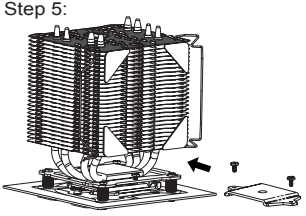

Step 5: Mounting Plate Installation
Place the Heatsink Body on top of the CPU. Make the Mounting Plate go through the Heatsink Body. Then use the supplied Screw Driver to fasten the two M3L6 Screws to Secure the Mounting Plate.

Step 6:

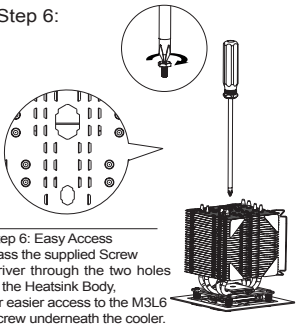

Step 6: Easy Access
Pass the supplied Screw Driver through the two holes of the Heatsink Body, for easier access to the M3L6 Screw underneath the cooler.

Step 7:

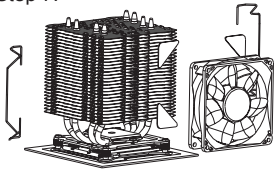

Step 7 : Fan Installation
Place the included 90mm fan onto the Heatsink Body. And then secure it with the 90mm Fan Clips, by pulling the Fan Clips to place the four ends at the four holes on the 90mm Fan.

Step 8:

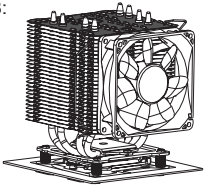

Step 8 : Installation completed
Plug in the fan connector to the CPU PWM Fan socket on the motherboard. Installation complete.

Exploded View

Important! Before proceeding with installation, please check for the most up-to-date instructions at **www.thermalright.com**

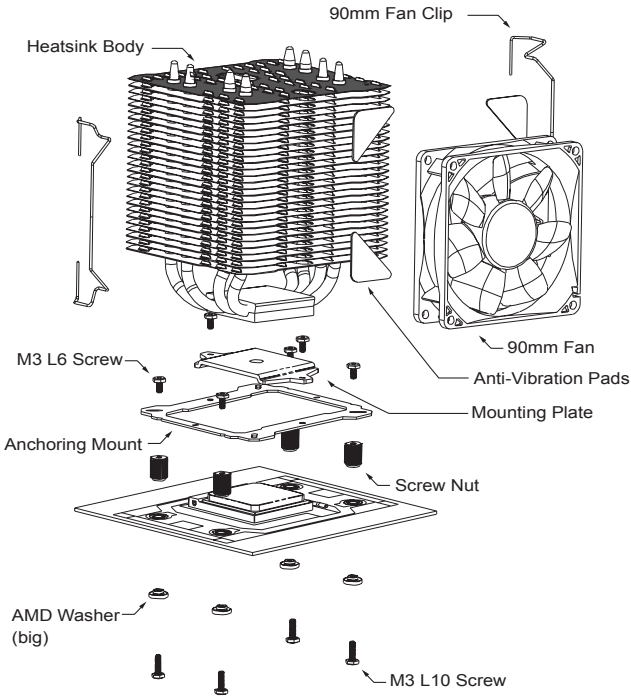

Component

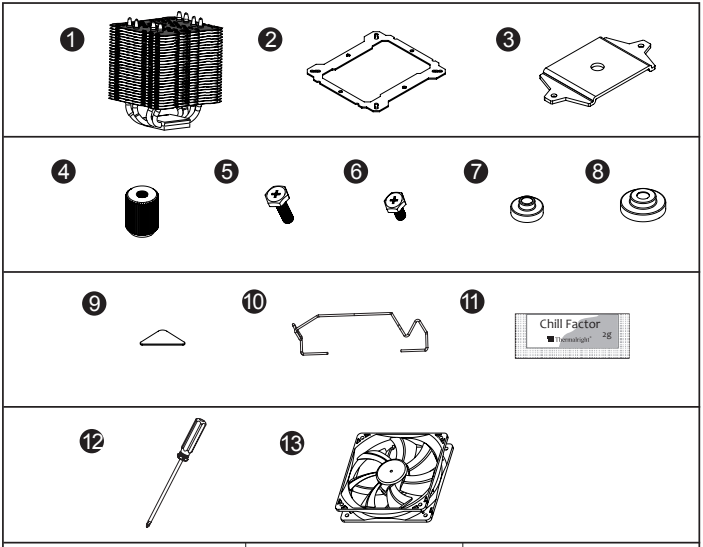

❶ Heatsink Body ×1	❷ Anchoring Mount ×1	❸ Mounting Plate ×1
❹ Screw Nut ×4	❺ M3 L10 Screw ×5	❻ M3 L6 Screw ×7
❼ Intel Washer (small) ×4	❽ AMD Washer (big) ×4	❾ Anti-Vibration Pad ×4
❿ 90mm Fan Clip ×2	⓫ Thermal paste ×1	⓬ Screw driver ×1
⓭ 90mm Fan ×1		

Installation Instructions:

Step 1:

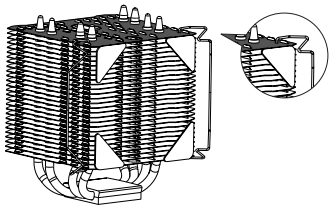

Step 1 : Take out Macho 90 cooler from the paper box.
Remove the 90mm Fan from the cooler by pulling the Fan Clips upwards in order to give room for ease of installation. And leave the Fan Clips on the Heatsink Body. Do not remove them.Apply Anti-Vibration Padding to 4 corners on the Heatsink Body.

Step 2:

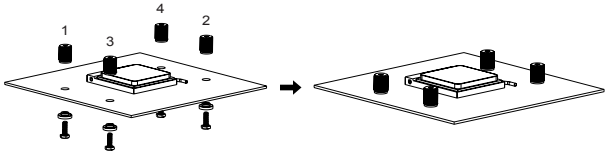

Step 2 : Install the four screw pillars.
Take one M3L10 screw and put one washer for AMD around the screw pillar. Snap it through one of holes around CPU socket from bottom towards top. Cap the screw pillar with the screw nut included and then tighten up. Now repeat this installation for the other three screw pillars in a criss-cross pattern.

Step 3:

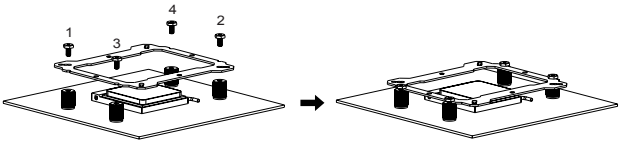

Step 3 : Place the Anchoring Mount on the Screw Nuts.
Use the four M3L6 screws to fix the Anchoring Mount on to the Screw Nuts.

Step 4:

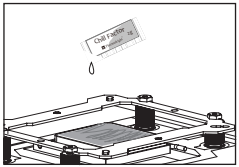

Step 4 : Applying Thermal Paste
Apply the Thermal Paste to the base of the Heatsink and the surface of the CPU evenly.

Step 5:

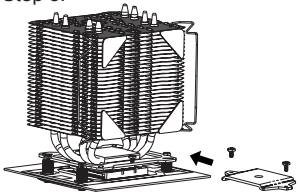

Step 5: Mounting Plate Installation
Place the Heatsink Body on top of the CPU. Make the Mounting Plate go through the Heatsink Body. Then use the supplied Screw Driver to fasten the two M3L6 Screws to Secure the Mounting Plate.

Step 6:

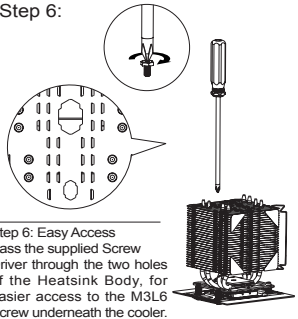

Step 6: Easy Access
Pass the supplied Screw Driver through the two holes of the Heatsink Body, for easier access to the M3L6 Screw underneath the cooler.

Step 7:

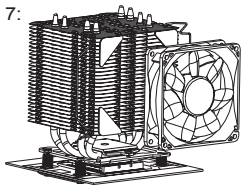

Step 7 : Fan Installation
Place the included 90mm fan onto the Heatsink Body. And then secure it with the 90mm Fan Clips, by pulling the Fan Clips to place the four ends at the four holes on the 90mm Fan.

Step 8:

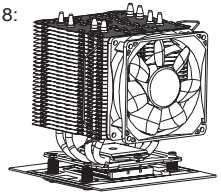

Step 8 : Installation completed
Plug in the fan connector to the CPU PWM Fan socket on the motherboard. Installation complete.

Technical Spec

Heatsink Specifications:
Dimension: Length 102mm x Width 102mm x Height 135mm
Weight: 450g
Heatpipe: 6mm heatpipe*4 units
Copper Base: C1100 Pure copper nickel plated

Fan Specification:
Dimension: L92mm x H92mm x W25m
Weight: 102g
Fan speed: 800~2000RPM (PWM controlled)
Fan noise: 27dBA MAX
Airflow: 39.36CFM MAX
Connector: 4 Pin (PWM Fan connector)

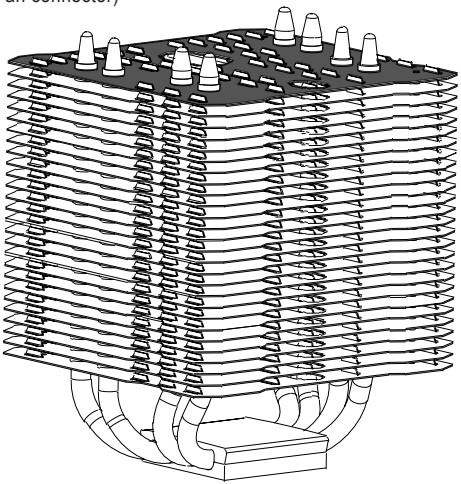

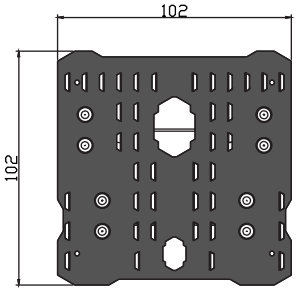
102
102

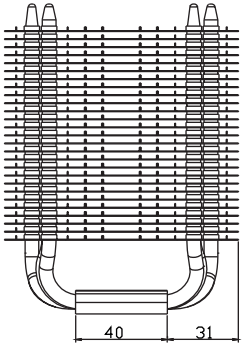
40
31

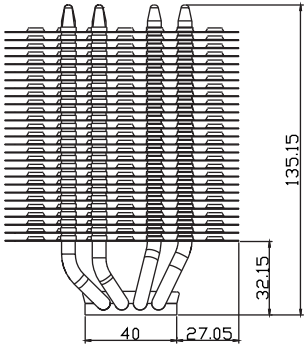
135.15
32.15
40
27.05

Awards

Computer Games
Empfehlung
GOLD AWARD
Benchmark Reviews.com
mAx
Preis-Leistung
best buy
gold
by
xtreme
hardware

The Ultimate Cooling Solutions!

Thermalright
www.thermalright.com
TEL: +886-2-8663-6630
FAX: +886-2-8663-6645
EMAIL: sales@thermalright.com