FITBY

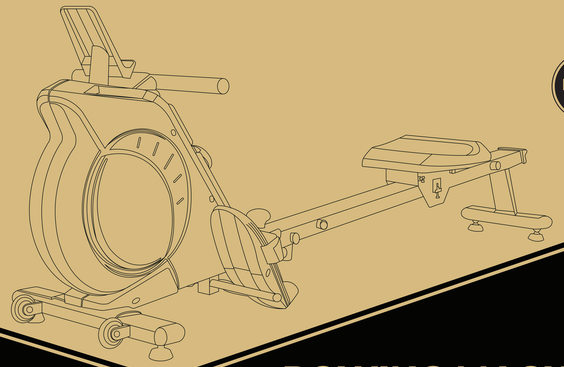

Black

ROWING MACHINE

FR: Rameur
DE: Rudergerät
NL: Roeitrainer
ES: Máquina de remo
IT: Vogatore
PL: Ergometr wioślarski
SE: Roddmaskin

FITBY

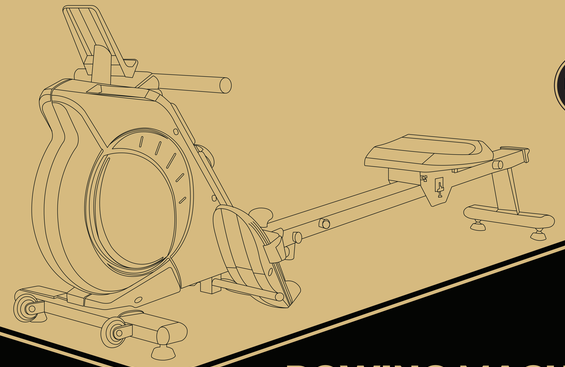

Black

ROWING MACHINE

Fitby B.V.
Artist: Ivo Lucas

Dimensions
Length x Width x Height
Volume in m³

Gross weight
Net weight

Dimensions B.V.
Lan van Vlaanderingstraat 122
2517 CC Den Haag

9 789090 565297