PATIO HEATER

INSTRUCTION MANUAL

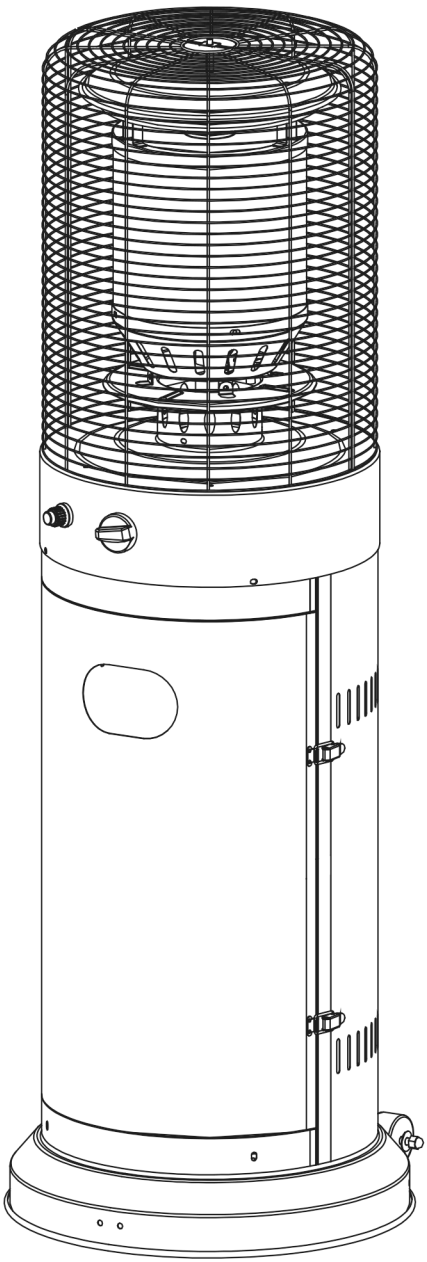

Keep the instructions for future reference

CE