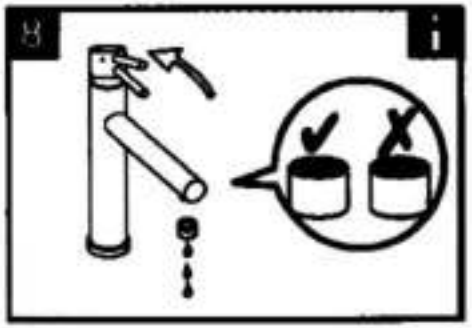

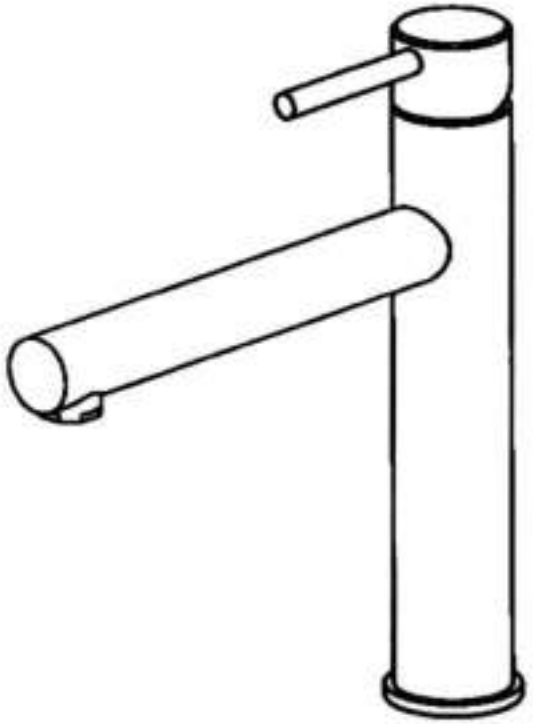

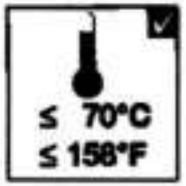
≤ 70°C
≤ 158°F

≤ 10 bar
≤ 145 psi

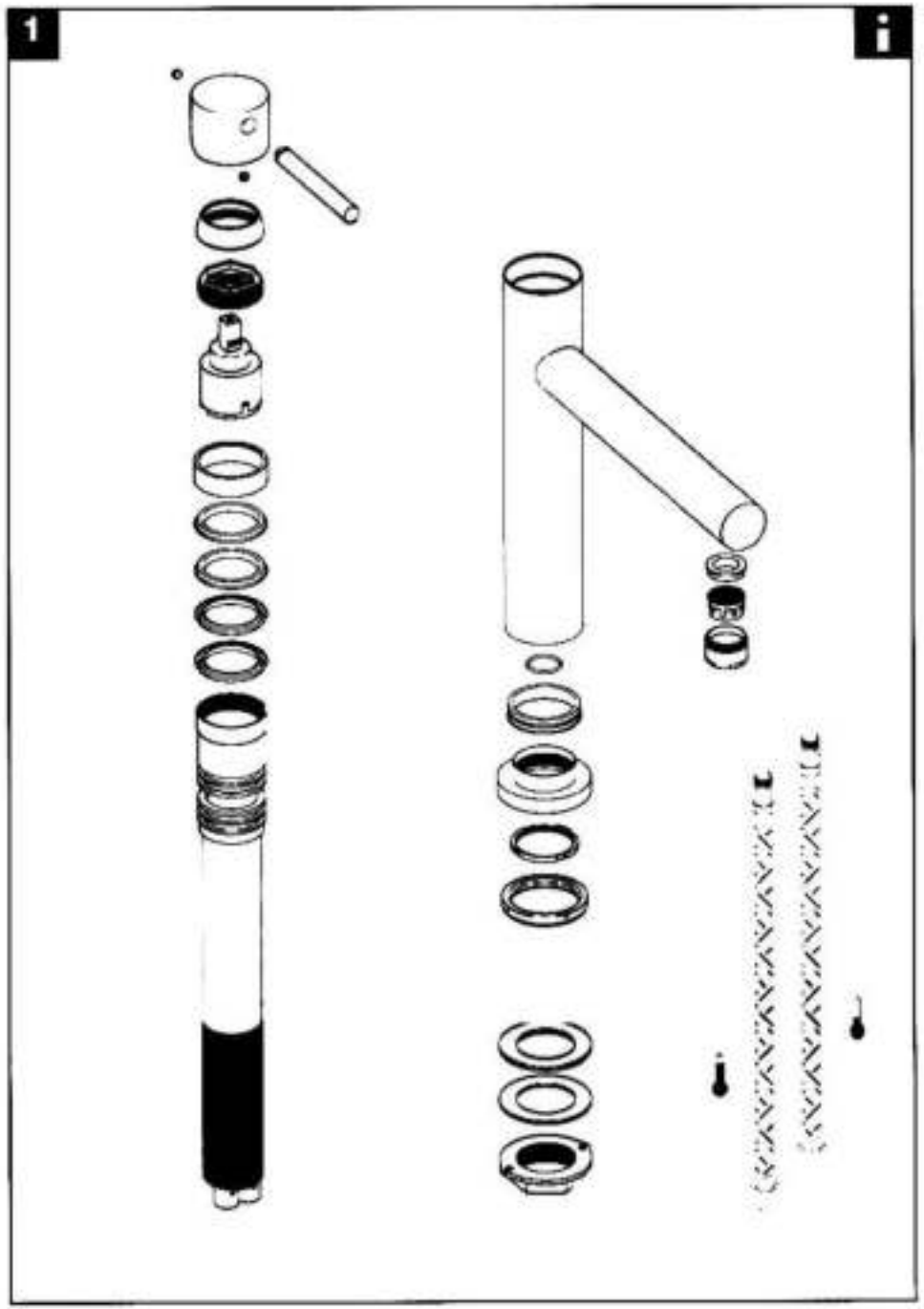
1

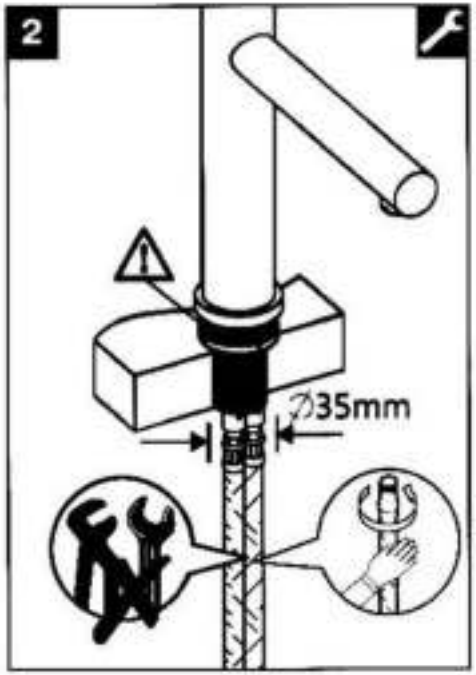
2
⌀35mm

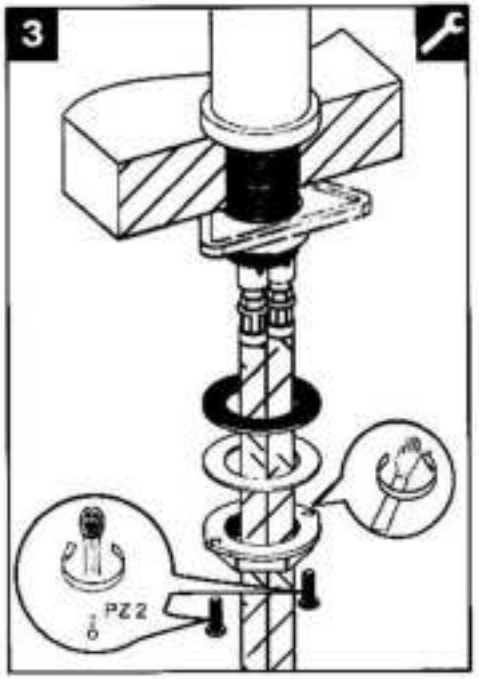
3
PZ2

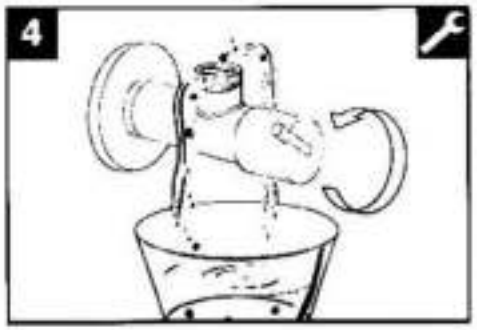
4

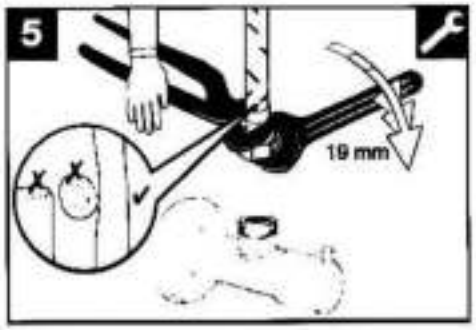
5
19 mm

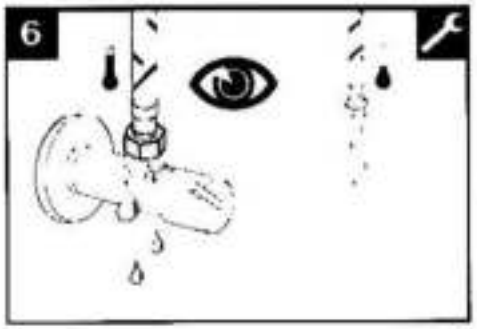
6

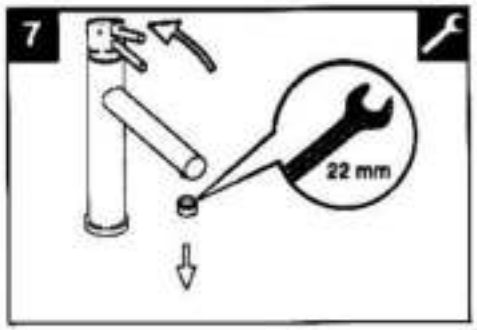
7
22 mm