SUN2000-(5K-12K)-MAP0 Series

User Manual

Issue	13
Date	2026-06-30

HUAWEI DIGITAL POWER TECHNOLOGIES CO., LTD.

Copyright © Huawei Digital Power Technologies Co., Ltd. 2026. All rights reserved.

No part of this document may be reproduced or transmitted in any form or by any means without prior written consent of Huawei Digital Power Technologies Co., Ltd.

Trademarks and Permissions

HUAWEI and other Huawei trademarks are the property of Huawei Technologies Co., Ltd.
All other trademarks and trade names mentioned in this document are the property of their respective holders.

Notice

The purchased products, services and features are stipulated by the contract made between Huawei Digital Power Technologies Co., Ltd. and the customer. All or part of the products, services and features described in this document may not be within the purchase scope or the usage scope. Unless otherwise specified in the contract, all statements, information, and recommendations in this document are provided "AS IS" without warranties, guarantees or representations of any kind, either express or implied. The information in this document is subject to change without notice. Every effort has been made in the preparation of this document to ensure accuracy of the contents, but all statements, information, and recommendations in this document do not constitute a warranty of any kind, express or implied.

Huawei Digital Power Technologies Co., Ltd.

Address: Huawei Digital Power Antuoshan Headquarters
Futian, Shenzhen 518043
People's Republic of China

Website: https://digitalpower.huawei.com

More Information

Huawei Digital Power Information Experience Center

https://info.support.huawei.com/Energy/info

About This Document

Purpose

This document describes the following inverter models (also referred to as SUN2000) in terms of the safety precautions, product introduction, installation, electrical connections, power-on and commissioning, maintenance, and technical specifications. Read this document carefully before installing and operating the inverter.

- SUN2000-5K-MAP0
- SUN2000-6K-MAP0
- SUN2000-8K-MAP0
- SUN2000-10K-MAP0
- SUN2000-10K-MAP0-BE
- SUN2000-12K-MAP0
- SUN2000-5K-MAP0-ZH
- SUN2000-6K-MAP0-ZH
- SUN2000-8K-MAP0-ZH
- SUN2000-10K-MAP0-ZH
- SUN2000-12K-MAP0-ZH

Statement

In this document, LUNA only refers to a specific model of Huawei Smart String ESS.

Intended Audience

This document is intended for:

- Technical support engineers
- Hardware installation engineers
- Commissioning engineers
- Maintenance engineers

 Copyright © Huawei Digital Power Technologies Co., Ltd.

Symbol Conventions

The symbols that may be found in this document are defined as follows.

Symbol	Description
DANGER	Indicates a hazard with a high level of risk which, if not avoided, will result in death or serious injury.
WARNING	Indicates a hazard with a medium level of risk which, if not avoided, could result in death or serious injury.
CAUTION	Indicates a hazard with a low level of risk which, if not avoided, could result in minor or moderate injury.
NOTICE	Indicates a potentially hazardous situation which, if not avoided, could result in equipment damage, data loss, performance deterioration, or unanticipated results. NOTICE is used to address practices not related to personal injury.
NOTE	Supplements the important information in the main text. NOTE is used to address information not related to personal injury, equipment damage, and environment deterioration.

Change History

Changes between document issues are cumulative. The latest document issue contains all the changes made in earlier issues.

Issue 13 (2026-06-30)

- Added the Saudi Arabia grid code to **A Grid Codes**.
- Updated **G Certificate Management and Maintenance**.

Issue 12 (2026-05-15)

Updated **5.4 Connecting an AC Output Power Cable**.

Issue 11 (2026-03-30)

- Updated **1.2 Electrical Safety**.
- Updated **2.2 Networking Application**.
- Updated **5 Electrical Connections**.
- Updated **7 Power-On and Commissioning**.
- Updated **A Grid Codes**.

 Copyright © Huawei Digital Power Technologies Co., Ltd.

Issue 10 (2025-12-30)

- Updated **5.2 Preparing Cables**.
- Updated **9 Technical Specifications**.
- Updated **A Grid Codes**.

Issue 09 (2025-09-30)

- Changed "Energy Management Assistant" to "SmartAssistant" throughout the document.
- Updated **2.2 Networking Application**.
- Updated **9 Technical Specifications**.
- Updated **A Grid Codes**.

Issue 08 (2025-07-25)

- Updated **2.2 Networking Application**.
- Updated **5.2 Preparing Cables**.
- Updated **9 Technical Specifications**.

Issue 07 (2025-07-01)

Updated 7 "Power-On and Commissioning."

Issue 06 (2025-04-17)

- Updated **5.2 Preparing Cables**.
- Updated **9 Technical Specifications**.

Issue 05 (2025-01-20)

- Updated **5.2 Preparing Cables**.

Issue 04 (2024-11-12)

- Updated **G Certificate Management and Maintenance**.

Issue 03 (2024-08-31)

Updated **A Grid Codes**.

Issue 02 (2024-07-19)

- Updated **5.2 Preparing Cables**.
- Updated **5.4 Connecting an AC Output Power Cable**.
- Updated **9 Technical Specifications**.
- Updated **A Grid Codes**.

Issue 01 (2024-05-13)

This issue is the first official release.

Contents

About This Document ii

1 Safety Information 1

1.1 Personal Safety 2
1.2 Electrical Safety 4
1.3 Environment Requirements 7
1.4 Mechanical Safety 9

2 Overview 13

2.1 Model Number Description 13
2.2 Networking Application 14
2.3 Appearance 20
2.4 Working Modes 22
2.5 Label Description 24

3 Storage Requirements 27

4 Installation 28

4.1 Installation Modes 28
4.2 Installation Requirements 28
4.2.1 Site Selection Requirements 28
4.2.2 Clearance Requirements 29
4.2.3 Angle Requirements 30
4.3 Tools 31
4.4 Checking Before the Installation 33
4.5 Moving the Inverter 33
4.6 Installing the Inverter on a Wall 34
4.7 Installing the Inverter on a Support 36

5 Electrical Connections 39

5.1 Precautions 39
5.2 Preparing Cables 40
5.3 Connecting a PE Cable 44
5.4 Connecting an AC Output Power Cable 46
5.5 Connecting DC Input Power Cables 49
5.6 (Optional) Connecting Battery Cables 53

5.7 Connecting Signal Cables....55
5.7.1 Connecting RS485 Communications Cables (Inverter Cascading)....59
5.7.2 Connecting RS485 Communications Cables (Power Meter)....61
5.7.3 Connecting RS485 Communications Cables (SmartAssistant)....66
5.7.4 Connecting RS485 Communications Cables (Smart Guard)....68
5.7.5 Connecting the Rapid Shutdown Signal Cable....70
5.7.6 Connecting the Grid Scheduling Signal Cable....72
5.7.7 Connecting NS Protection Signal Cables....74
5.7.8 Connecting the Battery Signal Cable....76
5.8 (Optional) Installing the Smart Dongle and Anti-theft Components....77

6 Check Before Power-On....79

7 Power-On and Commissioning....80

7.1 Powering On the Inverter....80
7.2 Device Commissioning....85

8 System Maintenance....88

8.1 Routine Maintenance....88
8.2 System Power-Off....90
8.3 Troubleshooting....90
8.4 Replacing an Inverter....90
8.5 Locating Insulation Resistance Faults....91

9 Technical Specifications....95

9.1 SUN2000-(5K-12K)-MAP0-ZH Technical Specifications....95
9.2 SUN2000-(5K-12K)-MAP0 Technical Specifications....101

A Grid Codes....109

B Resetting the Login Password on the Hardware....114

C Rapid Shutdown....116

D Baud Rate Negotiation....117

E Contact Information....120

F Digital Power Customer Service....121

G Certificate Management and Maintenance....122

G.1 Initial Certificate Risk Disclaimer....122
G.2 Application Scenarios of Initial Certificates....122
G.3 Updating a Certificate....123

H Acronyms and Abbreviations....125

1 Safety Information

Statement

Before transporting, storing, installing, operating, using, and/or maintaining the equipment, read this document, strictly follow the instructions provided herein, and follow all the safety instructions on the equipment and in this document. In this document, "equipment" refers to the products, software, components, spare parts, and/or services related to this document; "the Company" refers to the manufacturer (producer), seller, and/or service provider of the equipment; "you" refers to the entity that transports, stores, installs, operates, uses, and/or maintains the equipment.

The **DANGER**, **WARNING**, **CAUTION**, and **NOTICE** statements described in this document do not cover all the safety precautions. You also need to comply with relevant international, national, or regional standards and industry practices. **The Company shall not be liable for any consequences that may arise due to violations of safety requirements or safety standards concerning the design, production, and usage of the equipment.**

The equipment shall be used in an environment that meets the design specifications. Otherwise, the equipment may be faulty, malfunctioning, or damaged, which is not covered under the warranty. The Company shall not be liable for any property loss, personal injury, or even death caused thereby.

Comply with applicable laws, regulations, standards, and specifications during transportation, storage, installation, operation, use, and maintenance.

Do not perform reverse engineering, decompilation, disassembly, adaptation, implantation, or other derivative operations on the equipment software. Do not study the internal implementation logic of the equipment, obtain the source code of the equipment software, violate intellectual property rights, or disclose any of the performance test results of the equipment software.

The Company shall not be liable for any of the following circumstances or their consequences:

- Equipment damage due to force majeure such as earthquakes, floods, volcanic eruptions, debris flows, lightning strikes, fires, wars, armed conflicts, typhoons, hurricanes, tornadoes, and other extreme weather conditions
- Operation beyond the conditions specified in this document

 Copyright © Huawei Digital Power Technologies Co., Ltd.

- Installation or use in environments that do not comply with international, national, or regional standards
- Installation or use by unqualified personnel
- Failure to follow the operation instructions or safety precautions on the product or in this document
- Unauthorized modifications to the product or software code or removal of the product
- Damage caused during transportation by you or a third party authorized by you
- Storage conditions that do not meet the requirements specified in this document
- Failure to comply with local laws, regulations, or related standards due to the materials and tools prepared by you
- Damage caused by your or a third party's negligence, intentional breach, gross negligence, or improper operations or damage not caused by the Company

1.1 Personal Safety

DANGER

Ensure that power is off during installation. Do not install or remove a cable with power on. Transient contact between the core of the cable and the conductor will generate electric arcs or sparks, which may cause a fire or personal injury.

DANGER

Non-standard and improper operations on the energized equipment may cause fire, electric shocks, or explosion, resulting in property damage, personal injury, or even death.

DANGER

Before operations, remove conductive objects such as watches, bracelets, bangles, rings, and necklaces to prevent electric shocks.

DANGER

During operations, use dedicated insulated tools to prevent electric shocks or short circuits. The dielectric withstanding voltage level must comply with local laws, regulations, standards, and specifications.

 Copyright © Huawei Digital Power Technologies Co., Ltd.

WARNING

During operations, wear personal protective equipment such as protective clothing, insulated shoes, goggles, safety helmets, and insulated gloves.

Figure 1-1 Personal protective equipment

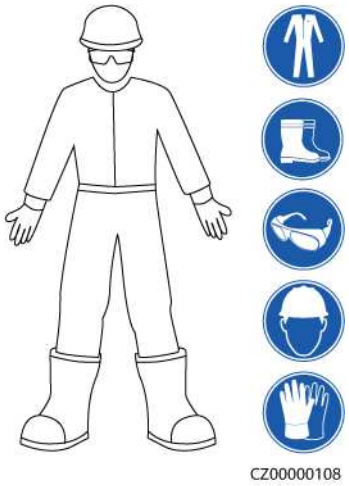

General Requirements

- Do not stop protective devices. Pay attention to the warnings, cautions, and related precautionary measures in this document and on the equipment.
- If there is a likelihood of personal injury or equipment damage during operations, immediately stop, report the case to the supervisor, and take feasible protective measures.
- Do not power on the equipment before it is installed or confirmed by professionals.
- Do not touch the power supply equipment directly or with conductors such as damp objects. Before touching any conductor surface or terminal, measure the voltage at the contact point to ensure that there is no risk of electric shock.
- Do not touch operating equipment because the enclosure is hot.
- Do not touch a running fan with your hands, components, screws, tools, or boards. Otherwise, personal injury or equipment damage may occur.
- In the case of a fire, immediately leave the building or the equipment area and activate the fire alarm or call emergency services. Do not enter the affected building or equipment area under any circumstances.

Personnel Requirements

- Only professionals and trained personnel are allowed to operate the equipment.
  - Professionals: personnel who are familiar with the working principles and structure of the equipment, trained or experienced in equipment operations and are clear of the sources and degree of various potential hazards in equipment installation, operation, maintenance

  - Trained personnel: personnel who are trained in technology and safety, have required experience, are aware of possible hazards on themselves in certain operations, and are able to take protective measures to minimize the hazards on themselves and other people
- Personnel who plan to install or maintain the equipment must receive adequate training, be able to correctly perform all operations, and understand all necessary safety precautions and local relevant standards.
- Only qualified professionals or trained personnel are allowed to install, operate, and maintain the equipment.
- Only qualified professionals are allowed to remove safety facilities and inspect the equipment.
- Personnel who will perform special tasks such as electrical operations, working at heights, and operations of special equipment must possess the required local qualifications.
- Only authorized professionals are allowed to replace the equipment or components (including software).
- Only personnel who need to work on the equipment are allowed to access the equipment.

1.2 Electrical Safety

DANGER

Before connecting cables, ensure that the equipment is intact. Otherwise, electric shocks or fires may occur.

DANGER

Non-standard and improper operations may result in fire or electric shocks.

DANGER

Prevent foreign matter from entering the equipment during operations. Otherwise, short circuits, equipment damage, load power derating, power failure, or personal injury may occur.

WARNING

For the equipment that needs to be grounded, install the ground cable first when installing the equipment and remove the ground cable last when removing the equipment.

 Copyright © Huawei Digital Power Technologies Co., Ltd.

WARNING

During the installation of PV strings and the inverter, the positive or negative terminals of PV strings may be short-circuited to ground if the power cables are not properly installed or routed. In this case, an AC or DC short circuit may occur and damage the inverter. The resulting device damage is not covered under any warranty.

CAUTION

Do not route cables near the air intake or exhaust vents of the equipment.

CAUTION

The components (such as power distribution boxes, circuit breakers, and cables) used for electrical connections shall comply with fire resistance and flame retardance standards (such as IEC 60670-1). The materials and structure shall meet fire safety requirements.

General Requirements

- Follow the procedures described in the document for installation, operation, and maintenance. Do not reconstruct or alter the equipment, add components, or change the installation sequence without permission.
- Obtain approval from the national or local electric utility company before connecting the equipment to the grid.
- Observe the power plant safety regulations, such as the operation and work ticket mechanisms.
- Install temporary fences or warning ropes and hang "No Entry" signs around the operation area to keep unauthorized personnel away from the area.
- Before installing or removing power cables, turn off the switches of the equipment and its upstream and downstream switches.
- Before performing operations on the equipment, check that all tools meet the requirements and record the tools. After the operations are complete, collect all of the tools to prevent them from being left inside the equipment.
- Before installing power cables, check that cable labels are correct and cable terminals are insulated.
- When installing the equipment, use a torque tool of a proper measurement range to tighten the screws. When using a wrench to tighten the screws, ensure that the wrench does not tilt and the torque error does not exceed 10% of the specified value.
- Ensure that bolts are tightened with a torque tool and marked in red and blue after double-check. Installation personnel mark tightened bolts in blue. Quality inspection personnel confirm that the bolts are tightened and then mark them in red. (The marks must cross the edges of the bolts.)

 Copyright © Huawei Digital Power Technologies Co., Ltd.

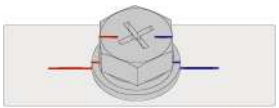

- If the equipment has multiple inputs, disconnect all the inputs and wait until the equipment is completely powered off before performing operations on the equipment.
- Before maintaining a downstream electrical or power distribution device, turn off the output switch on the power supply equipment.
- During equipment maintenance, attach "No switching on" labels near the upstream and downstream switches or circuit breakers as well as warning signs to prevent accidental connection. The equipment can be powered on only after troubleshooting is complete.
- Do not open equipment panels.
- Check equipment connections periodically, ensuring that all screws are securely tightened.
- Only qualified professionals can replace a damaged cable.
- Do not scrawl, damage, or block any labels or nameplates on the equipment. Promptly replace labels that have worn out.
- Do not use solvents such as water, alcohol, or oil to clean electrical components inside or outside of the equipment.

Grounding

- Ensure that the grounding impedance of the equipment complies with local electrical standards.
- Ensure that the equipment is connected permanently to the protective ground. Before operating the equipment, check its electrical connection to ensure that it is reliably grounded.
- Do not operate the equipment in the absence of a properly installed ground conductor.
- Do not damage the ground conductor.

Cabling Requirements

- When selecting, installing, and routing cables, follow local safety regulations and rules.
- When routing power cables, ensure that there is no coiling or twisting. Do not join or weld power cables. If necessary, use a longer cable.
- Ensure that all cables are properly connected and insulated, and meet specifications.
- Ensure that the cables are protected from mechanical stress, overheating, and corrosion.
- Ensure that cables are not squeezed, torn, warped, or whitened.
- Ensure that the slots and holes for routing cables are free from sharp edges, and that the positions where cables are routed through pipes or cable holes are equipped with cushion materials to prevent the cables from being damaged by sharp edges or burrs.

 Copyright © Huawei Digital Power Technologies Co., Ltd.

- Ensure that cables of the same type are bound together neatly and straight and that the cable sheath is intact. When routing cables of different types, ensure that they are away from each other without entanglement and overlapping.
- Secure buried cables using cable supports and cable clips. Ensure that the cables in the backfill area are in close contact with the ground to prevent cable deformation or damage during backfilling.
- If the external conditions (such as the cable layout or ambient temperature) change, verify the cable usage in accordance with the IEC-60364-5-52 or local laws and regulations. For example, check that the current-carrying capacity meets requirements.
- When routing cables, reserve at least 30 mm clearance between the cables and heat-generating components or areas. This prevents deterioration or damage to the cable insulation layer.

1.3 Environment Requirements

DANGER

Do not expose the equipment to flammable or explosive gas or smoke. Do not perform any operation on the equipment in such environments.

DANGER

Do not store any flammable or explosive materials in the equipment area.

DANGER

Do not place the equipment near heat sources or fire sources, such as smoke, candles, heaters, or other heating devices. Overheating may damage the equipment or cause a fire.

WARNING

Install the equipment in an area far away from liquids. Do not install it under areas prone to condensation, such as under water pipes and air exhaust vents, or areas prone to water leakage, such as air conditioner vents, ventilation vents, or feeder windows of the equipment room. Ensure that no liquid enters the equipment to prevent faults or short circuits.

 Copyright © Huawei Digital Power Technologies Co., Ltd.

WARNING

To prevent damage or fire due to high temperature, ensure that the ventilation vents or heat dissipation systems are not obstructed or covered by other objects while the equipment is running.

General Requirements

- Store the equipment according to the storage requirements. Equipment damage caused by unqualified storage conditions is not covered under the warranty.
- Keep the installation and operating environments of the equipment within the allowed ranges. Otherwise, its performance and safety will be compromised.
- The operating temperature range provided in the equipment's technical specifications refers to the ambient temperatures in equipment's installation environment.
- Do not install, use, or operate outdoor equipment and cables (including but not limited to moving equipment, operating equipment and cables, inserting connectors to or removing connectors from signal ports connected to outdoor facilities, working at heights, performing outdoor installation, and opening doors) in harsh weather conditions such as lightning, rain, snow, and level 6 or stronger wind.
- Do not install the equipment in an environment with dust, smoke, volatile or corrosive gases, infrared and other radiations, organic solvents, or salty air.
- Do not install the equipment in an environment with conductive metal or magnetic dust.
- Do not install the equipment in an area conducive to the growth of microorganisms such as fungus or mildew.
- Do not install the equipment in an area with strong vibration, noise, or electromagnetic interference.
- Ensure that the site complies with local laws, regulations, and related standards.
- Ensure that the ground in the installation environment is solid, free from spongy or soft soil, and not prone to subsidence. The site must not be located in a low-lying land prone to water or snow accumulation, and the horizontal level of the site must be above the highest water level of that area in history.
- Do not install the equipment in a position that may be submerged in water.
- If the equipment is installed in a place with abundant vegetation, in addition to routine weeding, harden the ground underneath the equipment using cement or gravel (the area shall be greater than or equal to 3 m x 2.5 m).
- Do not install the equipment outdoors in salt-affected areas because it may be corroded. A salt-affected area refers to the region within 500 m of the coast or prone to sea breeze. Regions prone to sea breeze vary with weather conditions (such as typhoons and monsoons) or terrains (such as dams and hills).
- Before installation, operation, and maintenance, clean up any water, ice, snow, or other foreign objects on the top of the equipment.

 Copyright © Huawei Digital Power Technologies Co., Ltd.

- When installing the equipment, ensure that the installation surface is solid enough to bear the weight of the equipment.
- After installing the equipment, remove the packing materials such as cartons, foam, plastics, and cable ties from the equipment area.

1.4 Mechanical Safety

WARNING

Ensure that all necessary tools are ready and inspected by a professional organization. Do not use tools that have signs of scratches or fail to pass the inspection or whose inspection validity period has expired. Ensure that the tools are secure and not overloaded.

WARNING

Do not drill holes into the equipment. Doing so may affect the sealing performance and electromagnetic containment of the equipment and damage components or cables inside. Metal shavings from drilling may short-circuit boards inside the equipment.

General Requirements

- Repaint any paint scratches caused during equipment transportation or installation in a timely manner. Equipment with scratches must not be exposed for an extended period of time.
- Do not perform operations such as arc welding and cutting on the equipment without evaluation by the Company.
- Do not install other devices on the top of the equipment without evaluation by the Company.
- When performing operations over the top of the equipment, take measures to protect the equipment against damage.
- Use correct tools and operate them in the correct way.

Moving Heavy Objects

- Be cautious to prevent injury when moving heavy objects.

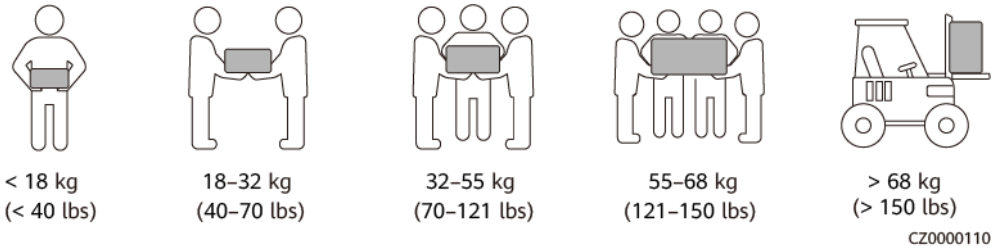

- If multiple persons need to move a heavy object together, determine the manpower and work division with consideration of height and other conditions to ensure that the weight is equally distributed.

- If two persons or more move a heavy object together, ensure that the object is lifted and landed simultaneously and moved at a uniform pace under the supervision of one person.
- Wear personal protective gears such as protective gloves and shoes when manually moving the equipment.
- To move an object by hand, approach to the object, squat down, and then lift the object gently and stably by the force of the legs instead of your back. Do not lift it suddenly or turn your body around.
- Do not quickly lift a heavy object above your waist. Place the object on a workbench that is half-waist high or any other appropriate place, adjust the positions of your palms, and then lift it.
- Move a heavy object stably with balanced force at an even and low speed. Put down the object stably and slowly to prevent any collision or drop from scratching the surface of the equipment or damaging the components and cables.
- When moving a heavy object, be aware of the workbench, slope, staircase, and slippery places. When moving a heavy object through a door, ensure that the door is wide enough to move the object and avoid bumping or injury.
- When transferring a heavy object, move your feet instead of turning your waist around. When lifting and transferring a heavy object, ensure that your feet point to the target direction of movement.
- When transporting the equipment using a pallet truck or forklift, ensure that the tynes are properly positioned so that the equipment does not topple. Before moving the equipment, secure it to the pallet truck or forklift using ropes. When moving the equipment, assign dedicated personnel to take care of it.
- Choose sea, roads in good conditions, or airplanes for transportation. Do not transport the equipment by railway. Avoid tilt or jolt during transportation.

Using Ladders

- Use wooden or insulated ladders when you need to perform live-line working at heights.
- Platform ladders with protective rails are preferred. Single ladders are not recommended.
- Before using a ladder, check that it is intact and confirm its load bearing capacity. Do not overload it.
- Ensure that the ladder is securely positioned and held firm.

CZ00000107

- When climbing up the ladder, keep your body stable and your center of gravity between the side rails, and do not overreach to the sides.
- When a step ladder is used, ensure that the pull ropes are secured.
- If a single ladder is used, the recommended angle for the ladder against the floor is 75 degrees, as shown in the following figure. A square can be used to measure the angle.

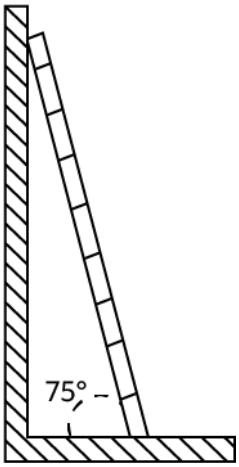

PI02SC0008

- If a single ladder is used, ensure that the wider end of the ladder is at the bottom, and take protective measures to prevent the ladder from sliding.
- If a single ladder is used, do not climb higher than the fourth rung of the ladder from the top.
- If you use a single ladder to climb up to a platform, ensure that the ladder is at least 1 m higher than the platform.

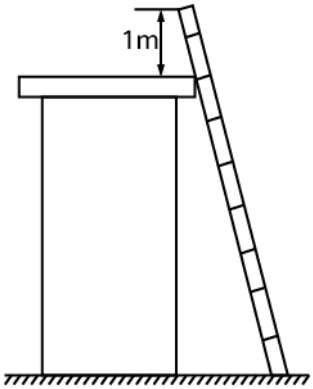

PI02SC0009

Hoisting

- Only trained and qualified personnel are allowed to perform hoisting operations.
- Install temporary warning signs or fences to isolate the hoisting area.
- Ensure that the foundation where hoisting is performed meets the load-bearing requirements.
- Before hoisting objects, ensure that hoisting tools are firmly secured onto a fixed object or wall that meets the load-bearing requirements.

- During hoisting, do not stand or walk under the crane or the hoisted objects.
- Do not drag steel ropes and hoisting tools or bump the hoisted objects against hard objects during hoisting.
- Ensure that the angle between two hoisting ropes is no more than 90 degrees, as shown in the following figure.

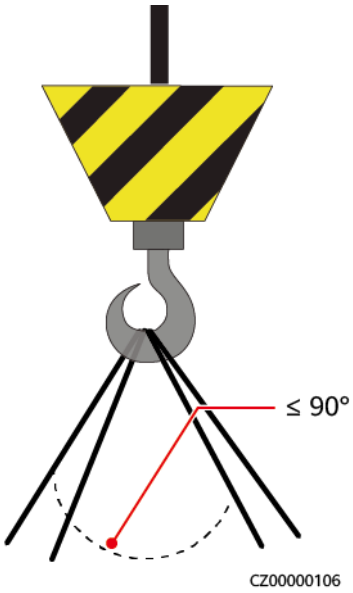

Drilling Holes

- Obtain consent from the customer and contractor before drilling holes.
- Wear protective equipment such as safety goggles and protective gloves when drilling holes.
- To avoid short circuits or other risks, do not drill holes into buried pipes or cables.
- When drilling holes, protect the equipment from shavings. After drilling, clean up any shavings.

2 Overview

The SUN2000 is a three-phase grid-tied PV string inverter that converts the DC power generated by PV strings into AC power and feeds the power into the power grid.

2.1 Model Number Description

This document involves the following product models:

- SUN2000-5K-MAP0
- SUN2000-6K-MAP0
- SUN2000-8K-MAP0
- SUN2000-10K-MAP0
- SUN2000-10K-MAP0-BE
- SUN2000-12K-MAP0
- SUN2000-5K-MAP0-ZH
- SUN2000-6K-MAP0-ZH
- SUN2000-8K-MAP0-ZH
- SUN2000-10K-MAP0-ZH
- SUN2000-12K-MAP0-ZH

Figure 2-1 Model number (using SUN2000-12K-MAP0-ZH as an example)

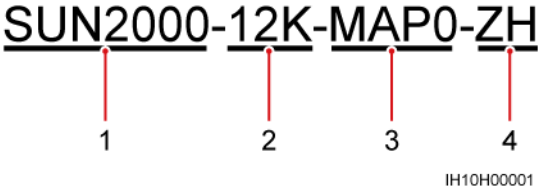

Table 2-1 Model number description

No.	Item	Description
1	Series name	SUN2000: three-phase grid-tied PV string inverter
2	Power	● 5K: The rated power is 5 kW. ● 6K: The rated power is 6 kW. ● 8K: The rated power is 8 kW. ● 10K: The rated power is 10 kW. ● 12K: The rated power is 12 kW.
3	Design code	MAP0: three-phase product series with the DC input voltage level of 1000 V or 1100 V
4	Region	● ZH: China ● BE: Belgium

2.2 Networking Application

The SUN2000 applies to grid-tied PV systems for residential rooftop projects and small-sized ground-mounted plants. The system consists of PV strings, grid-tied inverters, AC switches, and power distribution units (PDUs).

 Copyright © Huawei Digital Power Technologies Co., Ltd.

Smart Dongle Networking

Figure 2-2 Smart Dongle networking (dashed boxes indicate optional components)

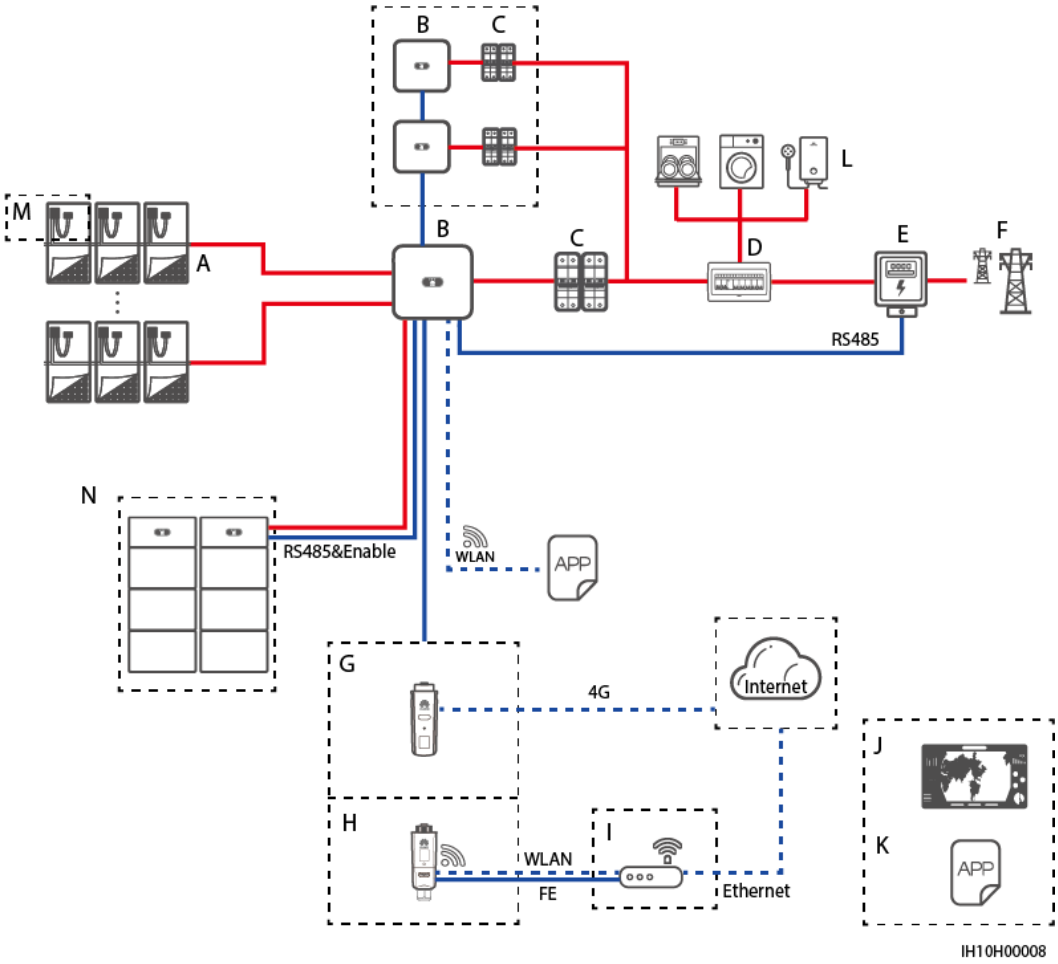

(A) PV string	(B) SUN2000	(C) AC switch
(D) AC PDU	(E) Power meter	(F) Power grid
(G) 4G Smart Dongle	(H) WLAN-FE Smart Dongle	(I) Router
(J) Management system	(K) App	(L) Load
(M) Smart PV Optimizer	(N) Battery	

NOTE

For details about the Smart Dongle networking, see **Residential Solution Mapping Relationship and Wiring Guide**.

SmartAssistant Networking

Figure 2-3 SmartAssistant networking (dashed boxes indicate optional components)

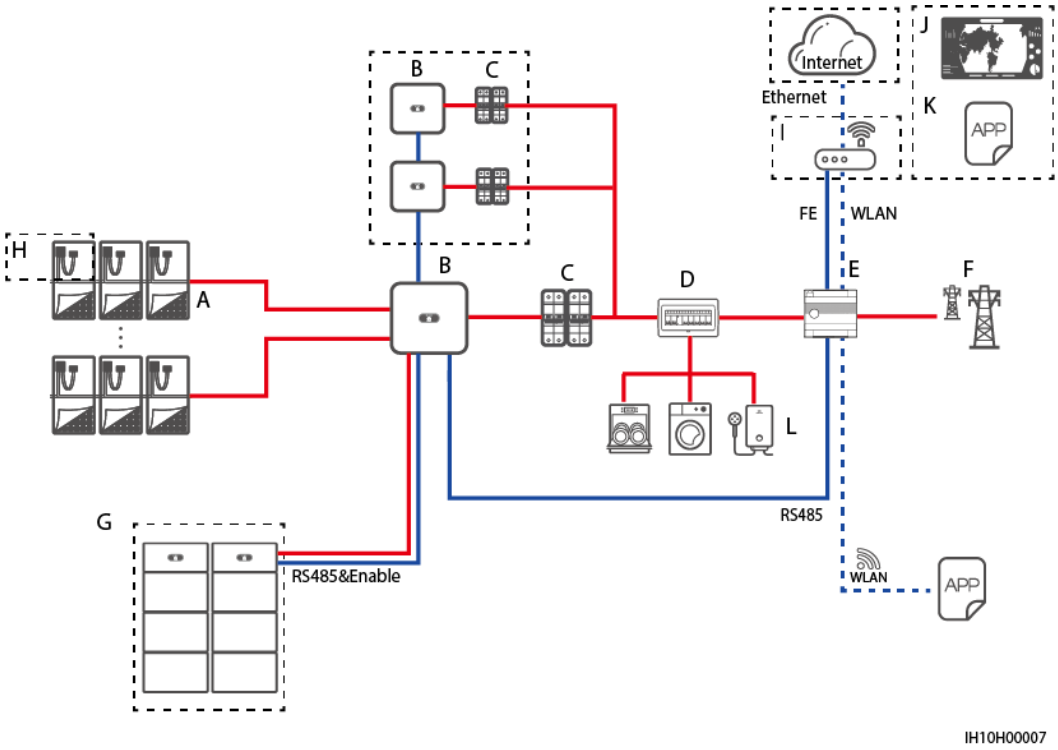

(A) PV string	(B) SUN2000	(C) AC switch
(D) AC PDU	(E) SmartAssistant	(F) Power grid
(G) Battery	(H) Smart PV Optimizer	(I) Router
(J) Management system	(K) App	(L) Load

NOTE

- For details about SmartAssistant networking, see **Residential Solution Mapping Relationship and Wiring Guide**.

Smart Guard Networking

Figure 2-4 Networking with all loads connected to the Smart Guard (dashed boxes indicate optional components)

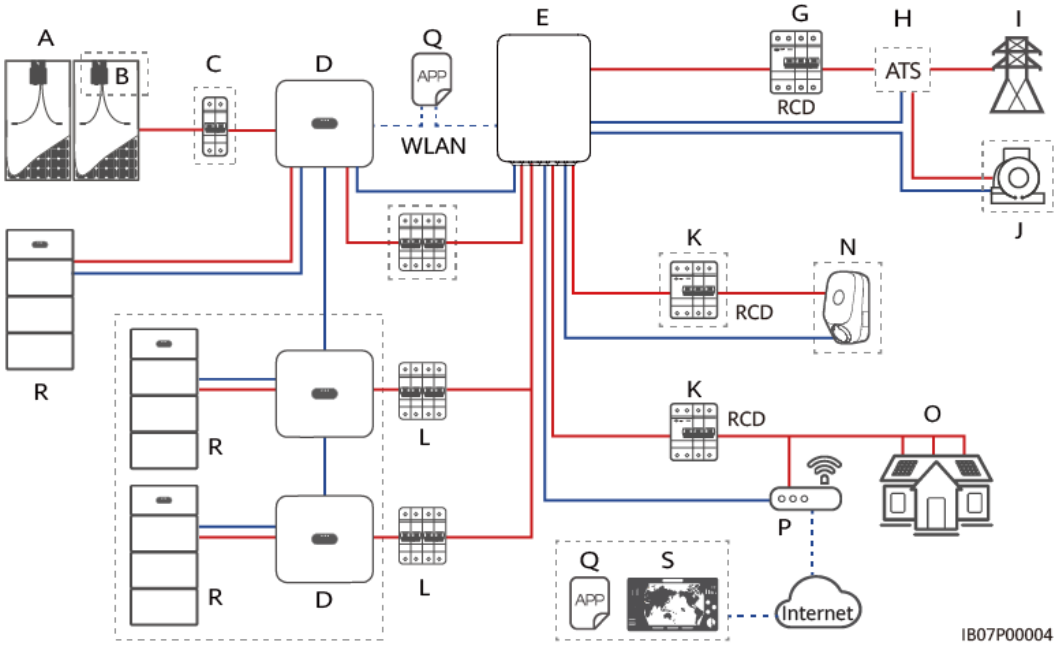

Figure 2-5 Networking with some of loads connected to the Smart Guard (dashed boxes indicate optional components)

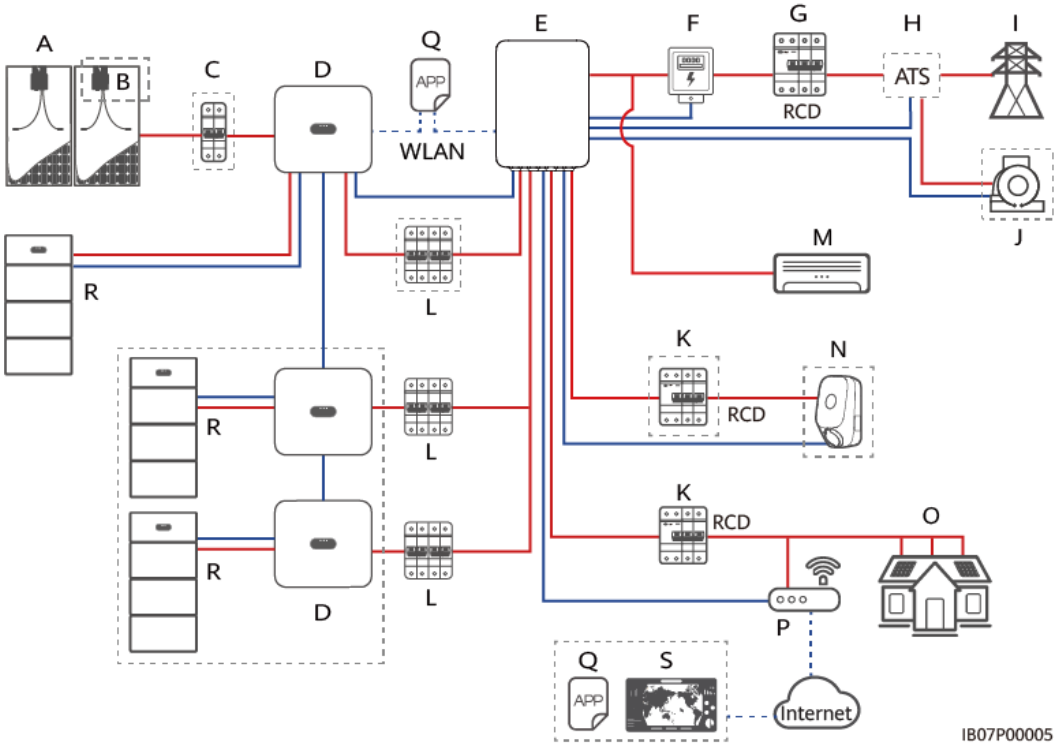

(A) PV string	(B) Smart PV Optimizer	(C) DC switch
(D) SUN2000	(E) Smart Guard	(F) Power meter
(G) Main circuit breaker	(H) ATS	(I) Power grid
(J) Genset	(K) Residual current device (RCD)	(L) AC switch
(M) Load not connected to the Smart Guard	(N) Non-backup load	(O) Backup load
(P) Router	(Q) App	(R) LUNA2000
(S) Management system		

NOTE

For details about the Smart Guard networking, see **Residential Solution Mapping Relationship and Wiring Guide**.

Compatibility with Third-Party Systems

Huawei inverters are compatible with third-party inverters or third-party energy storage systems (ESSs).

Figure 2-6 Networking with third-party systems

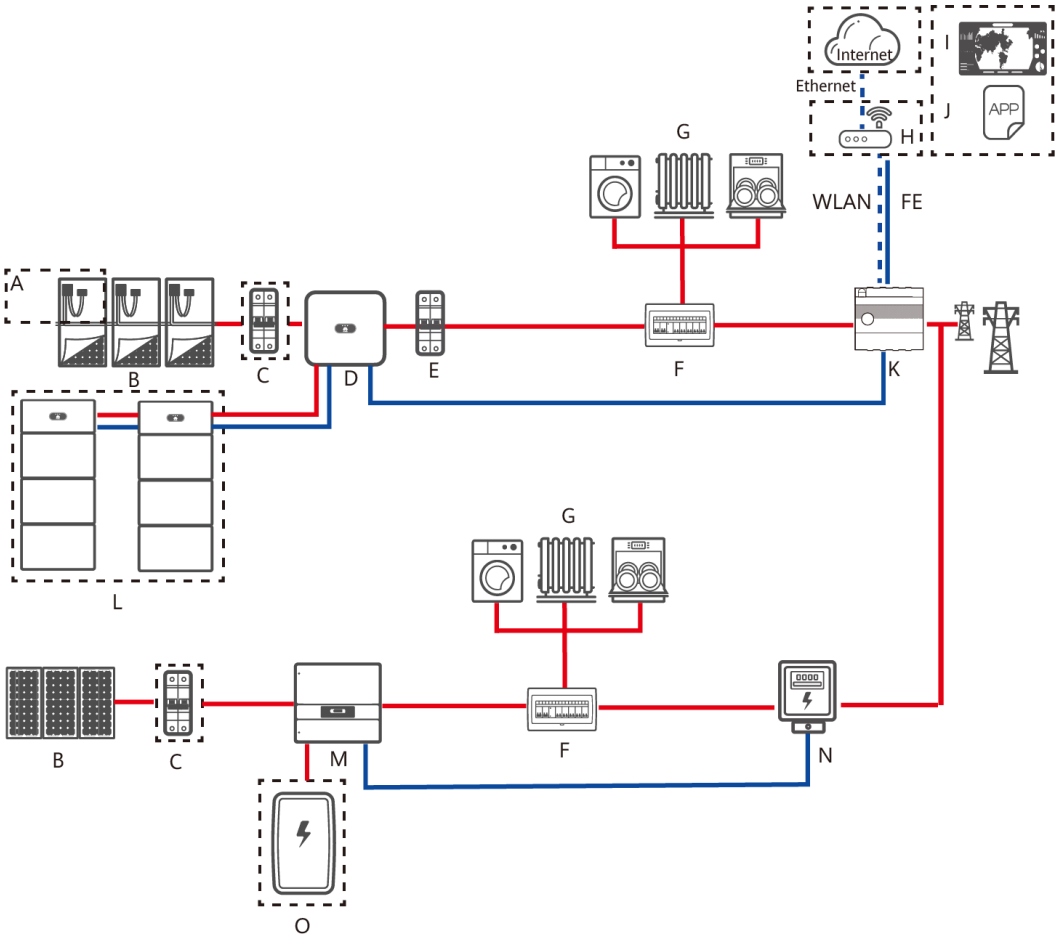

(A) Optimizer	(B) PV string	(C) DC switch
(D) Huawei smart PV inverter	(E) AC switch	(F) AC power distribution unit (PDU)
(G) Load	(H) Router	(I) Management system
(J) App	(K) SmartAssistant	(L) LUNA2000
(M/O) Third-party inverter or third-party ESS	(N) Power meter	

Earthing Systems

The SUN2000 supports the TN-S, TN-C, TN-C-S, TT, and IT earthing systems.

Figure 2-7 Supported earthing systems

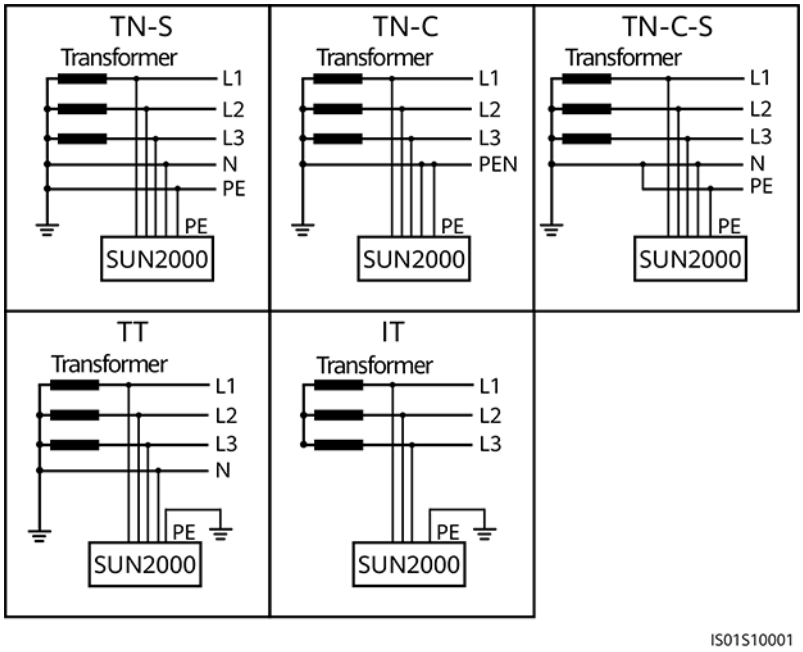

NOTE

- In a TT power grid, the N-PE voltage should be lower than 30 V.
- In an IT power grid, you need to set **isolation settings** to **input not grounded, with a transformer.**

2.3 Appearance

Appearance and Ports

Figure 2-8 Appearance

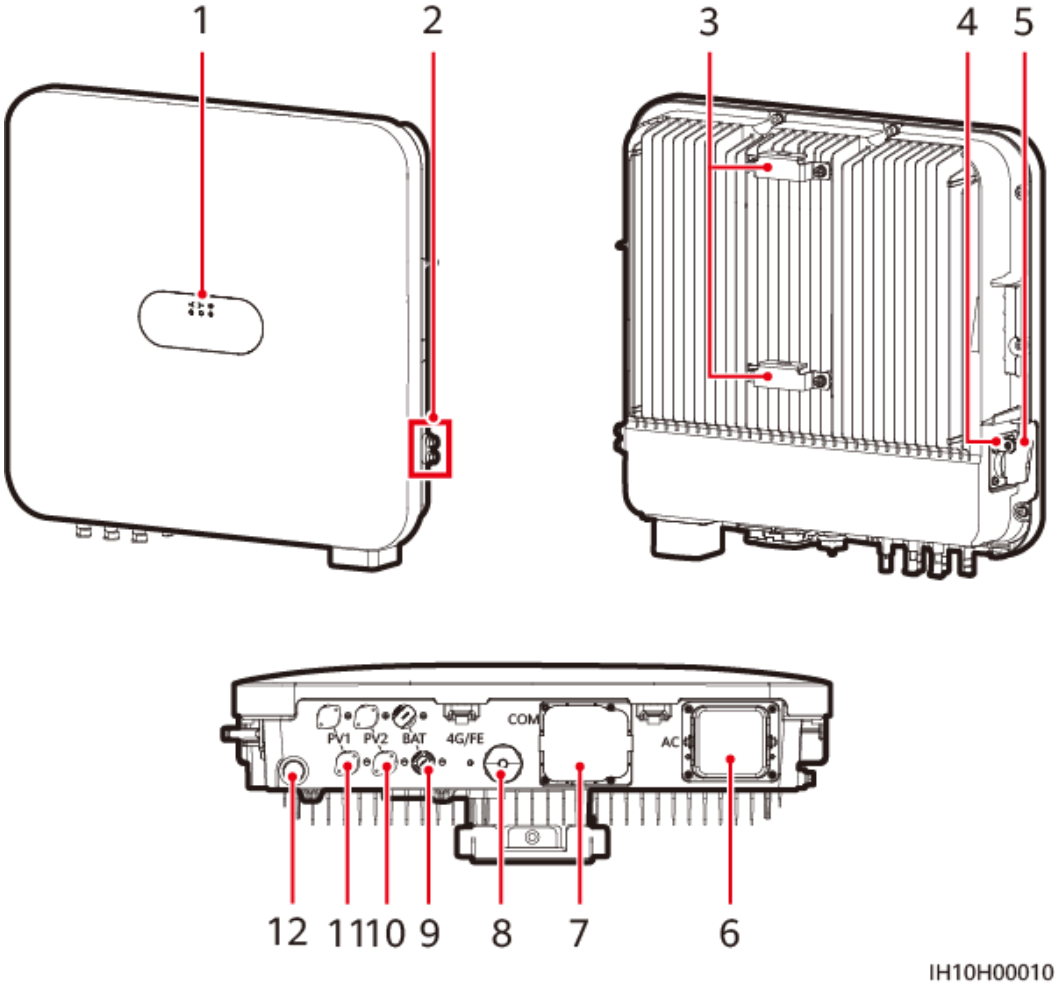

(1) LED indicators

(2) Ground screws

(3) Mounting bracket

(4) Hole for the DC switch padlock[1]

(5) DC switch (DC SWITCH)

(6) AC output port (AC)

(7) Communications port (COM)

(8) Smart Dongle port (4G/FE)

(9) Battery terminals (BAT1+ and BAT1–)

(10) DC input terminals (PV2+ and PV2–)

(11) DC input terminals (PV1+ and PV1–)

(12) Ventilation valve

 Copyright © Huawei Digital Power Technologies Co., Ltd.

Note [1]: For models used in Australia, the DC switch padlock needs to be installed according to the local standard to secure the DC switch (DC SWITCH) and prevent incorrect startup. The DC switch padlock needs to be prepared by the customer.

Indicator Description

Table 2-2 LED indicator description

Category	Status		Description
Running indication 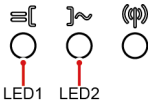	**LED1**	**LED2**	-
	Steady green	Steady green	The inverter is operating in grid-tied mode.
	Blinking green slowly (on for 1s and off for 1s)	Off	The DC is on and the AC is off.
	Blinking green slowly (on for 1s and off for 1s)	Blinking green slowly (on for 1s and off for 1s)	Both the DC and AC are on, and the inverter is off-grid.
	Off	Blinking green slowly (on for 1s and off for 1s)	The DC is off and the AC is on.
	Steady yellow	Steady yellow	The inverter is running in off-grid state.
	Blinking yellow slowly	Off	The DC is on and the inverter has no output in off-grid state.
	Blinking yellow slowly	Blinking yellow slowly	The inverter is overloaded in off-grid state.
	Off	Off	Both the DC and AC are off.
	Blinking red fast (on for 0.2s and off for 0.2s)	-	There is a DC environmental alarm, such as **String Reverse Connection**, or **Low Insulation Resistance**.

Category	Status			Description
	-	Blinking red fast		There is an AC environmental alarm, such as **Grid Undervoltage**, **Grid Overvoltage**, **Grid Overfrequency**, or **Grid Underfrequency**.
	Steady red	Steady red		A fault exists.
Communication indication 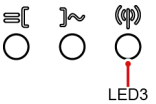	**LED3**			-
	Blinking green fast (on for 0.2s and off for 0.2s)			Communication is in progress. (When a mobile phone is connected to the inverter, the indicator first blinks green slowly, indicating that the phone is connected to the inverter.)
	Blinking green slowly (on for 1s and off for 1s)			The mobile phone is connected to the inverter.
	Off			There is no communication.
Device replacement indication	**LED1**	**LED2**	**LED3**	–
	Steady red	Steady red	Steady red	The inverter hardware is faulty and needs to be replaced.

2.4 Working Modes

The inverter has three working modes: standby, operating, and shutdown.

Figure 2-9 Working modes

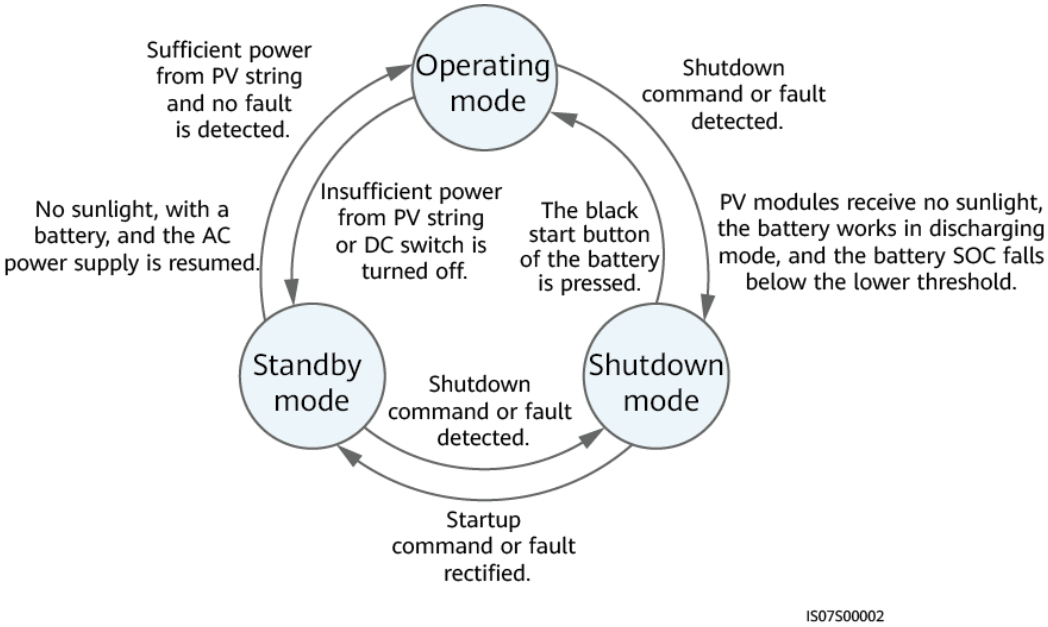

Table 2-3 Working mode description

Working Mode	Description
Standby	The inverter enters standby mode when the external environment does not meet the operating requirements. In standby mode: ● The inverter continuously detects its operation status. Once the operation conditions are met, the inverter enters operating mode. ● If the inverter receives a shutdown command or detects a fault after startup, it enters shutdown mode.
Operating	In operating mode: ● The inverter converts DC power from PV strings into AC power and feeds the power to the power grid. ● The inverter tracks the maximum power point to maximize the PV string output power. ● If the inverter receives a shutdown command or detects a fault, it enters shutdown mode. ● If the inverter detects that the output power of PV strings does not meet the requirements for grid-tied power generation and no battery is used in the system, it enters standby mode. ● If the PV modules receive no sunlight, the inverter enters shutdown mode after the batteries discharge to the lower SOC threshold.

Working Mode	Description
Shutdown	• In standby or operating mode, if the inverter receives a shutdown command or detects a fault, it enters shutdown mode. • In shutdown mode, if the inverter detects that the fault is rectified or receives a startup command, it enters standby mode. • In shutdown mode, if the black start button of the battery is pressed, the inverter enters operating mode.

2.5 Label Description

Enclosure Labels

Label	Symbol	Name	Meaning
		Delayed discharge	Residual voltage exists after the inverter is powered off. It takes 5 minutes for the inverter to discharge to the safe voltage level before maintenance.
		Operation warning	Do not remove the DC input connector or AC output connector when the inverter is running.
		Burn warning	Do not touch the inverter when it is running because its enclosure is hot.
		Refer to documentation	Reminds operators to refer to the documents delivered with the inverter.

Label	Symbol	Name	Meaning
		Electric shock warning	• High voltage exists after the inverter is powered on. Only qualified and trained electrical technicians are allowed to perform operations on the inverter. • High touch current exists after the inverter is powered on. Before powering on the inverter, ensure that the inverter is properly grounded.
(1P)PN/ITEM:XXXXXXXX Y (32P)Model:XXXXXXXX (S)SN:XXXXXXXXXXXX MADE IN CHINA	-	Serial number (SN)	Indicates the product SN.
REGKEY SN:XXXXXXXXXXXXXXXXXXXX REGKEY:XX WIFI SSID:XXXXXXXXXXXXXXXXXXXX PSW:XXXXXXXX	-	QR code for inverter Wi-Fi connection	Scan the QR code to connect to the inverter Wi-Fi.

NOTE

The labels are for reference only.

Product Nameplate

The nameplate contains the trademark, product model, important technical specifications, compliance symbols, company name, and place of origin.

Figure 2-10 Position of the nameplate

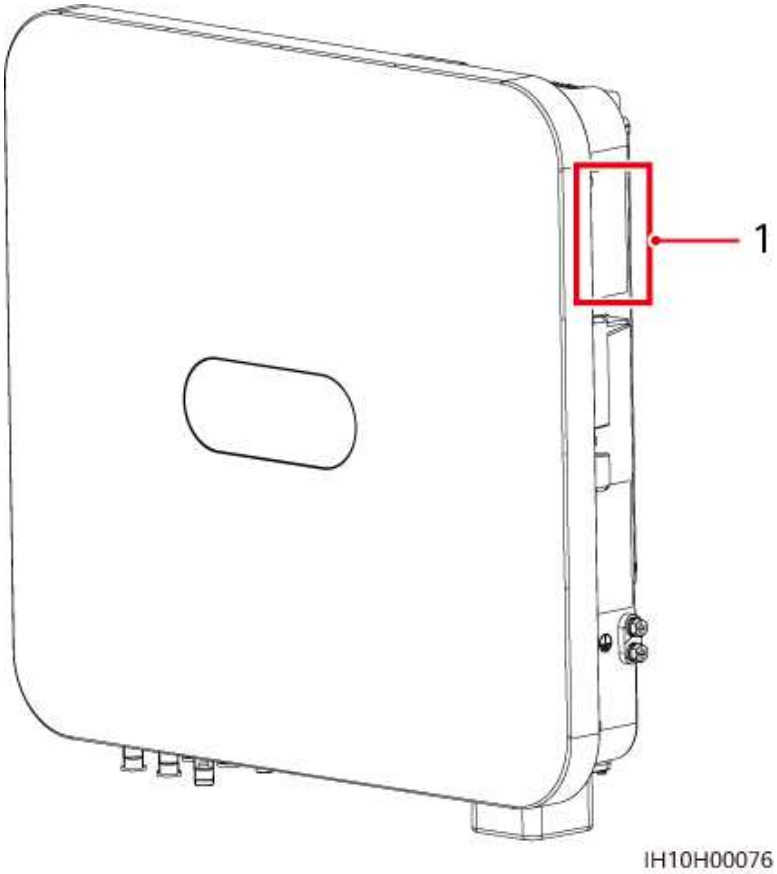

(1) Position of the nameplate

3 Storage Requirements

The following requirements shall be met if inverters are not put into use immediately:

- Do not unpack inverters.
- Keep the storage temperature at –40°C to +70°C and the humidity at 5%–95% RH.
- Store inverters in a clean and dry place and protect them from dust and moisture.
- Inverters can be stacked in a maximum of eight layers. To avoid personal injury or device damage, stack inverters with caution to prevent them from falling over.
- During the storage period, check inverters periodically (recommended: once every three months). Replace the packing materials that are damaged by insects or rodents in a timely manner.
- If inverters have been stored for two years or longer, they must be checked and tested by professionals before being put into use.

 Copyright © Huawei Digital Power Technologies Co., Ltd.

4 Installation

4.1 Installation Modes

The inverter can be wall-mounted or support-mounted.

Table 4-1 Installation modes

Installation Mode	Screw Specifications	Description
Wall mounting	M6x50 stainless steel expansion bolt	Delivered with the product
Support mounting	M6 stainless steel bolt assembly	Prepared by the customer

4.2 Installation Requirements

4.2.1 Site Selection Requirements

Basic Requirements

- The inverter is protected to IP66 and can be installed indoors or outdoors.
- Do not install the inverter in a place where personnel are easy to come into contact with its enclosure and heat sink, because these parts are hot during operation.
- Do not install the inverter in noise-sensitive areas.
- Do not install the inverter near flammable or explosive materials.
- Keep the inverter out of reach of children.
- Do not install the inverter outdoors in salt-affected areas because it will be corroded there and may cause fire. A salt-affected area refers to a region within 500 m of the coast or prone to sea breeze. Regions prone to sea breeze

vary with weather conditions (such as typhoons and monsoons) or terrains (such as dams and hills).

- Install the inverter in a well-ventilated environment to ensure good heat dissipation.
- You are advised to install the inverter in a sheltered area or install an awning over it.

Mounting Structure Requirements

- The mounting structure where the device is installed must be fire resistant.
- Do not install the inverter on flammable building materials.
- The inverter is heavy. Ensure that the installation surface is solid enough to bear the inverter weight.
- In residential areas, do not install the inverter on a drywall or wall made of similar materials which have a weak sound insulation performance because the inverter generates noise during operation.

4.2.2 Clearance Requirements

- Dimensions of the inverter and mounting holes

Figure 4-1 Dimensions of the inverter and mounting brackets

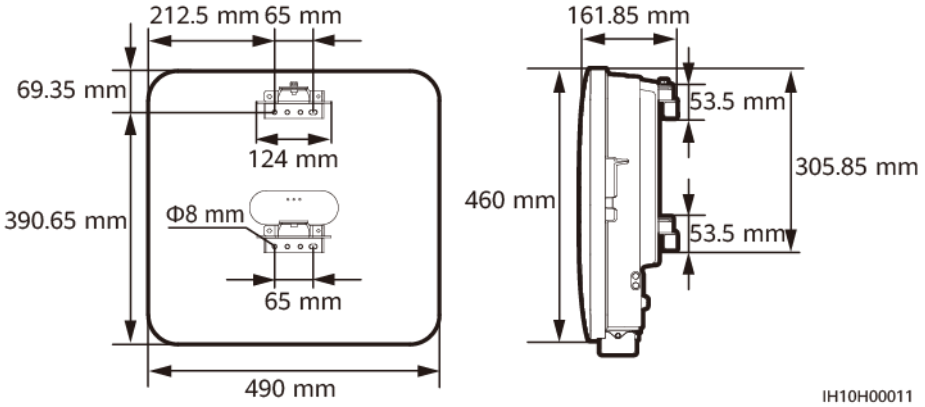

- Reserve enough clearances around the inverter to ensure sufficient space for installation and heat dissipation.

Figure 4-2 Clearances

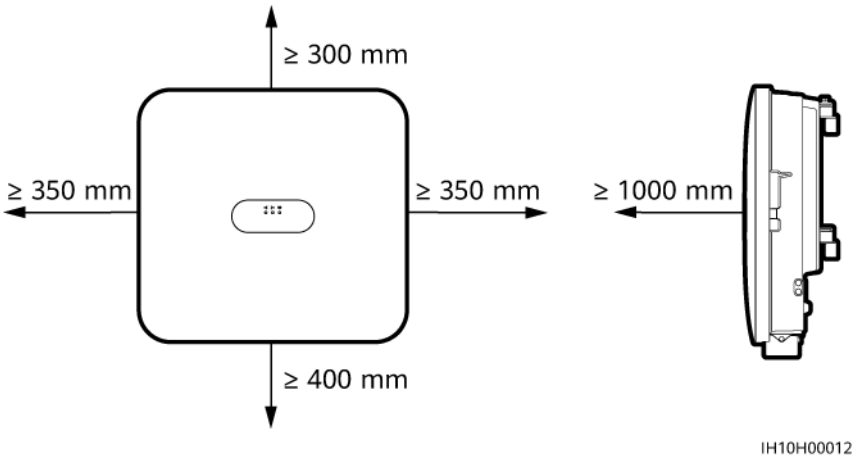

- When installing multiple inverters, install them in horizontal mode if sufficient space is available and install them in triangle mode if no sufficient space is available. Stacked installation is not recommended.

Figure 4-3 Horizontal installation mode (recommended)

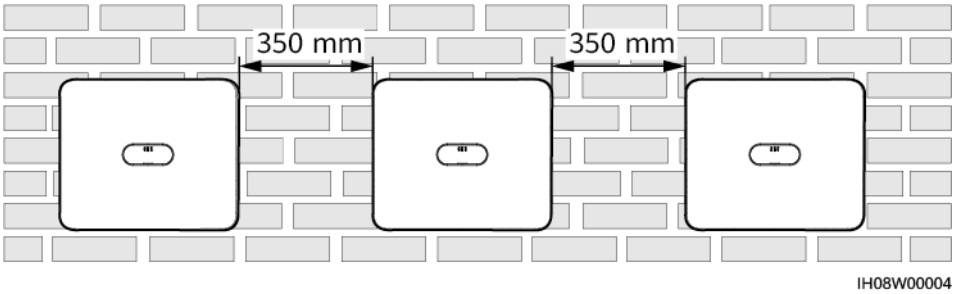

Figure 4-4 Triangle installation mode (recommended)

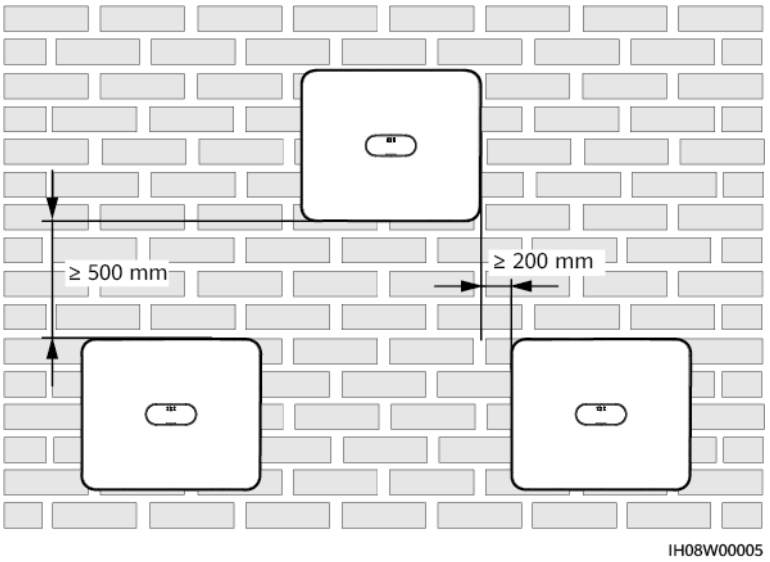

4.2.3 Angle Requirements

The inverter can be wall-mounted or support-mounted. The installation angle requirements are as follows:

- Install the inverter vertically or at a maximum back tilt of 15 degrees to facilitate heat dissipation.
- Do not install the inverter at forward tilted, excessive backward tilted, side tilted, horizontal, or upside down positions.

 Copyright © Huawei Digital Power Technologies Co., Ltd.

Figure 4-5 Installation angle

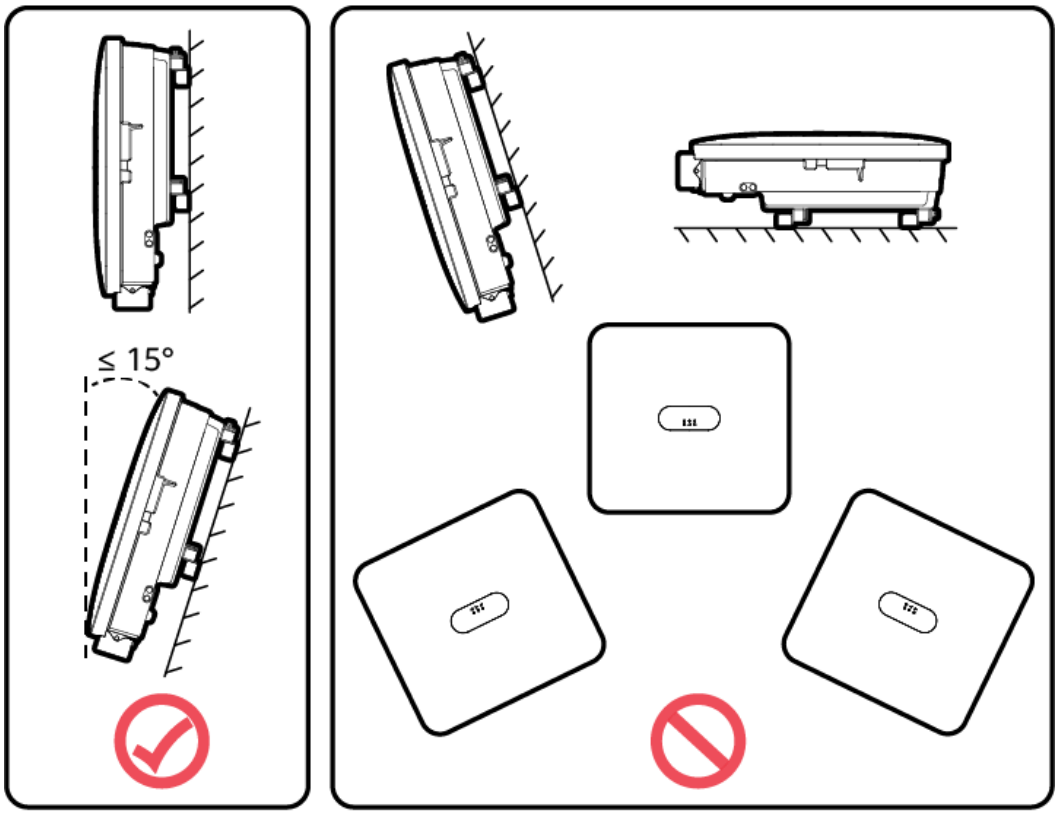

IH10H00013

4.3 Tools

Type	Tool			
Installation tool	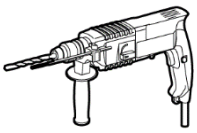 Hammer drill Drill bit: Φ8 mm, Φ6 mm	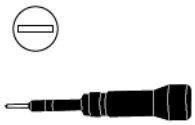 Flat-head insulated torque screwdriver	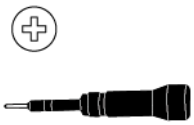 Phillips insulated torque screwdriver	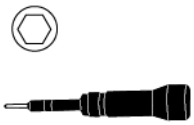 Hex insulated torque screwdriver
	Insulated torque socket wrench	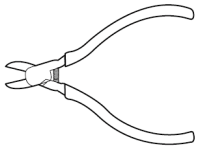 Diagonal pliers	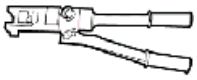 Hydraulic pliers	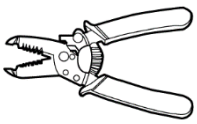 Wire stripper

 Copyright © Huawei Digital Power Technologies Co., Ltd.

Type	Tool			
	Cable tie	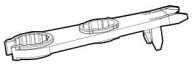 Removal wrench Model: H4TW0001	Rubber mallet	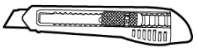 Utility knife
	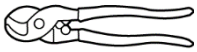 Cable cutter	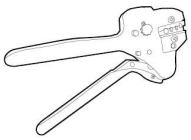 Crimping tool Model: H4TC0003	Multimeter DC voltage measurement range ≥ 1100 V DC	Vacuum cleaner
	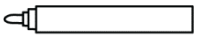 Marker	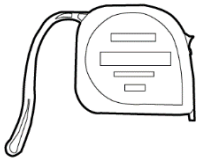 Steel measuring tape	Digital or bubble level	Cord end terminal crimping tool
	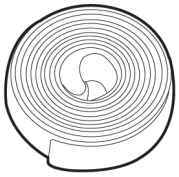 Heat shrink tubing	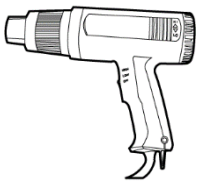 Heat gun	-	-
Personal protective equipment (PPE)	Insulated gloves	Protective gloves	Dust mask	Safety shoes

Type	Tool			
	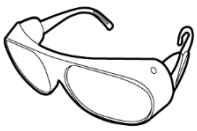 Safety goggles	-	-	-

4.4 Checking Before the Installation

Checking Outer Packing

Before unpacking the inverter, check the outer packing for damage, such as holes and cracks, and check the inverter model. If any damage is found or the inverter model is not what you requested, do not unpack the device and contact your dealer as soon as possible.

NOTE

You are advised to remove the packing materials within 24 hours before installing the inverter.

Checking Deliverables

NOTICE

After placing the equipment in the installation position, unpack it with care to prevent scratches. Keep the equipment stable during unpacking.

After unpacking the inverter, check that the deliverables are intact and complete. If any item is missing or damaged, contact your dealer.

NOTE

For details about the quantity of deliverables, see the *packing list* in the packing case.

4.5 Moving the Inverter

Procedure

Step 1 To move the inverter, two individuals are required, with one positioned on each side. Carefully lift the inverter out of its packaging case and move it to the designated installation area.

 Copyright © Huawei Digital Power Technologies Co., Ltd.

CAUTION

- Move the inverter with care to prevent device damage and personal injury.
- Do not use the wiring terminals and ports at the bottom to support any weight of the inverter.
- When you need to temporally place the inverter on the ground, use foam, paper, or other protection material to prevent damage to its enclosure.

Figure 4-6 Moving the inverter

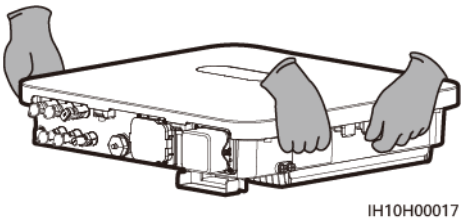

----End

4.6 Installing the Inverter on a Wall

Context

NOTE

- M6x50 expansion bolts are delivered with the inverter. If the length and amount of the bolts do not meet installation requirements, prepare M6 stainless steel expansion bolts by yourself.
- The expansion bolts delivered with the inverter are mainly used for solid brick-concrete walls. For other types of walls, prepare bolts by yourself and ensure that the wall meets the load bearing requirements of the inverter.

Figure 4-7 Expansion bolt structure

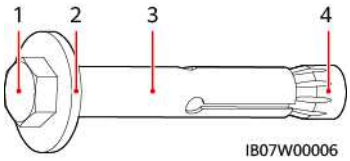

(1) Hexagonal bolt (2) Flat washer (3) Sleeve (4) Conical nut

Procedure

Step 1 Install the mounting brackets.

1. Determine the positions for drilling holes using the marking-off template, level the holes using a level, and mark the positions using a marker.

2. Drill holes at the marked positions using a hammer drill and install expansion bolts.

DANGER

Avoid drilling holes in the utility pipes or cables attached to the back of the wall.

NOTICE

- To prevent dust inhalation or contact with eyes, wear safety goggles and a dust mask when drilling holes.
- Use a vacuum cleaner to clean up dust in and around the holes, and measure the spacing. If the holes are inaccurately positioned, drill the holes again in correct positions.
- Partially tighten the expansion bolts, and then remove the hexagonal bolts and flat washers from the expansion bolts.

3. Secure the mounting brackets.

Figure 4-8 Installing the mounting brackets

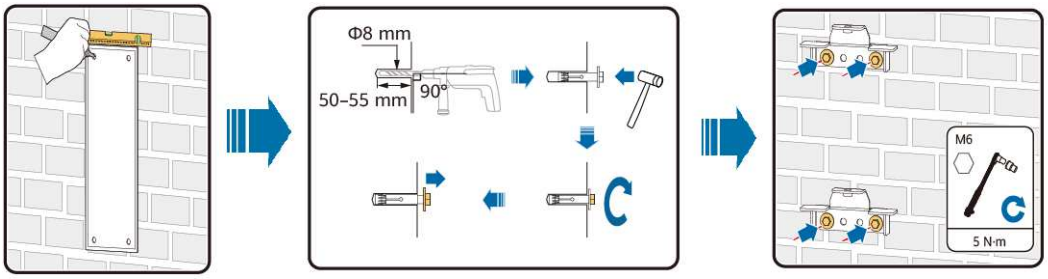

IH10H00082

Step 2 (Optional) Install a DC switch padlock.

NOTE

- For models used in Australia, the DC switch padlock needs to be installed according to the local standard to secure the DC switch (DC SWITCH) and prevent incorrect startup.
- The DC switch padlock needs to be prepared by the customer. Select a padlock based on the lock hole diameter (Φ6 mm) to ensure that the padlock can be installed smoothly.
- An outdoor waterproof padlock is recommended.
- Keep the padlock key properly.

Figure 4-9 Installing a DC switch padlock

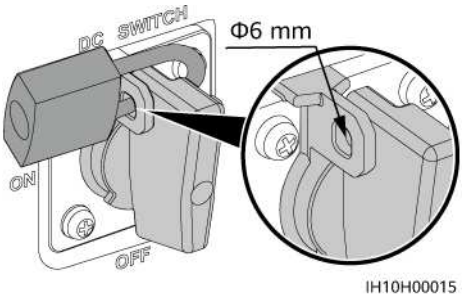

Step 3 Install the inverter on the mounting brackets.

NOTE

The M6x16 hexagonal bolts delivered with the inverter are used to secure the mounting bracket and hanging kit in the upper part.

Figure 4-10 Installing the inverter

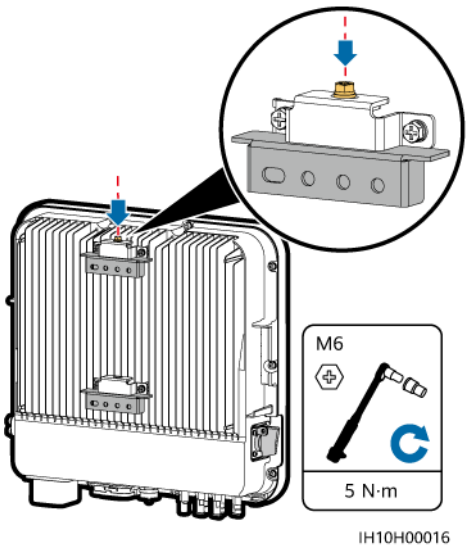

----End

4.7 Installing the Inverter on a Support

Prerequisites

Prepare M6 stainless steel bolt assemblies (including flat washers, spring washers, and M6 bolts) with appropriate lengths as well as matched flat washers and nuts based on the support specifications.

Procedure

Step 1 Install the mounting brackets.

1. Determine the positions for drilling holes using the marking-off template, and then mark the positions with a marker.

2. Drill holes using a hammer drill.

NOTE

You are advised to apply anti-rust paint on the hole positions for protection.

3. Secure the mounting brackets.

Figure 4-11 Installing the mounting brackets

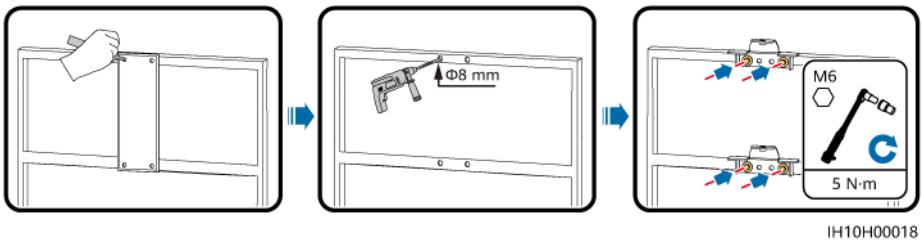

Step 2 (Optional) Install a DC switch padlock.

NOTE

- For models used in Australia, the DC switch padlock needs to be installed according to the local standard to secure the DC switch (DC SWITCH) and prevent incorrect startup.
- The DC switch padlock needs to be prepared by the customer. Select a padlock based on the lock hole diameter (Φ6 mm) to ensure that the padlock can be installed smoothly.
- An outdoor waterproof padlock is recommended.
- Keep the padlock key properly.

Figure 4-12 Installing a DC switch padlock

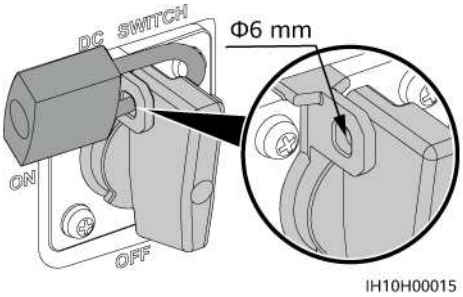

Step 3 Install the inverter on the mounting brackets.

NOTE

The M6x16 hexagonal bolts delivered with the inverter are used to secure the mounting bracket and hanging kit in the upper part.

Figure 4-13 Installing the inverter

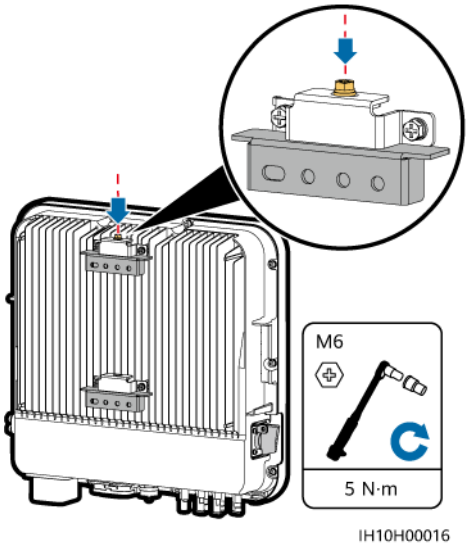

----End

5 Electrical Connections

5.1 Precautions

DANGER

When exposed to sunlight, the PV arrays supply DC voltage to the inverter. Before connecting cables, ensure that all **DC SWITCH** on the inverter are OFF. Otherwise, the high voltage of the inverter may result in electric shocks.

DANGER

- The site must be equipped with qualified fire fighting facilities, such as fire sand and carbon dioxide fire extinguishers.
- Wear personal protective equipment and use dedicated insulated tools to avoid electric shocks or short circuits.

WARNING

- The equipment damage caused by incorrect cable connections is beyond the warranty scope.
- Only certified electrician can perform electrical terminations.
- Operation personnel must wear PPE when connecting cables.
- Before connecting cables to ports, leave enough slack to reduce the tension on the cables and prevent poor cable connections.

 Copyright © Huawei Digital Power Technologies Co., Ltd.

CAUTION

- Stay away from the equipment when preparing cables to prevent cable scraps from entering the equipment. Cable scraps may cause sparks and result in personal injury and equipment damage.

NOTE

The cable colors shown in the electrical connection diagrams provided in this section are for reference only. Select cables in accordance with local cable specifications (green-and-yellow cables are only used for protective earthing).

5.2 Preparing Cables

Figure 5-1 Inverter cable connections (dashed boxes indicate optional components)

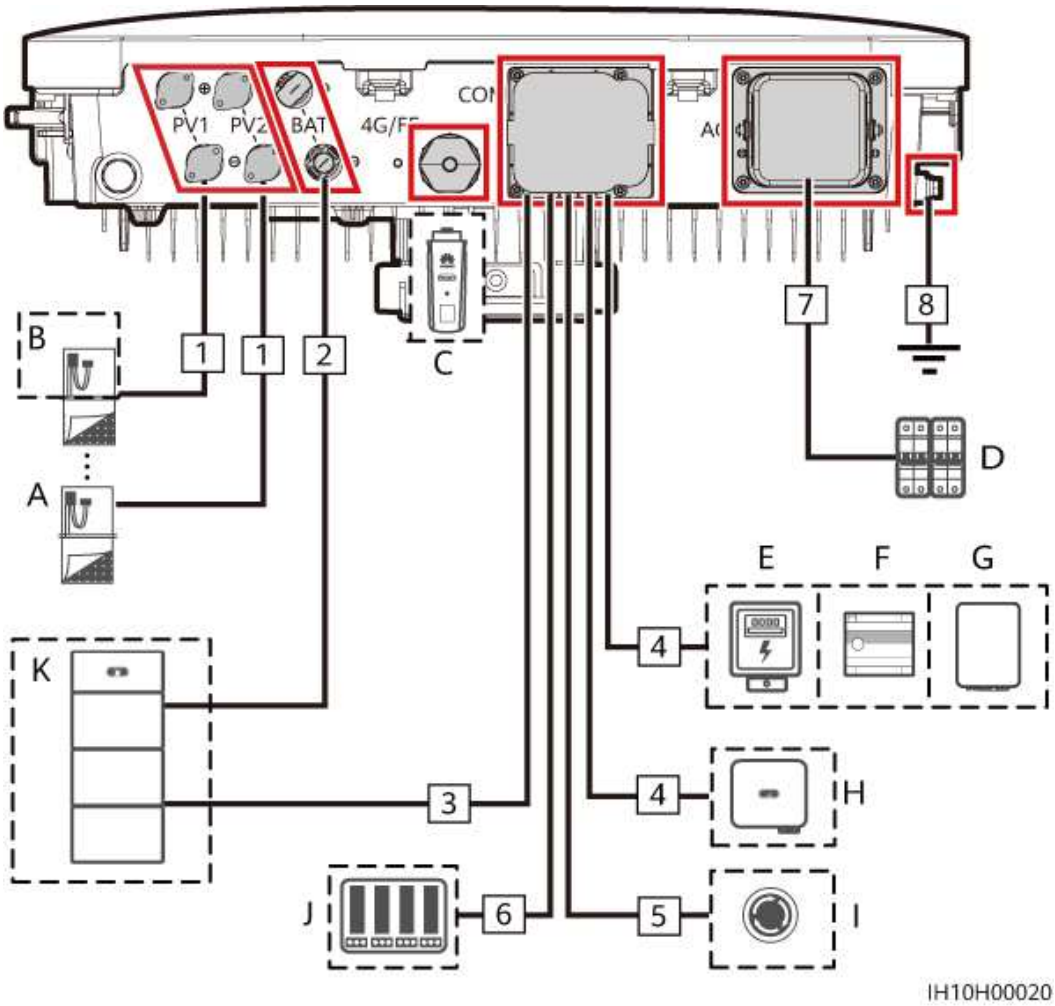

Table 5-1 Component description

No.	Component	Description	Source
A	PV module	• A PV string consists of PV modules connected in series. • The inverter supports two PV string inputs.	Prepared by the customer
B	Smart PV Optimizer	Supported models: SUN2000-(600W-P, 450W-P2) and SUN2000-600W-PA0[4]	Purchased from Huawei
C	Smart Dongle[1]	Supported models: • WLAN-FE Smart Dongle: SDongleA-05 • 4G Smart Dongle: SDongleB-06	Purchased from Huawei
D	AC switch	To ensure that the inverter can be safely disconnected from the power grid when an exception occurs, connect an AC switch to the AC side of the inverter. Select an appropriate AC switch in accordance with local industry standards and regulations. Recommended switch specifications: It is recommended that you use a three-phase AC circuit breaker with a rated voltage greater than or equal to 415 V AC and a rated current of: • 5K and 6K: 16 A • 8K: 25 A • 10K and 12K: 32 A	Prepared by the customer
E	Power meter[2]	Recommended models: DTSU666-H, DTSU71, DHSU1079-CT, and YDS60-C24[3]	Purchased from Huawei
F	SmartAssistant	An energy management device used in a residential PV system.	Purchased from Huawei
G	Smart Guard	The Smart Guard can be used to switch between the on-grid and off-grid states of the inverter. Supported models: SmartGuard-63A-T0 and SmartGuard-63A-AUT0	Purchased from Huawei

No.	Component	Description	Source
H	Inverter	Select a proper model as required.	Purchased from Huawei
I	Rapid shutdown switch	Select a proper model as required.	Prepared by the customer
J	Ripple control device	Select the device that meets the power grid scheduling requirements.	Provided by the local power grid company
K	Battery	The inverter can connect to the LUNA2000.	Purchased from Huawei

Note [1]: For details about how to operate a WLAN-FE Smart Dongle SDongleA-05, see **SDongleA-05 Smart Dongle Quick Guide (WLAN-FE)**. For details about how to operate a 4G Smart Dongle SDongleB-06, see **SDongleB-06 Smart Dongle Quick Guide (4G)**. You can obtain these documents at **https://support.huawei.com/enterprise** by searching for models.

Note [2]: For details about how to operate a power meter, see **DTSU666-H 100 A and 250 A Smart Power Sensor User Manual**, **DTSU71 Smart Power Sensor Quick Guide**, **DHSU1079-CT Smart Power Sensor Quick Guide**, or **YDS60-C24 Smart Power Sensor Quick Guide**.

Note [3]: Retain the default baud rates for the power meters. If they are changed, the power meters may go offline, generate alarms, or affect the inverter output power.

Note [4]:

- The SUN2000-(600W-P, 450W-P2) and SUN2000-600W-PA0 cannot be used together for the same inverter.
- The SUN2000-600W-PA0 optimizers apply only to the scenarios where optimizers are configured for all PV modules connected to an inverter or MPPT.

Table 5-2 Cable description

No.	Name	Type	Conductor Cross-Sectional Area	Outer Diameter	Source
1	DC input power cable	Common outdoor PV cable in the industry	4–6 mm^2	5.5–9 mm	Prepared by the customer

No.	Name	Type	Conductor Cross-Sectional Area	Outer Diameter	Source
2	(Optional) Battery cable	Common outdoor PV cable in the industry	4–6 mm^2	5.5–9 mm	Prepared by the customer
3	(Optional) Battery signal cable	Cat 5e outdoor shielded network cable	-	-	Purchased from Huawei
4	(Optional) RS485 communications cable	Outdoor shielded twisted pair cable	0.2–1 mm^2	4–11 mm	Prepared by the customer
5	(Optional) Signal cable to the rapid shutdown switch				
6	(Optional) Grid scheduling signal cable				
7	AC output power cable	Outdoor copper cable	4–6 mm^2	10–21 mm	Prepared by the customer
8	PE cable	Single-core outdoor copper cable	4–6 mm^2	10–21 mm	Prepared by the customer

 Copyright © Huawei Digital Power Technologies Co., Ltd.

NOTE

- The minimum cable cross-sectional area must meet local standards. Aluminum cables are prohibited.
- The factors that affect cable selection include the rated current, cable type, routing mode, ambient temperature, and maximum expected line loss.

5.3 Connecting a PE Cable

Precautions

DANGER

- Ensure that the PE cable is securely connected. Otherwise, electric shocks may occur.
- Do not connect the neutral wire to the enclosure as a PE cable. Otherwise, electric shocks may occur.

NOTE

- The PE point at the AC output port is used only as a PE equipotential bonding point, and cannot substitute for the PE point on the enclosure.
- It is recommended that silicone grease or paint be applied around the ground terminal after the PE cable is connected.
- You can enable or disable phase-to-ground short-circuit protection on the app (choose **Settings > Feature parameters > Phase-to-ground short-circuit protection**) to address the situation in which a phase wire is short-circuited to PE. If this function is disabled, the inverter detects the alarm and can connect to the power grid and generate power normally. This function applies only to the SUN2000-5K-MAP0-ZH, SUN2000-6K-MAP0-ZH, SUN2000-8K-MAP0-ZH, SUN2000-10K-MAP0-ZH, and SUN2000-12K-MAP0-ZH.

Additional Information

The inverter provides the grounding detection function. This function is used to check whether the inverter is properly grounded before the inverter starts, or check whether the ground cable is disconnected when the inverter is running. This function is only available under limited conditions. To ensure the safe operation of the inverter, properly ground the inverter according to the connection requirements of the PE cable. For some power grid types, if the output side of the inverter is connected to an isolation transformer, ensure that the inverter is properly grounded and then set **Grounding Exception Detection** to **Disable** so that the inverter can run properly.

- According to IEC 62109, to ensure the safe operation of the inverter in the case of PE cable damage or disconnection, properly connect the PE cable of the inverter and ensure that it meets at least one of the following requirements before the grounding detection function becomes invalid.
  - If the PE terminal of the AC connector is not connected, the PE cable on the enclosure must be a single-core outdoor copper cable with a cross-sectional area of at least 10 mm^2.

  - Use cables with the same diameter as the AC output power cable and ground the PE terminal on the AC connector and the ground screws on the enclosure.
- In some countries and regions, the inverter must have additional ground cables. In this case, use cables with the same diameter as the AC output power cable to ground the PE terminal of the AC connector and the ground screws of the enclosure, respectively.

Procedure

Step 1 Crimp an OT terminal.

NOTICE

- Avoid scratching the core wire when stripping a cable.
- The cavity formed after the conductor crimp strip of the OT terminal is crimped must wrap the core wire completely. The core wire must make close contact with the OT terminal.
- Wrap the wire crimping area with heat shrink tubing or insulation tape. The heat shrink tubing is used as an example.
- Use a heat gun carefully to avoid heat damage to the equipment.

Figure 5-2 Crimping an OT terminal

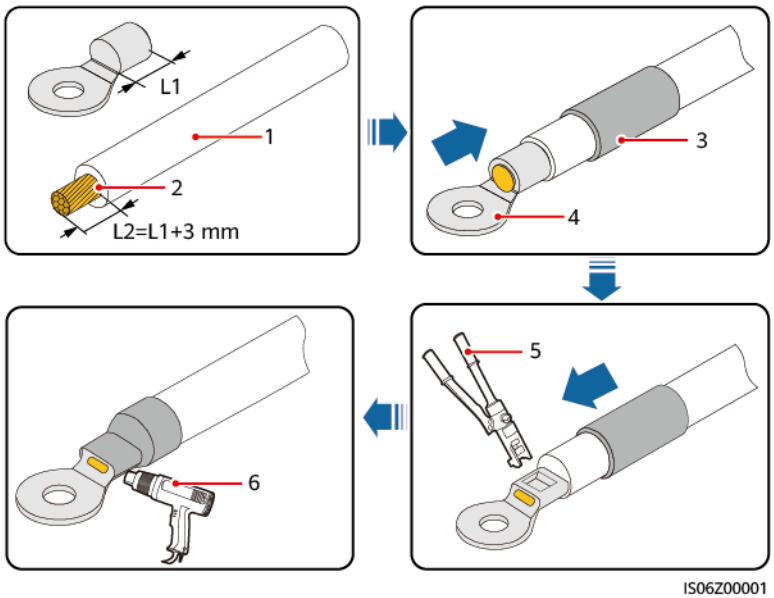

(1) Cable	(2) Core wire	(3) Heat shrink tubing
(4) OT terminal	(5) Hydraulic pliers	(6) Heat gun

Step 2 Connect the PE cable.

Figure 5-3 Connecting the PE cable

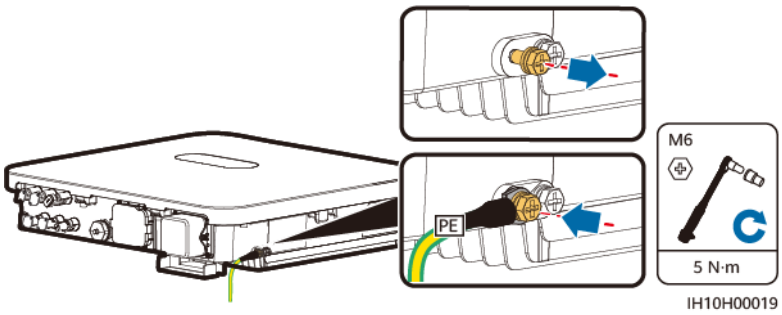

----End

5.4 Connecting an AC Output Power Cable

Precautions

It is recommended that a three-phase AC switch be installed on the AC side of the inverter. To ensure that the inverter can safely disconnect itself from the power grid when an exception occurs, select a proper overcurrent protection device in compliance with local power distribution regulations.

WARNING

- Do not connect loads between an inverter and an AC switch that directly connects to the inverter. Otherwise, the switch may trip by mistake.
- If an AC switch is used with specifications beyond local standards, regulations, or the Company's recommendations, the switch may fail to turn off in a timely manner in case of exceptions, causing serious faults.

CAUTION

Each inverter shall be equipped with an AC output switch. Multiple inverters shall not connect to the same AC switch.

The inverter is installed with an integrated residual current monitoring unit. When the inverter detects that residual current exceeds the permitted value, it disconnects from the power grid quickly.

NOTICE

- If the external AC switch provides the leakage protection function, the rated residual operating current must be greater than or equal to 100 mA.
- If multiple inverters are connected to the master leakage protection device through their external AC switches, the rated residual operating current of the device must be greater than or equal to the number of inverters x 100 mA.
- The AC switch cannot be a knife switch.

Procedure

Step 1 Connect the AC output power cable to the AC connector.

NOTICE

- Ensure that the cable jacket is inside the connector.
- Insert the exposed core wires completely into the holes.
- Connect the AC output cable securely. Otherwise, the device may fail to operate properly or the AC connector may be damaged.
- Ensure that the cable is not twisted.

NOTICE

Strip the insulation layers of the AC output power cable by the recommended length (17–19 mm) to ensure that the cable conductors are completely inside the conductor insertion points and no insulation layer is pressed into the conductor insertion points. Tighten the cable conductors to a torque of 2.8–3.2 N·m. Otherwise, the device may fail to run properly or be damaged during operation.

Figure 5-4 Connecting the AC output power cable to the AC connector

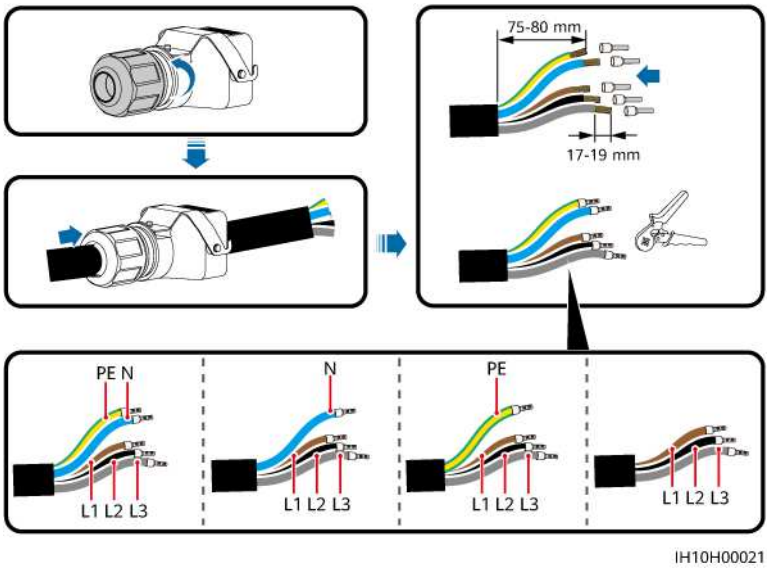

NOTE

The cable colors shown in the figures are for reference only. Select an appropriate cable according to the local standards.

Step 2 Connect the AC connector together with the AC output power cable to the AC output port.

NOTICE

Ensure that the AC connector is connected securely.

Figure 5-5 Securing the AC connector

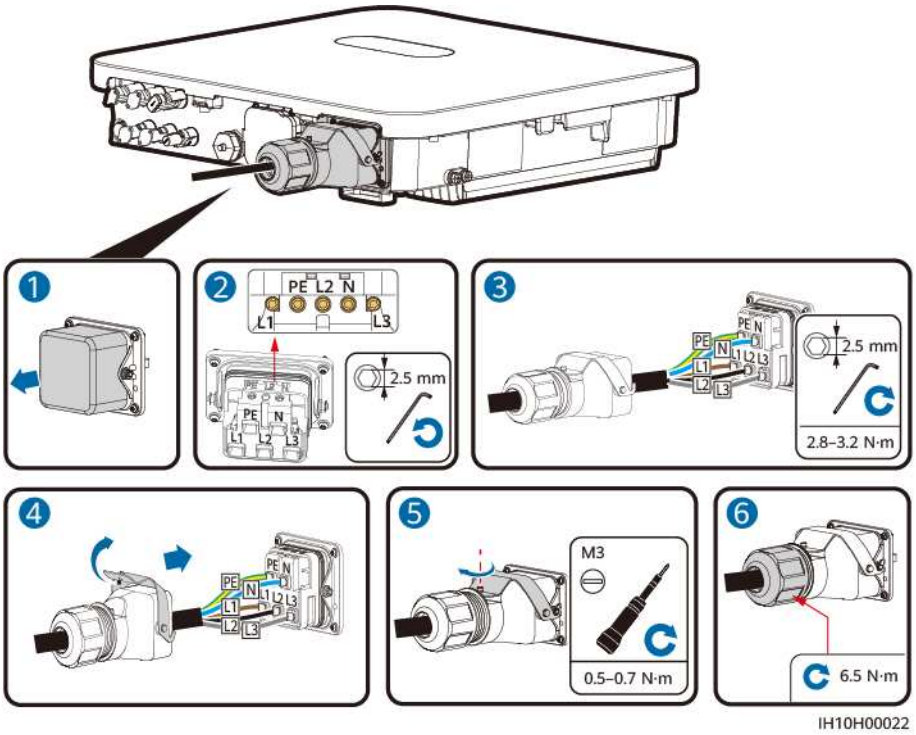

Step 3 Check the route of the AC output power cable.

Figure 5-6 Cabling requirements

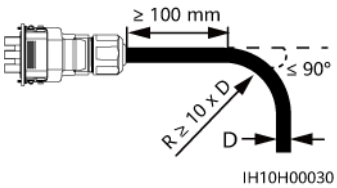

----End

Disconnection

Perform the steps in reverse order to disconnect the cable.

5.5 Connecting DC Input Power Cables

Precautions

DANGER

- Before connecting the DC input power cables, ensure that the DC voltage is within the safe range (lower than 60 V DC) and that the DC SWITCH on the inverter is OFF. Otherwise, the high voltage may result in electric shocks.
- When the inverter is operating, do not perform maintenance or operations on the DC input power cables, such as connecting or disconnecting a PV string or a PV module in the PV string. Otherwise, electric shocks may occur.
- If no PV string connects to a DC input terminal of the inverter, do not remove the waterproof cap from the DC input terminal. Otherwise, the protection level of the inverter will decrease.

WARNING

Ensure that the following conditions are met. Otherwise, the inverter may be damaged or even a fire may occur.

- PV modules connected in series in each PV string are of the same specifications.
- The maximum open-circuit voltage of each PV string must be lower than or equal to 1100 V DC under any circumstances.
- The polarities of electric connections are correct on the DC input side. The positive and negative terminals of a PV string connect to corresponding positive and negative DC input terminals of the inverter.
- If a DC input power cable is reversely connected, do not immediately operate on the DC SWITCH or positive/negative connectors. Wait until the night when solar irradiance declines and the PV string current drops to below 0.5 A. Then set the DC SWITCH to OFF, remove the positive and negative connectors, and correct the polarities of the DC input power cable.

WARNING

During the installation of PV strings and the inverter, the positive or negative terminals of PV strings may be short-circuited to ground if the power cables are not properly installed or routed. In this case, an AC or DC short circuit may occur and damage the inverter. The resulting device damage is not covered under any warranty.

 Copyright © Huawei Digital Power Technologies Co., Ltd.

NOTICE

The output of the PV string connected to the inverter cannot be grounded. Ensure that the PV module output is well insulated to ground.

Terminal Description

Figure 5-7 Terminals

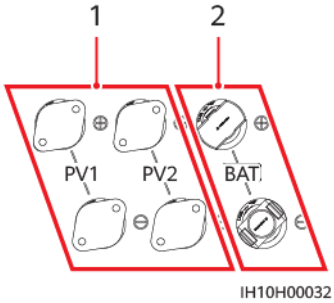

(1) DC input terminals

(2) Battery terminals

Figure 5-8 Connection

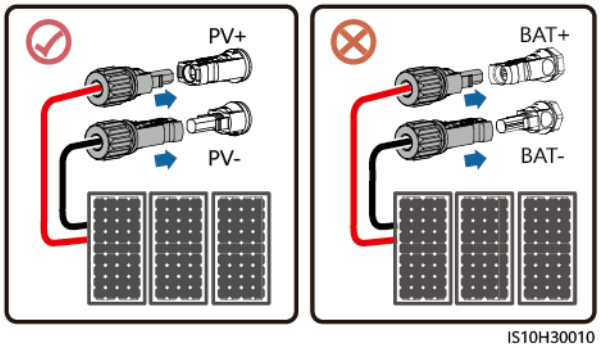

Procedure

Step 1 Assemble DC connectors.

CAUTION

Use the positive and negative metal terminals and DC connectors delivered with the inverter. Using incompatible positive and negative metal terminals and DC connectors may result in serious consequences. The resulting device damage is not covered by the product warranty.

 Copyright © Huawei Digital Power Technologies Co., Ltd.

NOTICE

- Cables with high rigidity, such as armored cables, are not recommended as DC input power cables, because poor contact may be caused by the bending of the cables.
- Before assembling DC connectors, label the cable polarities correctly to ensure correct cable connections.
- After crimping the positive and negative metal terminals, pull the DC input power cables back to ensure that they are connected securely.
- Insert the crimped metal terminals of the positive and negative power cables into the appropriate positive and negative connectors. Then pull back the DC input power cables to ensure that they are connected securely.

NOTE

- The multimeter must have a DC voltage range of at least 1100 V. If the voltage is a negative value, the DC input polarity is incorrect. Rectify the connection. If the voltage is greater than 1100 V, too many PV modules are connected to the same string. Remove some PV modules.
- If PV strings are configured with optimizers, check the cable polarities by referring to the *Smart PV Optimizer Quick Guide*.

Figure 5-9 Assembling DC connectors

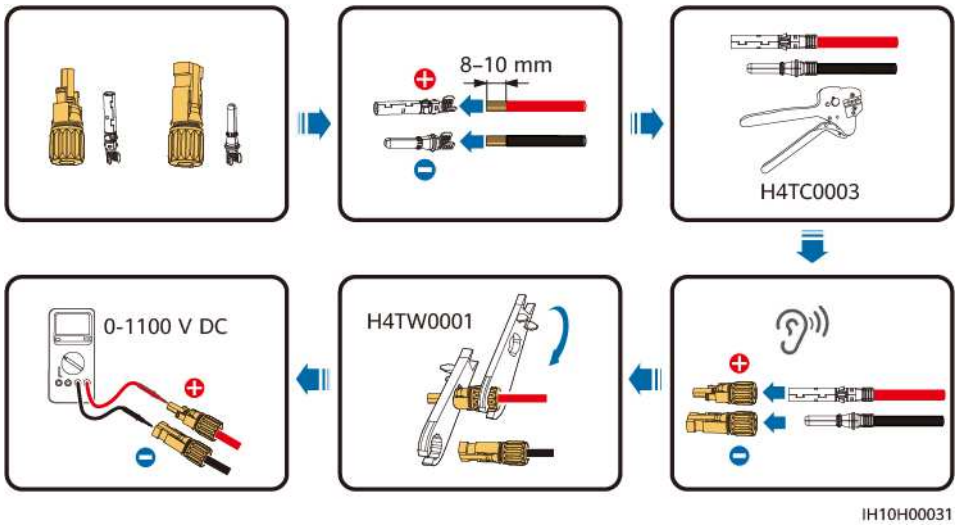

Step 2 Insert the positive and negative connectors into corresponding DC input terminals on the inverter.

WARNING

Before inserting the positive and negative connectors into the positive and negative DC input terminals of the inverter, ensure that the DC SWITCH is set to OFF.

 Copyright © Huawei Digital Power Technologies Co., Ltd.

NOTICE

During DC input power cabling, leave at least 50 mm of slack. The axial tension on PV connectors must not exceed 80 N. Radial stress or torque must not be generated on PV connectors.

NOTICE

If a DC input power cable is reversely connected and the DC SWITCH is set to ON, do not immediately operate on the DC SWITCH or the positive/negative connectors. Otherwise, the device may be damaged. The resulting device damage is not covered by the product warranty. Wait until the night when solar irradiance declines and the PV string current drops to below 0.5 A. Then set the DC SWITCH to OFF, remove the positive and negative connectors, and correct the polarities of the DC input power cable.

Figure 5-10 Connecting DC input power cables

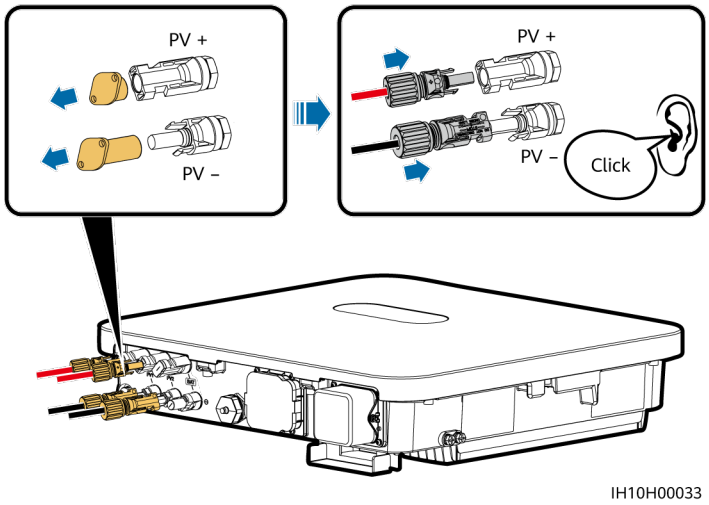

----End

Removing DC Connectors

WARNING

Before removing the positive and negative connectors, ensure that the DC SWITCH is set to OFF.

To remove the positive and negative connectors from the inverter, insert an open-end wrench into the notch and press the wrench with an appropriate force.

 Copyright © Huawei Digital Power Technologies Co., Ltd.

Figure 5-11 Removing a DC connector

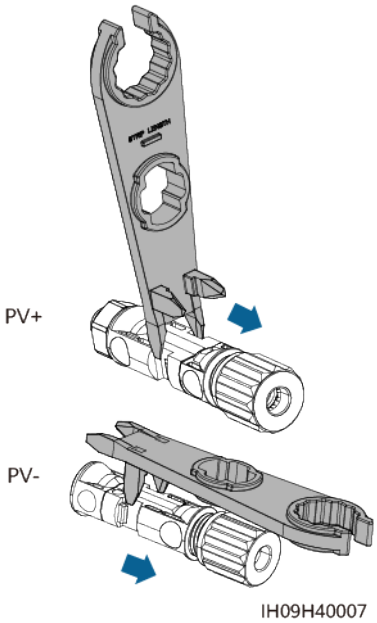

5.6 (Optional) Connecting Battery Cables

Precautions

DANGER

- Battery short circuits may cause personal injury. The high transient current generated by a short circuit may release a surge of power and cause fire.
- Do not connect, disconnect, or perform other maintenance operations on battery cables when the inverter is running. Otherwise, electric shocks may occur.
- Before connecting the battery cables, ensure that the **DC SWITCH** on the inverter and all the switches connecting to the inverter are **OFF**, and that the inverter has no residual electricity. Otherwise, the high voltage of the inverter and battery may result in electric shocks.
- If no battery connects to the inverter, do not remove the waterproof covers from the battery terminals. Otherwise, the ingress protection (IP) rating of the inverter will be affected. If a battery connects to the inverter, keep the waterproof covers properly and reinstall them immediately after removing the connectors.

 Copyright © Huawei Digital Power Technologies Co., Ltd.

WARNING

- Do not connect loads between the inverter and the battery.
- Ensure that the battery cables are connected to the battery terminals of the inverter. If a battery cable is connected incorrectly to the DC input terminal of the inverter, the inverter may be damaged or even a fire may occur.
- The battery cables must be connected correctly. That is, the positive and negative terminals of the battery connect to the positive and negative battery terminals of the inverter, respectively. Otherwise, the inverter may be damaged or even a fire may occur.

WARNING

If power cables are not installed or routed as required during the installation of the inverter and the battery, the positive or negative terminal of the battery will be short-circuited to ground. In this case, an AC or DC short circuit may occur and damage the inverter. The resulting device damage is not covered by the product warranty.

Procedure

Step 1 Assemble the positive and negative connectors by referring to **5.5 Connecting DC Input Power Cables**.

DANGER

- The battery voltage will result in serious injury. Use dedicated insulation tools to connect cables.
- Ensure that cables are connected correctly between the terminals of the battery and the battery switch, and between the battery switch and the battery terminals of the inverter.

NOTICE

Cables with high rigidity, such as armored cables, are not recommended as battery cables, because poor contact may be caused by the bending of the cables.

Step 2 Insert the positive and negative connectors into corresponding battery terminals on the inverter.

NOTICE

After the positive and negative connectors snap into place, pull the battery cables back to ensure that they are connected securely.

 Copyright © Huawei Digital Power Technologies Co., Ltd.

Figure 5-12 Connecting battery cables

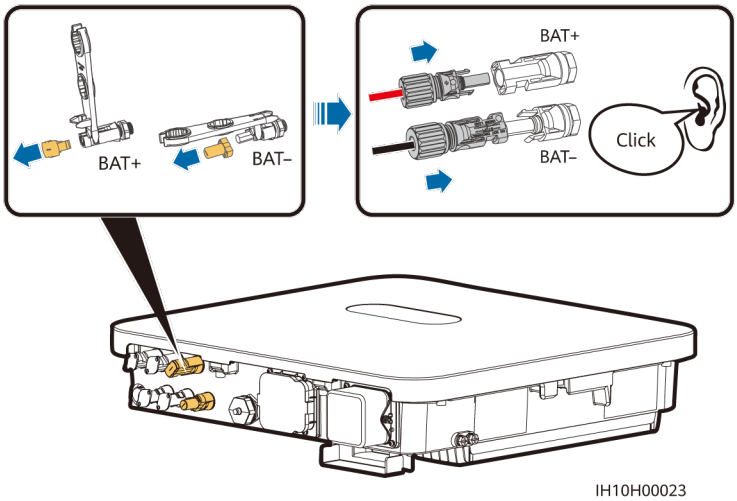

----End

5.7 Connecting Signal Cables

Communications Ports

NOTICE

- When laying out a signal cable, separate it from power cables and keep it away from strong interference sources to prevent communication interruption.
- Ensure that the signal cable jacket is inside the connector and surplus core wires are cut off flush with the edge of the cable jacket. Insert the exposed core wires completely into the conductor insertion points. Ensure that the cable is connected securely.
- Use rubber plugs to fill the cable holes where no cables are routed through the waterproof rubber rings, and tighten the locking caps to the recommended torque.

Figure 5-13 COM: 18-pin terminal

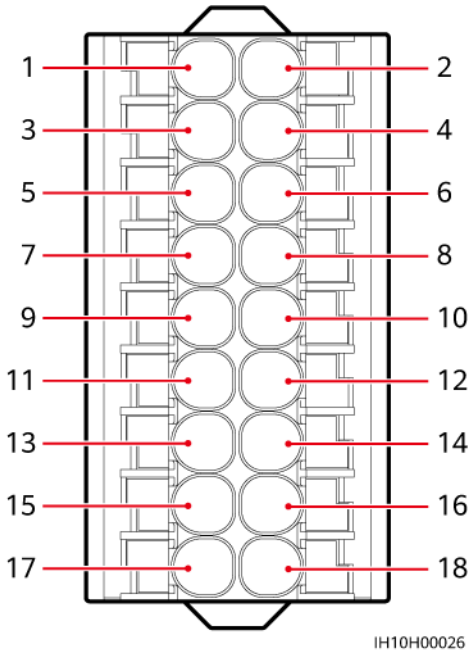

Pin	Definition	Function	Description	Pin	Definition	Function	Description
1	485A1	RS485A, RS485 differential signal+	Used for cascading inverters or connecting to the RS485 signal port of the SmartAssistant or Smart Guard. When cascaded inverters and the SmartAssistant coexist, they share the 485A1 and 485B1 ports.	2	CANA1	CAN differential signal, high	Reserved port
3	485B1	RS485B, RS485 differential signal–		4	CANA2	CAN differential signal, low	
5	PE	Shield layer grounding	-	6	PE	Shield layer grounding	-
7	DIN6	Digital input signal 6+	Used as the feedback signal port for the Smart Guard	8	DIN1	Digital input signal 1+	Connecting to the dry contact for power grid scheduling

Pin	Definition	Function	Description	Pin	Definition	Function	Description
9	GND	GND of DIN6	-	10	DIN2	Digital input signal 2+	
11	485A2	RS485A, RS485 differential signal+	Connecting to the RS485 signal port of a power meter	12	DIN3	Digital input signal 3+	
13	485B2	RS485B, RS485 differential signal–		14	DIN4	Digital input signal 4+	Connecting to the dry contact for power grid scheduling or the ripple control receiver for load power control
15	GND_OUT	12 V power output–	Reserved port	16	GND	GND of DIN1, DIN2, DIN3, DIN4, or DIN5	Connecting to GND of DIN1, DIN2, DIN3, DIN4, or DIN5
17	12V_OUT	12 V power output+	Reserved port	18	DIN5	Rapid shutdown	Used for the rapid shutdown DI signal or connecting to the signal cable of an NS protection device

Figure 5-14 COM: RJ45 network port

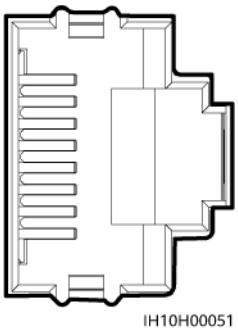

NOTE

The RJ45 network port is located in the COM port and is used to connect to a battery.

Communication Networking Mode

- Smart Dongle networking

Figure 5-15 Smart Dongle networking (the components in the dashed boxes are optional)

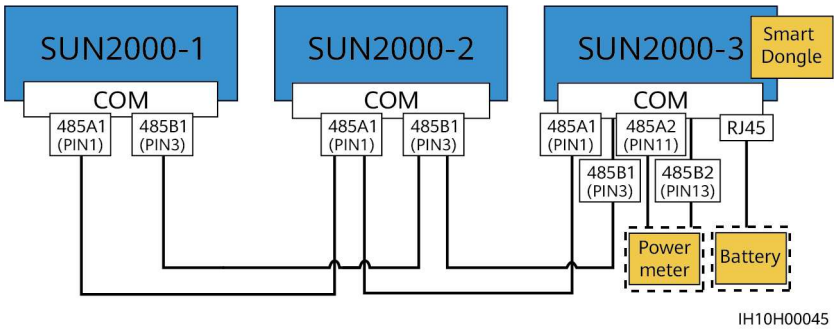

NOTE

- A power meter is required for export limitation. Select a power meter based on the site requirements.
- The power meter and the Smart Dongle must be connected to the same inverter.
- In the PV+ESS scenario, a maximum of three inverters can be cascaded. The inverter connected to the Smart Dongle must be connected to the ESS. Whether other inverters are connected to the ESS is optional.

- SmartAssistant networking

Figure 5-16 SmartAssistant networking (the component in the dashed box is optional)

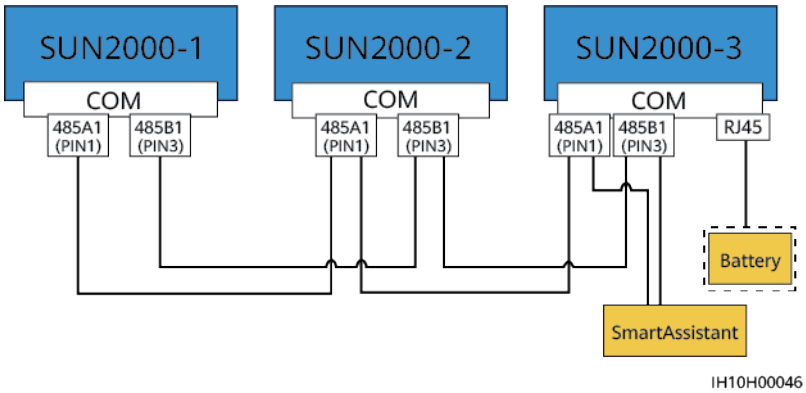

- Smart Guard networking

Figure 5-17 Smart Guard networking (the component in the dashed box is optional)

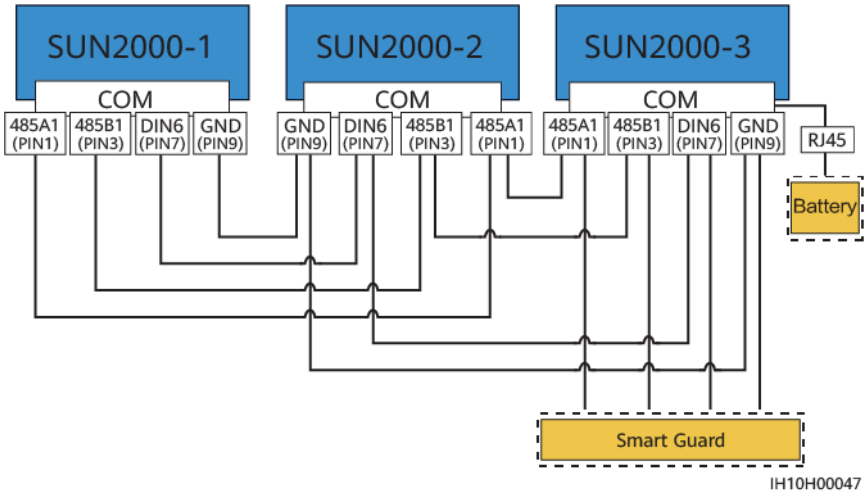

Requirements for Signal Cables

NOTICE

- Ensure that the protection layer of the cable is in the connector. The surplus core should be cut off from the protection layer.
- Ensure that the exposed core is totally inserted into the cable hole.
- Ensure that the signal cables are connected securely.
- Ensure that the cables are not twisted.
- If multiple signal cables need to be connected to a single connector, ensure that the outer diameters of the signal cables are the same.

Figure 5-18 Crimping two signal cables

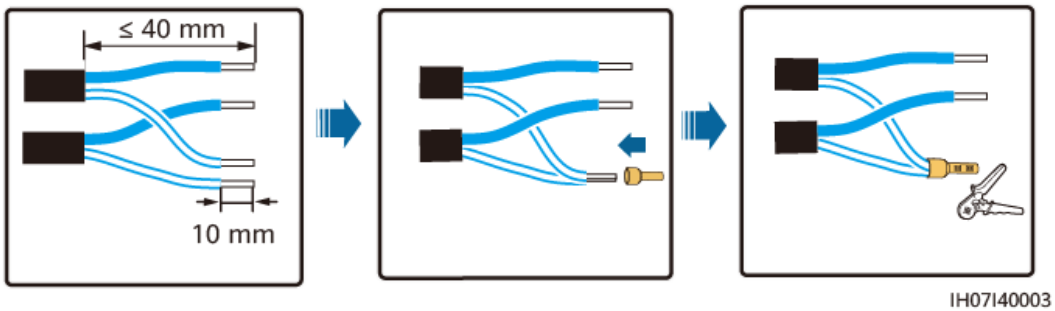

5.7.1 Connecting RS485 Communications Cables (Inverter Cascading)

Procedure

Step 1 Connect the signal cable to the signal cable terminal.

 Copyright © Huawei Digital Power Technologies Co., Ltd.

Figure 5-19 Installing the cable

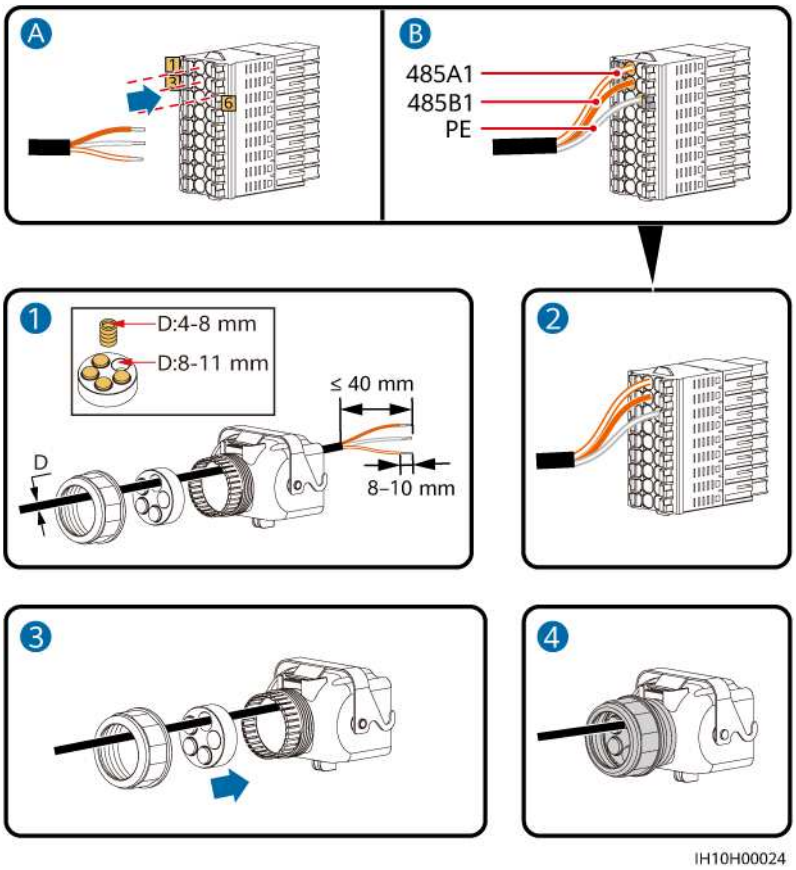

Step 2 Connect the signal cable connector to the COM port.

Figure 5-20 Securing the signal cable connector

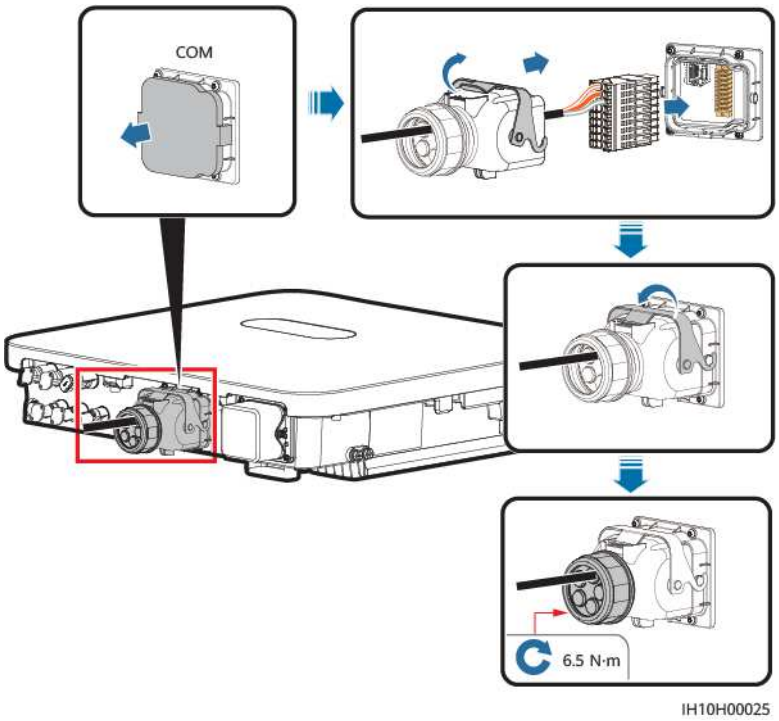

----End

5.7.2 Connecting RS485 Communications Cables (Power Meter)

Cable Connection

The following figures show the cable connections between the inverter and DTSU666-H and YDS60-C24 power meters.

NOTICE

When connecting the CT communications cables of the power meter, ensure that the phase sequence on the inverter is the same as that on the power meter, as shown in the following figures.

NOTE

The cable connections between the DTSU71 or DHSU1079-CT power meter and the inverter are the same as those between the DTSU666-H power meter and the inverter.

Figure 5-21 DTSU666-H three-phase, three-wire cable connection (Smart Dongle networking)

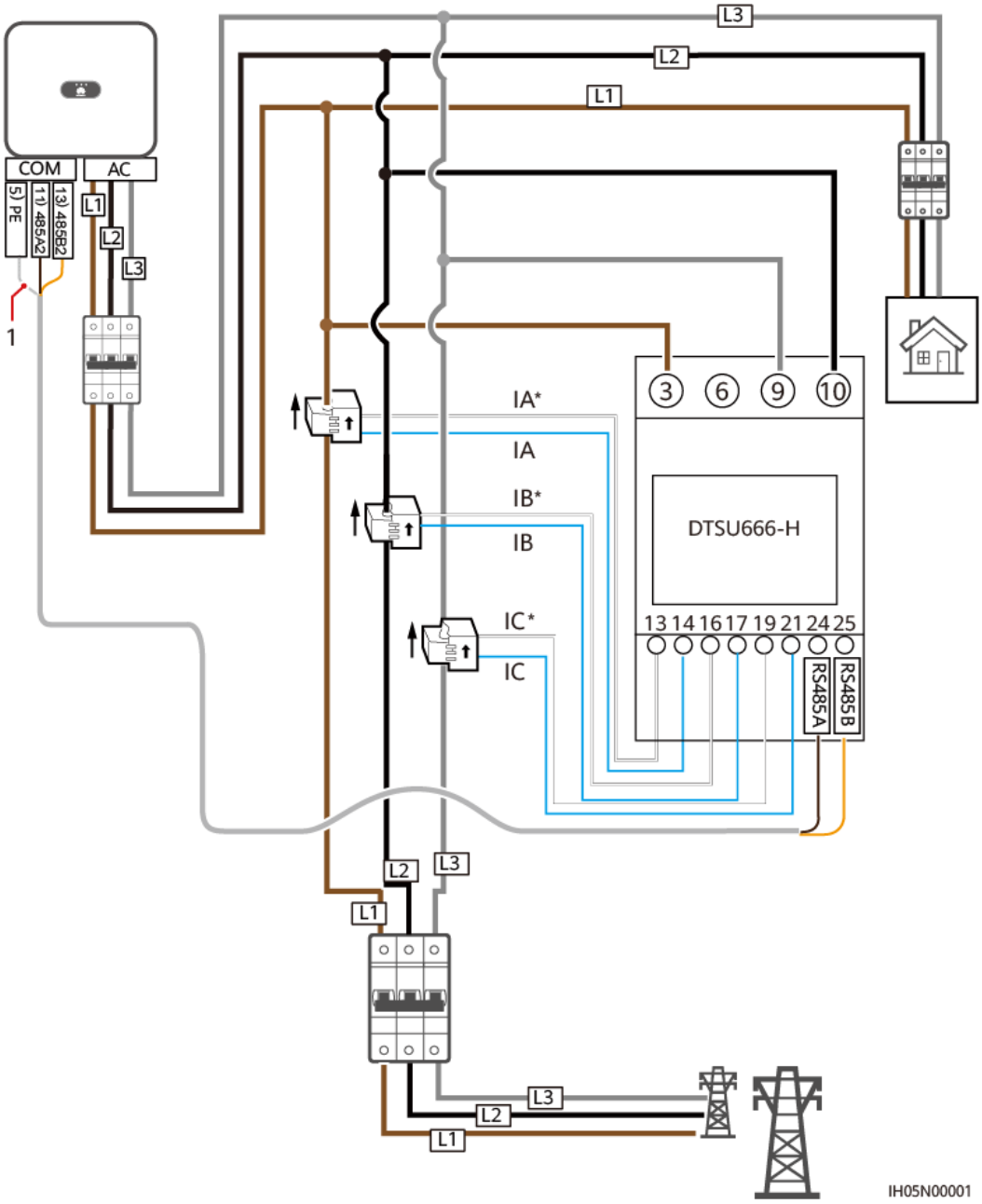

(1) Shield layer of the signal cable

Figure 5-22 YDS60-C24 three-phase, three-wire cable connection (Smart Dongle networking)

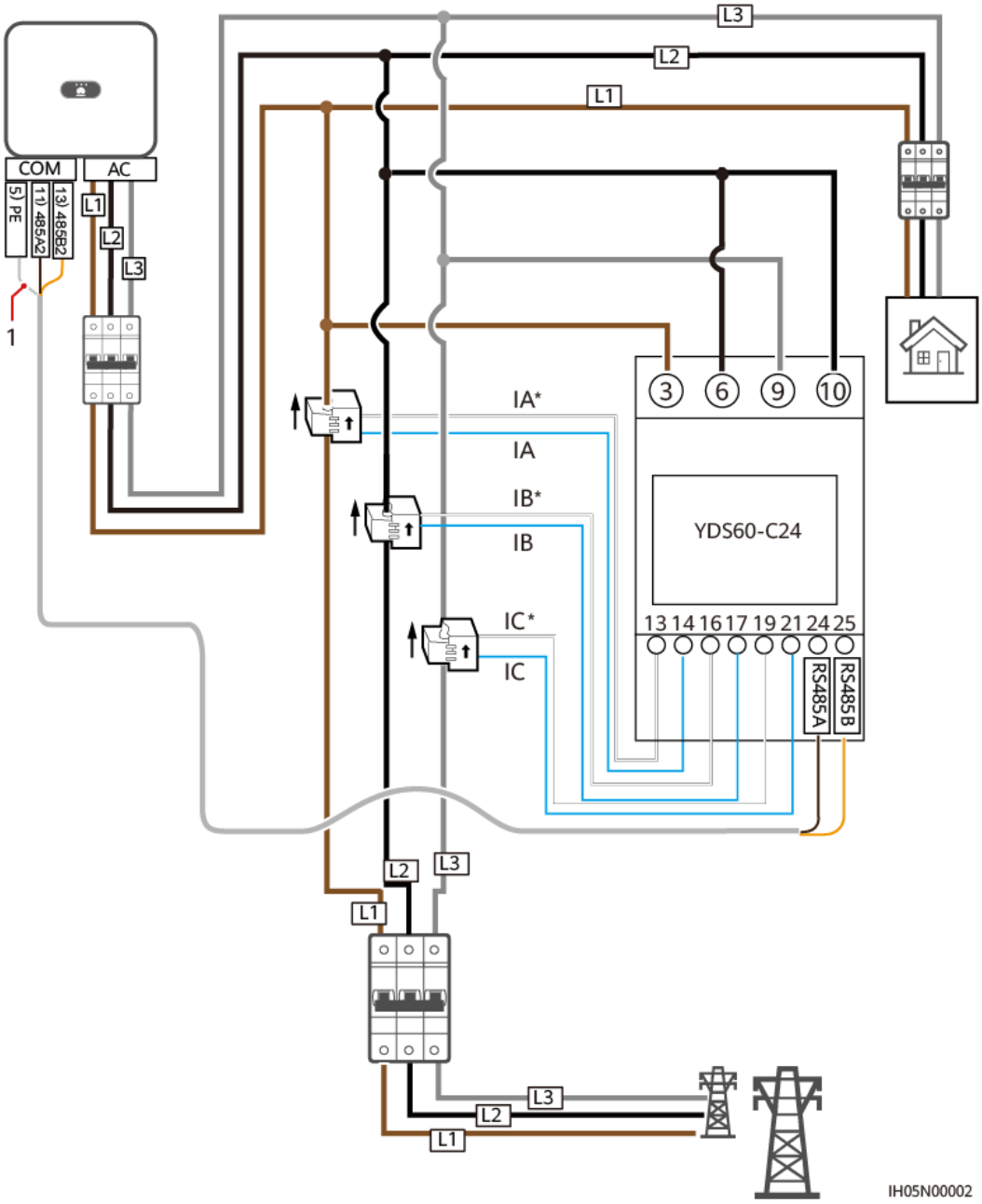

(1) Shield layer of the signal cable

Figure 5-23 Three-phase, four-wire connection (Smart Dongle networking)

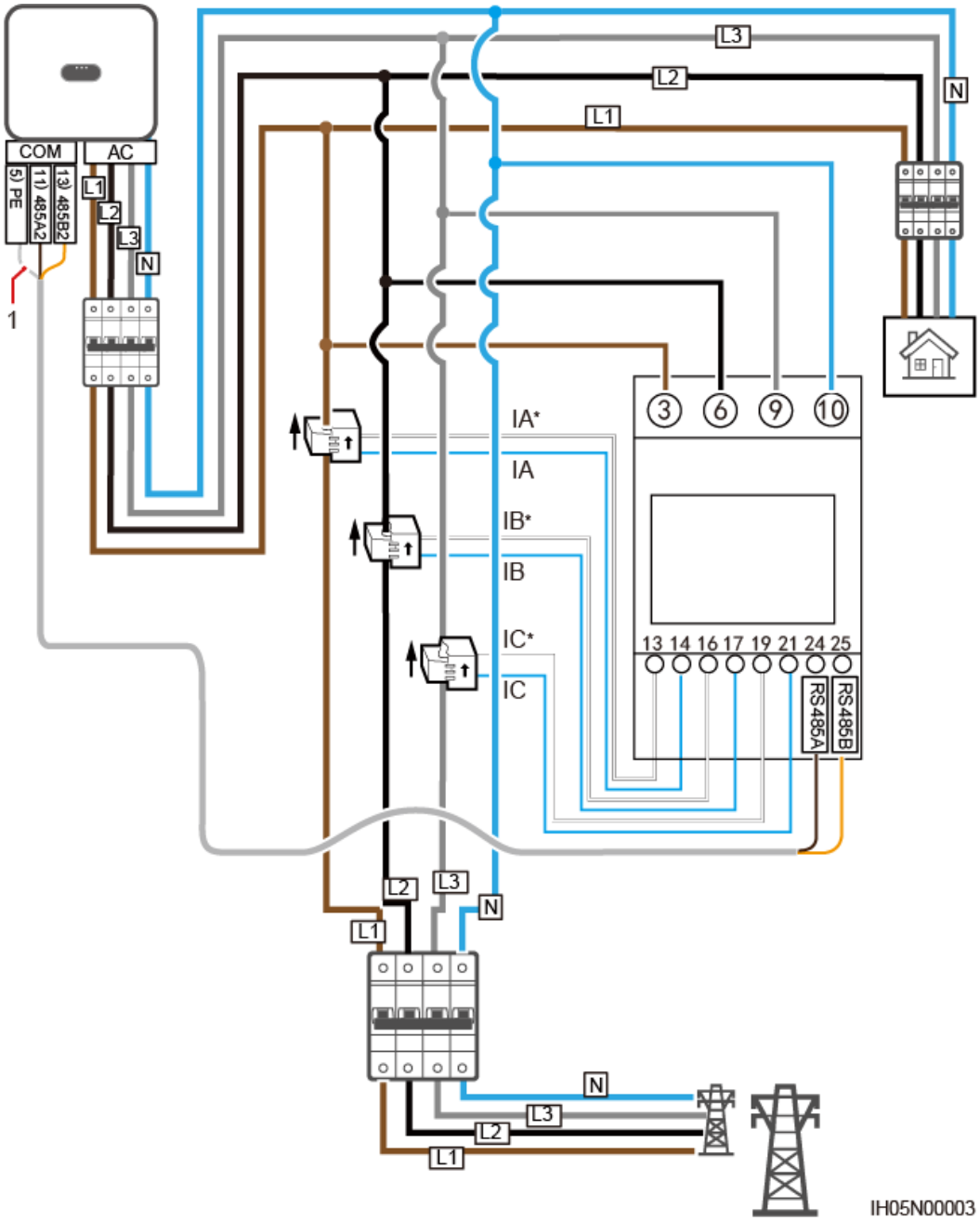

(1) Shield layer of the signal cable

NOTE

For three-phase, three-wire connection, set the cable connection mode. Otherwise, the voltage reading is incorrect.

Table 5-3 Setting the cable connection mode

Parameter	Description
nEt	Set the cable connection mode. **0**: n.34 indicates three-phase, four-wire (factory default). **1**: n.33 indicates three-phase, three-wire.

Procedure

Step 1 Connect the signal cable to the signal cable terminal.

Figure 5-24 Installing the cable

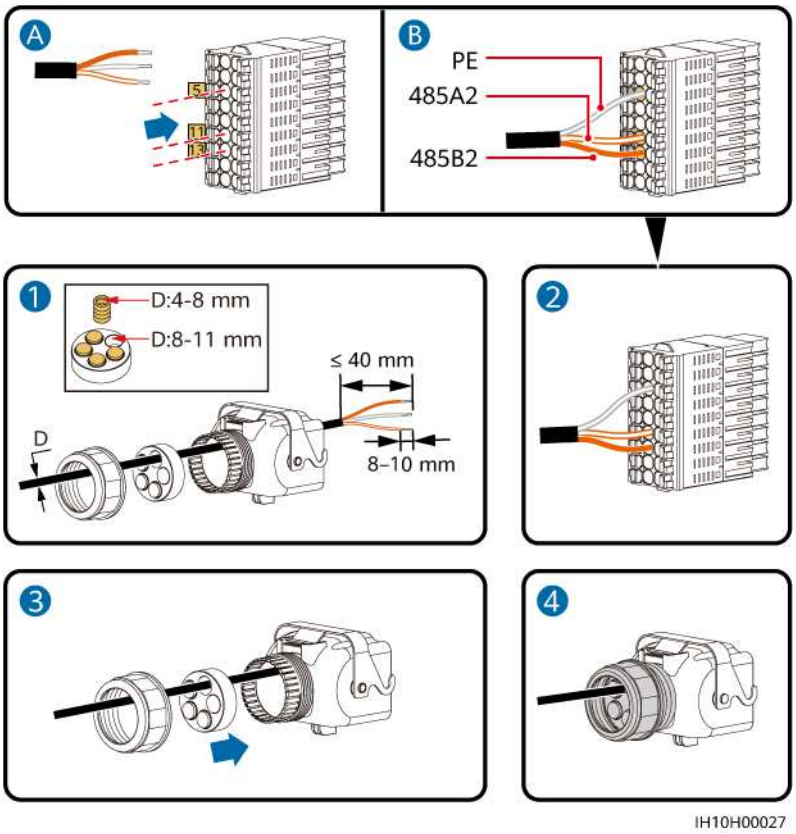

Step 2 Connect the signal cable connector to the COM port.

Figure 5-25 Securing the signal cable connector

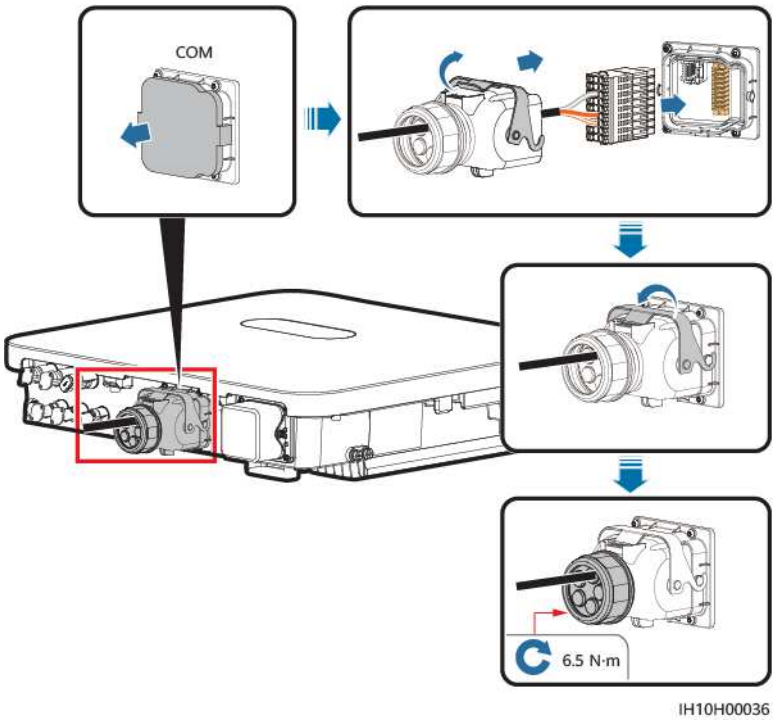

----End

5.7.3 Connecting RS485 Communications Cables (SmartAssistant)

Procedure

Step 1 Connect the signal cable to the signal cable terminal.

Figure 5-26 Installing the cable

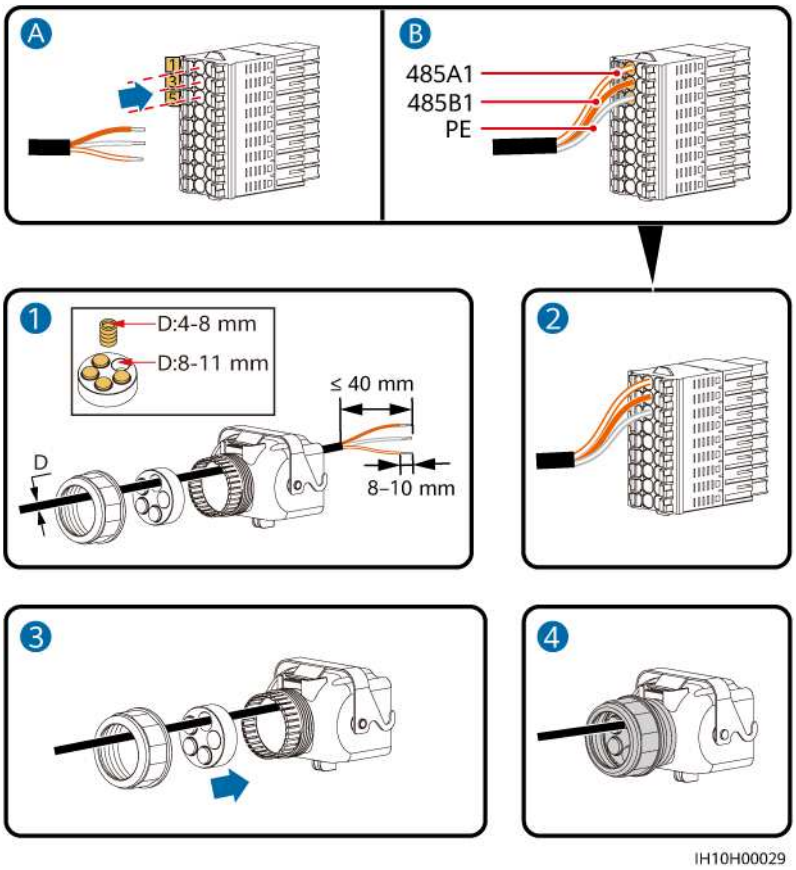

Step 2 Connect the signal cable connector to the COM port.

Figure 5-27 Securing the signal cable connector

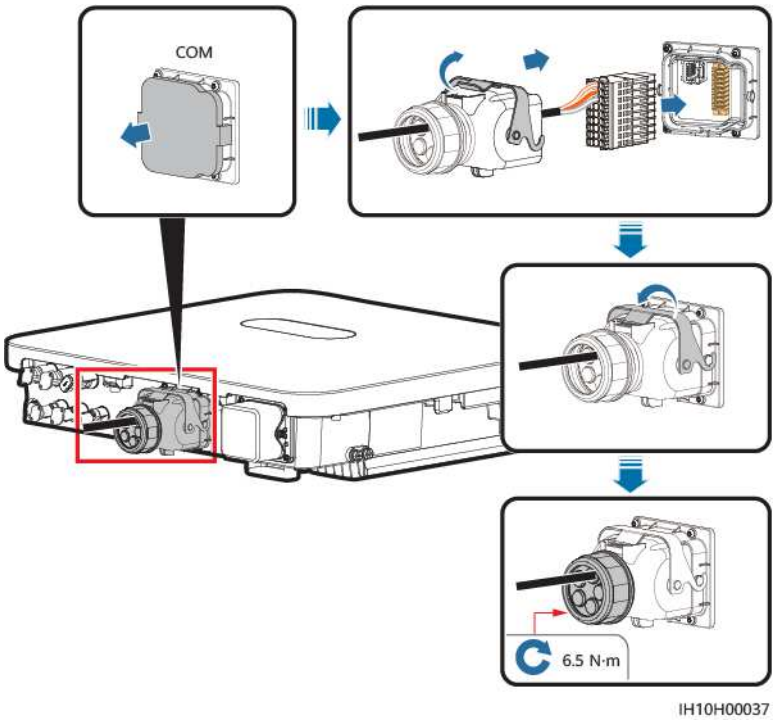

----End

5.7.4 Connecting RS485 Communications Cables (Smart Guard)

Procedure

Step 1 Connect the signal cable to the signal cable terminal.

Figure 5-28 Installing the cable

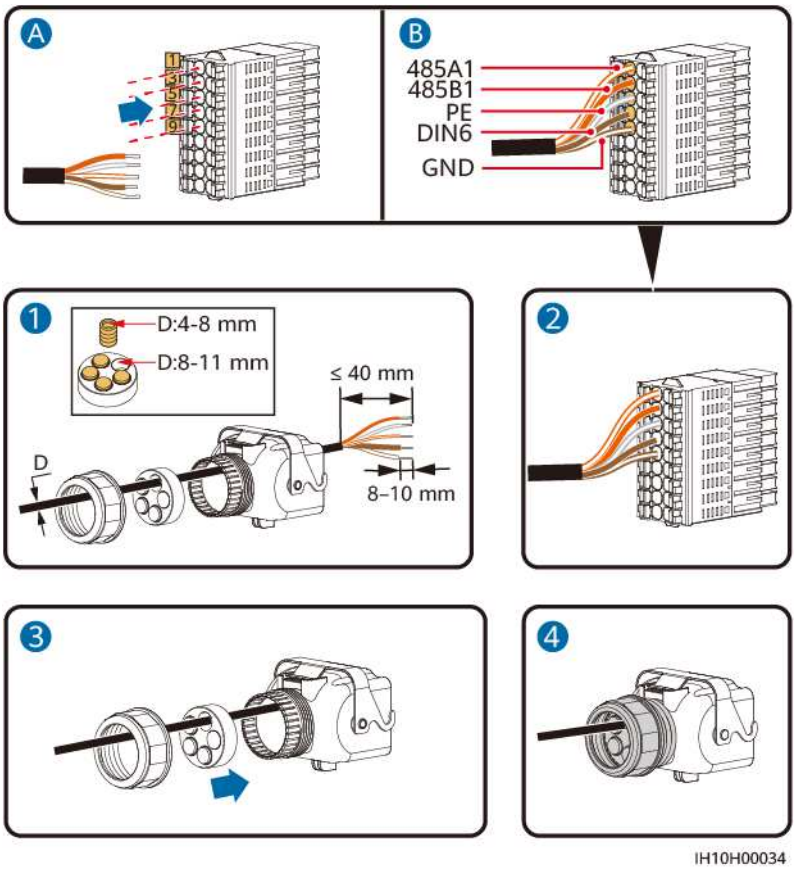

Step 2 Connect the signal cable connector to the COM port.

Figure 5-29 Securing the signal cable connector

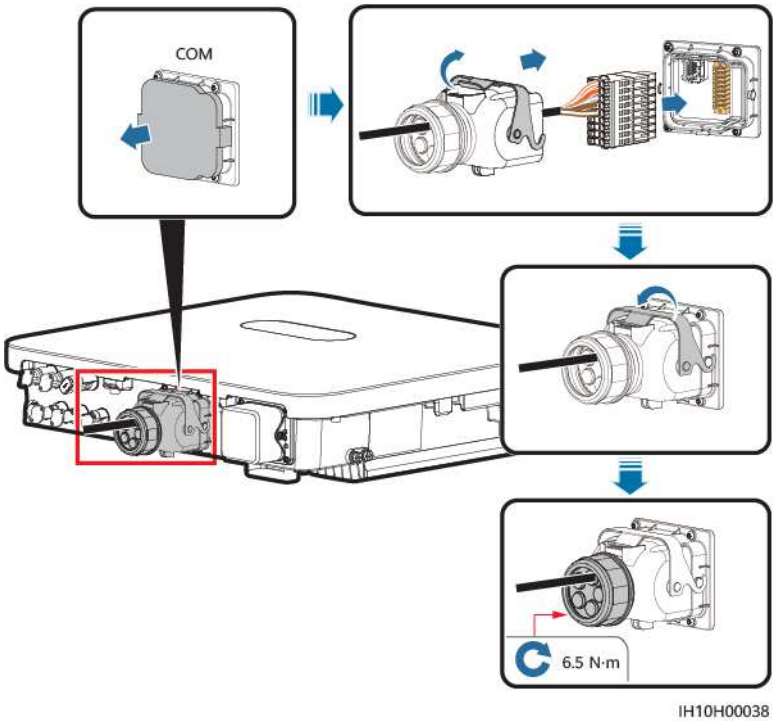

----End

5.7.5 Connecting the Rapid Shutdown Signal Cable

Cable Connection

Figure 5-30 Connecting cascaded inverters to the rapid shutdown switch

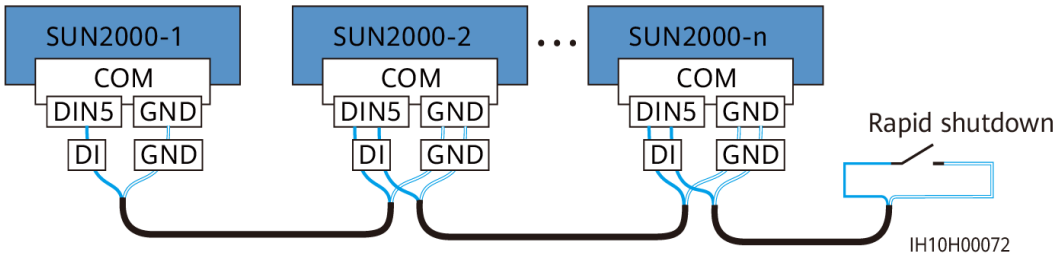

Procedure

Step 1 Connect the signal cable to the signal cable connector.

NOTICE

- The rapid shutdown function is supported only if optimizers are configured for all PV modules.
- To use the rapid shutdown function, connect terminals 16 and 18 to a switch. The switch is turned on by default. When the switch is turned off, a rapid shutdown is triggered.

Figure 5-31 Installing the cable

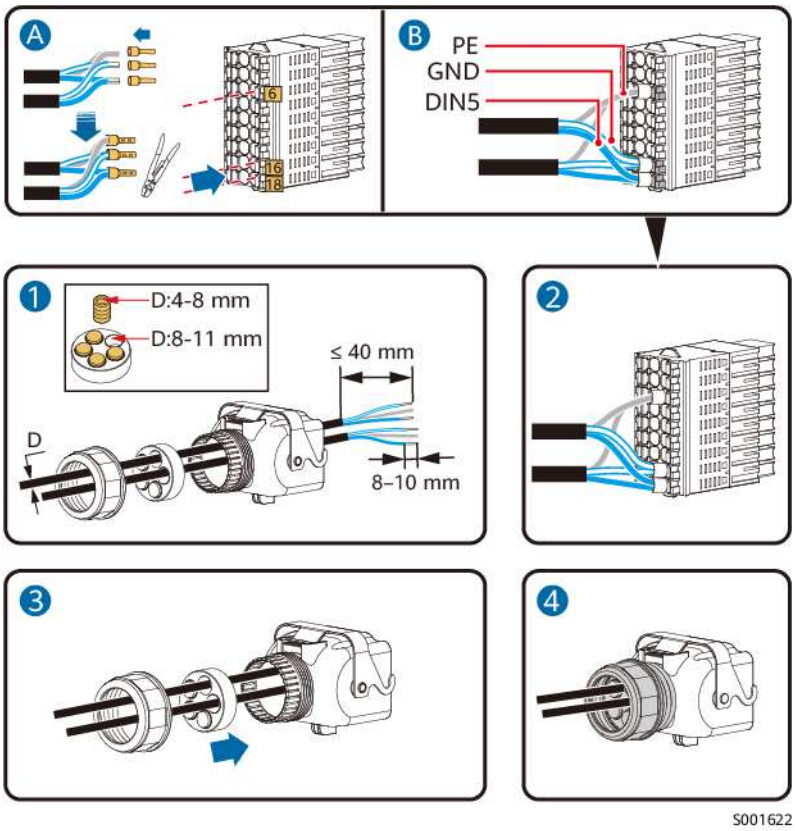

Step 2 Connect the signal cable connector to the COM port.

Figure 5-32 Securing the signal cable connector

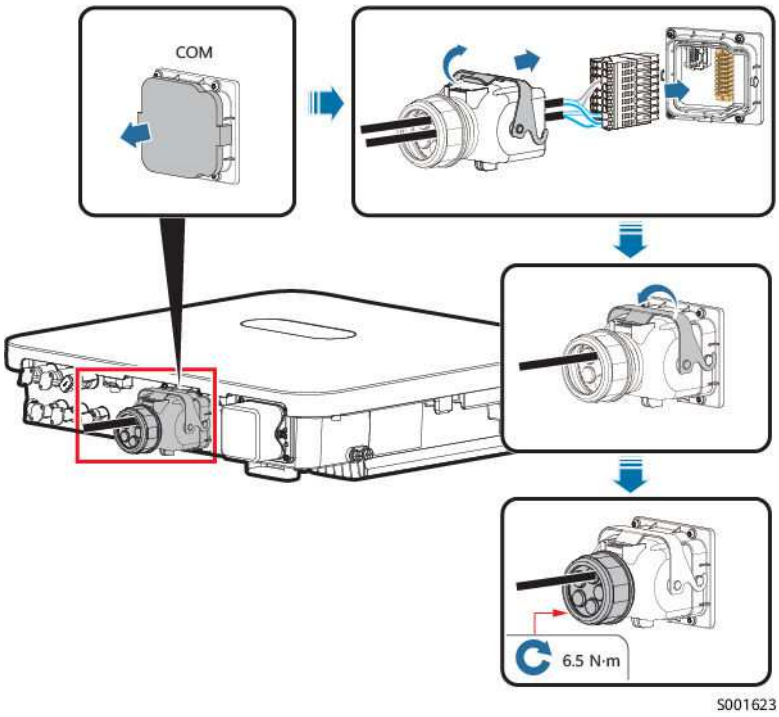

----End

5.7.6 Connecting the Grid Scheduling Signal Cable

Cable Connection

The following figure shows the cable connection between the inverter and the ripple control device.

Figure 5-33 Cable connection

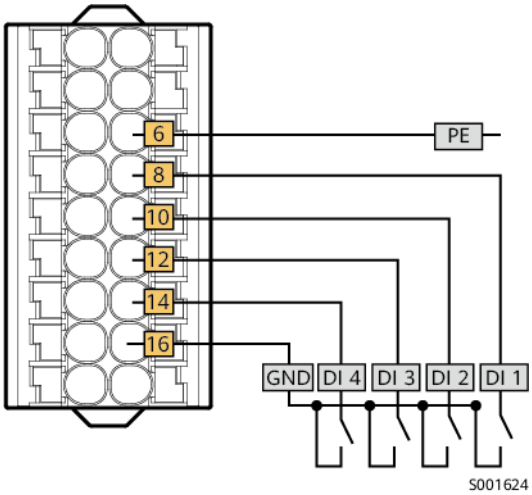

- In Smart Dongle networking, log in to the local commissioning screen as an installer, choose **Power adjustment** > **Dry contact scheduling settings**, and enable **Dry contact scheduling**.
- In SmartAssistant networking, log in to the local commissioning screen as an installer, choose **Power adjustment** > **Scheduling via DI Port**, and enable **Scheduling via DI Port**.

Procedure

Step 1 Connect the signal cable to the signal cable connector.

Figure 5-34 Installing the cable

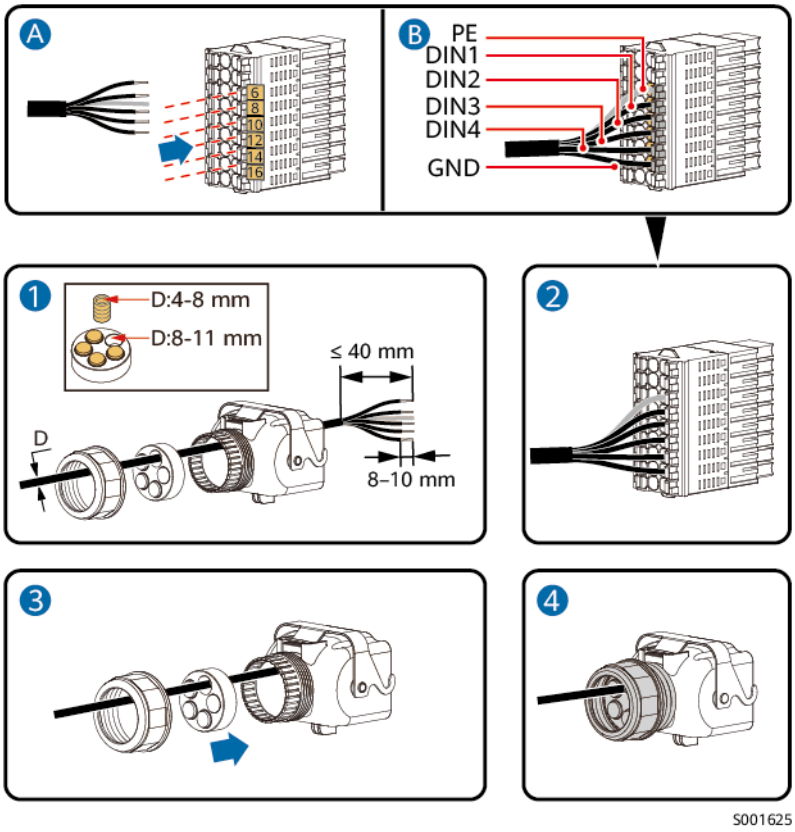

Step 2 Connect the signal cable connector to the COM port.

Figure 5-35 Securing the signal cable connector

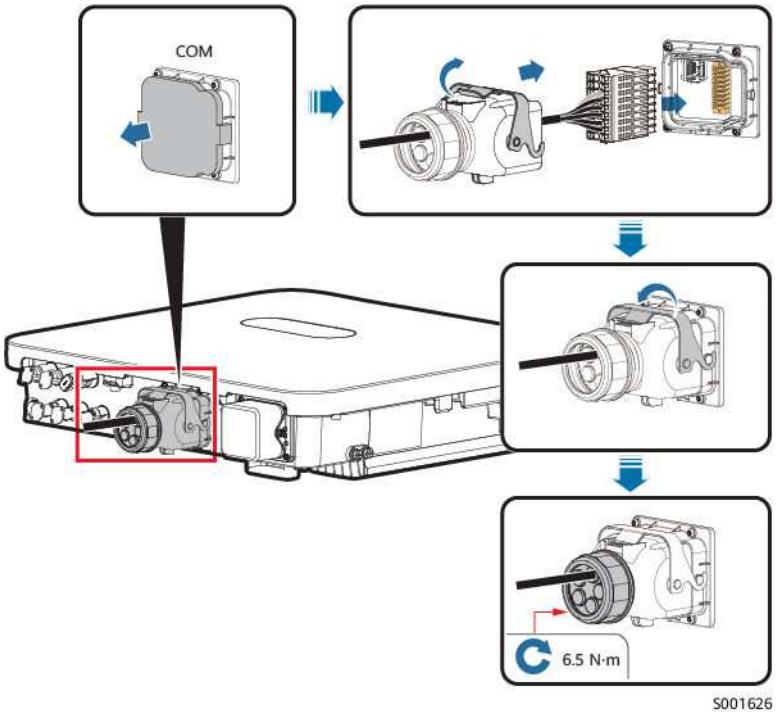

----End

5.7.7 Connecting NS Protection Signal Cables

Cable Connection

NOTE

- The NS protection function is applicable to grid code **VDE-AR-N-4105**, **SWITZERLAND-NA/EEA:2020-LV230**, **EN50549-FI**, or **ANRE**.
- Connect the NS protection switch to GND (pin 16) and DIN5 (pin 18). The switch is turned on by default. When the switch is turned off, NS protection is triggered. Rapid shutdown and NS protection use the same pins, which are GND (pin 16) and DIN5 (pin 18). Therefore, you can use only either of the functions.
- The cable connection method for a single inverter is the same as that for cascaded inverters. For a single inverter, connect GND and DIN5 to the same cable.
- Log in to the app as an installer, choose **Me** > **Device commissioning**, and connect to the WLAN hotspot of the inverter. Log in to the local commissioning system as an installer, choose **Settings** > **Feature parameters** > **Dry contact function**, and set **Dry contact function** to **NS protection**.

Figure 5-36 Connecting cascaded inverters to the NS protection switch

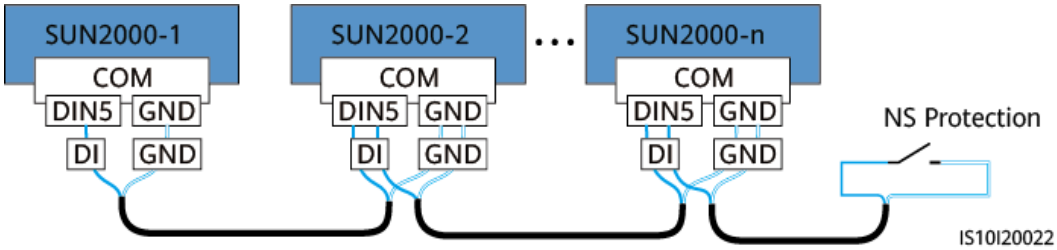

Procedure

Step 1 Connect signal cables to the signal cable connector (for inverter cascading).

Figure 5-37 Installing cables

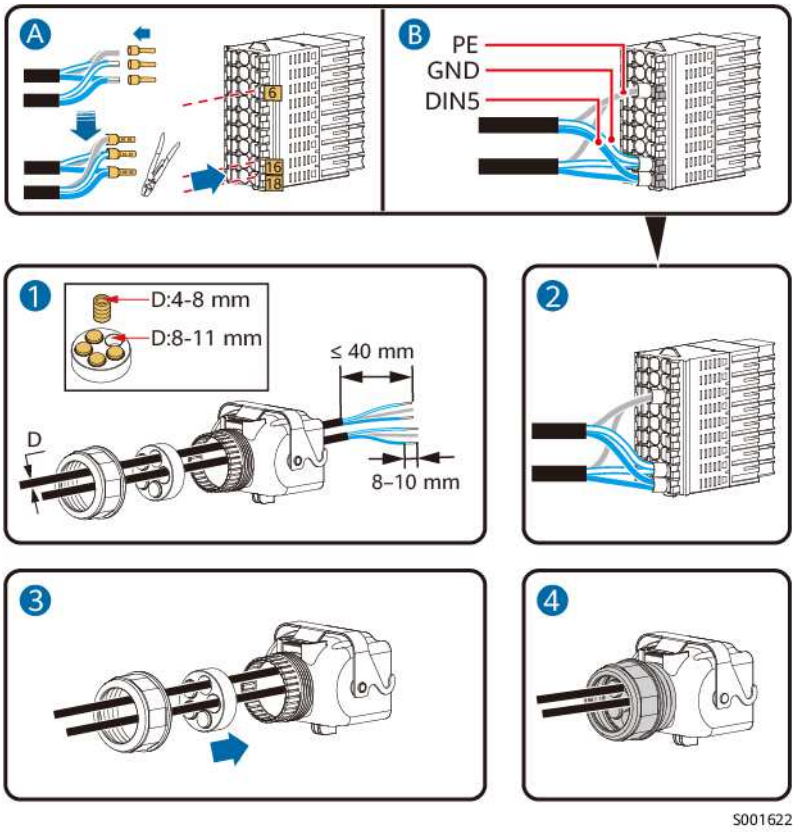

Step 2 Connect the signal cable connector to the COM port.

Figure 5-38 Securing the signal cable connector

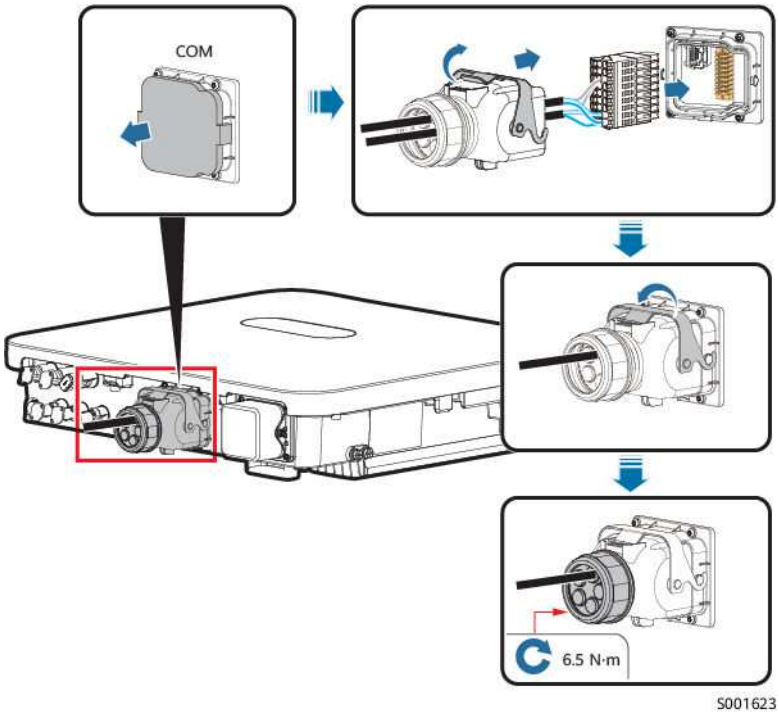

----End

5.7.8 Connecting the Battery Signal Cable

Cable Connection

The following figure shows the cable connection between the inverter and the battery.

Figure 5-39 Cable connection

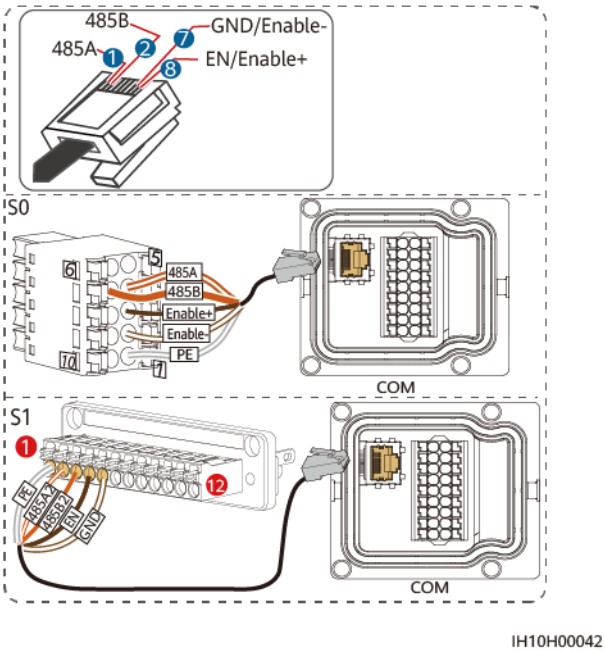

Table 5-4 Cable connection description

RJ45	Cable Color	Definition
1	White-and-orange	485A
2	Orange	485B
3	White-and-green	-
4	Blue	-
5	White-and-blue	-
6	Green	-
7	White-and-brown	GND/Enable-
8	Brown	EN/Enable+

Procedure

Step 1 Connect the RJ45 connector of the battery signal cable to the RJ45 port.

 Copyright © Huawei Digital Power Technologies Co., Ltd.

Figure 5-40 Installing the cable

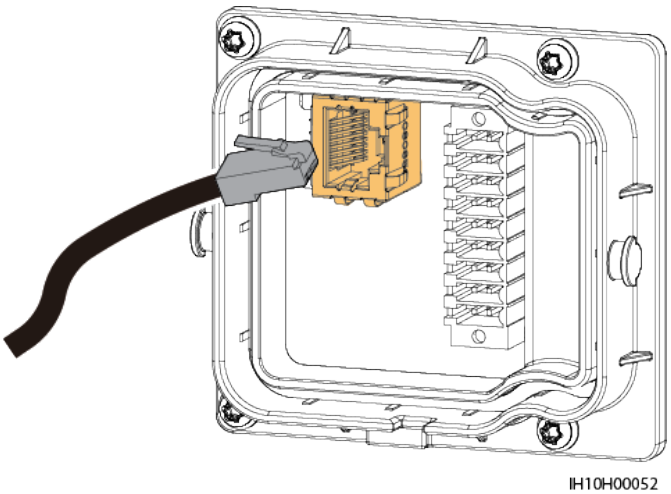

----End

5.8 (Optional) Installing the Smart Dongle and Anti-theft Components

NOTE

- If WLAN-FE communication is used, install the WLAN-FE Smart Dongle (SDongleA-05). For details, see **SDongleA-05 Smart Dongle Quick Guide (WLAN-FE)**.
- If 4G communication is used, install the 4G Smart Dongle (SDongleB-06). For details, see **SDongleB-06 Smart Dongle Quick Guide (4G)**.
- If the Smart Dongle is used, you need to install anti-theft components after installing the Smart Dongle.

WLAN-FE Smart Dongle (FE Communication)

You are advised to use a CAT 5E outdoor shielded network cable (outer diameter < 9 mm; internal resistance ≤ 1.5 ohms/10 m) and shielded RJ45 connectors.

Figure 5-41 Installing the WLAN-FE Smart Dongle (FE communication)

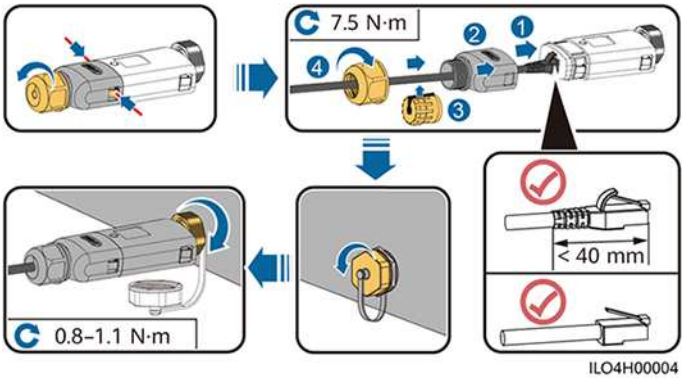

Figure 5-42 Installing anti-theft components for the Smart Dongle

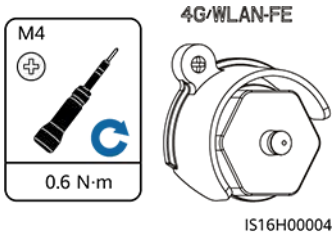

4G Smart Dongle (4G Communication)

NOTE

- If your Smart Dongle is not configured with a SIM card, you need to prepare one (dimensions: 25 mm x 15 mm; capacity: ≥ 64 KB).
- When installing the SIM card, determine its installation direction based on the silk screen and arrow on the card slot.
- Press the SIM card in place to lock it. In this case, the SIM card is correctly installed.
- When removing the SIM card, push it inward to eject it.
- When reinstalling the enclosure of the Smart Dongle, ensure that the snap-fits click into place.

Figure 5-43 Installing the 4G Smart Dongle (SDongleB-06)

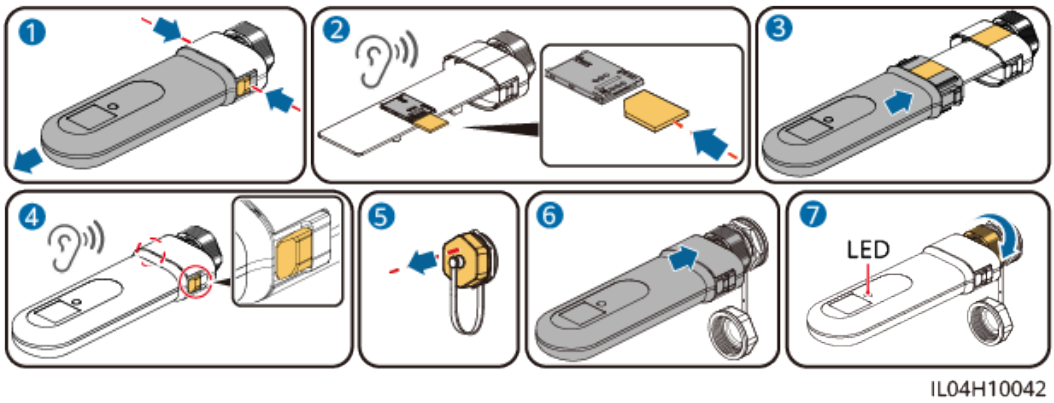

Figure 5-44 Installing anti-theft components for the Smart Dongle

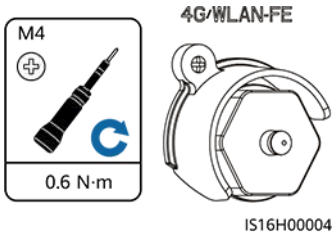

 Copyright © Huawei Digital Power Technologies Co., Ltd.

6 Check Before Power-On

Table 6-1 Checklist

No.	Check Item	Expected Result
1	Inverter	The inverter is installed correctly and securely.
2	Smart Dongle	The Smart Dongle is installed correctly and securely.
3	Cable routing	Cables are routed properly as required by the customer.
4	Cable ties	Cable ties are evenly distributed and no burr exists.
5	Grounding	The PE cable is connected correctly, securely, and reliably.
6	Switches	All **DC SWITCH** and other switches connected to the inverter are turned off.
7	Cable connections	The AC output power cable, DC input power cables, and signal cables are connected correctly and securely.
8	Unused terminals and ports	Unused terminals and ports are locked by waterproof glands.
9	Installation environment	The installation space is proper, and the installation environment is clean and tidy.

 Copyright © Huawei Digital Power Technologies Co., Ltd.

7 Power-On and Commissioning

DANGER

- Wear personal protective equipment and use dedicated insulated tools to avoid electric shocks or short circuits.

7.1 Powering On the Inverter

Precautions

NOTICE

- Before the equipment is put into operation for the first time, ensure that the parameters are set correctly by professional personnel. Incorrect parameter settings may result in noncompliance with local grid connection requirements and affect the normal operations of the equipment.
- If the DC power supply is connected but the AC power supply is disconnected, the inverter will report a **Grid Failure** alarm. The inverter can start properly only after the power grid recovers.

Procedure

Step 1 If a battery is connected, turn on the battery switch first.

Step 2 At the AC switch between the inverter and the power grid, use a multimeter to measure the grid voltage and ensure that the voltage is within the allowed operating voltage range of the inverter. If the voltage is not in the allowed range, check the circuits.

Step 3 Turn on the AC switch between the inverter and the power grid.

Step 4 Turn on the DC switch (if any) between the PV strings and the inverter.

Step 5 (Optional) Remove the DC switch padlock from the inverter.

 Copyright © Huawei Digital Power Technologies Co., Ltd.

Step 6 Set the DC SWITCH on the inverter to ON.

Step 7 Observe the LED indicators to check the status of the inverter.

Table 7-1 LED indicator description

Category	Status		Description
Running indication 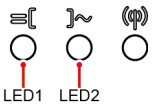	**LED1**	**LED2**	-
	Steady green	Steady green	The inverter is operating in grid-tied mode.
	Blinking green slowly (on for 1s and off for 1s)	Off	The DC is on and the AC is off.
	Blinking green slowly (on for 1s and off for 1s)	Blinking green slowly (on for 1s and off for 1s)	Both the DC and AC are on, and the inverter is off-grid.
	Off	Blinking green slowly (on for 1s and off for 1s)	The DC is off and the AC is on.
	Steady yellow	Steady yellow	The inverter is running in off-grid state.
	Blinking yellow slowly	Off	The DC is on and the inverter has no output in off-grid state.
	Blinking yellow slowly	Blinking yellow slowly	The inverter is overloaded in off-grid state.
	Off	Off	Both the DC and AC are off.
	Blinking red fast (on for 0.2s and off for 0.2s)	-	There is a DC environmental alarm, such as **String Reverse Connection**, or **Low Insulation Resistance**.

 Copyright © Huawei Digital Power Technologies Co., Ltd.

Category	Status			Description
	-	Blinking red fast		There is an AC environmental alarm, such as **Grid Undervoltage**, **Grid Overvoltage**, **Grid Overfrequency**, or **Grid Underfrequency**.
	Steady red	Steady red		A fault exists.
Communication indication 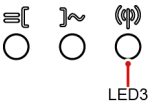	**LED3**			-
	Blinking green fast (on for 0.2s and off for 0.2s)			Communication is in progress. (When a mobile phone is connected to the inverter, the indicator first blinks green slowly, indicating that the phone is connected to the inverter.)
	Blinking green slowly (on for 1s and off for 1s)			The mobile phone is connected to the inverter.
	Off			There is no communication.
Device replacement indication	**LED1**	**LED2**	**LED3**	–
	Steady red	Steady red	Steady red	The inverter hardware is faulty and needs to be replaced.

Step 8 (Optional) Observe the Smart Dongle LED indicator to check the status of the Smart Dongle.

- WLAN-FE Smart Dongle

Figure 7-1 WLAN-FE Smart Dongle

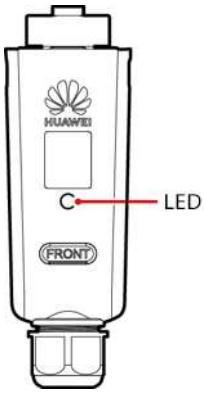

Table 7-2 Indicator description

LED Indicator	Status	Remarks	Description
-	Off	Normal	The Smart Dongle is not secured or not powered on.
Yellow (blinking green and red simultaneously)	Steady on		The Smart Dongle is secured and powered on.
Red	Blinking fast (on for 0.2s and off for 0.2s)		The parameters for connecting to the router are to be set.
Red	Steady on	Abnormal	The Smart Dongle is faulty and needs to be replaced.
Blinking red and green alternately	Blinking slowly (on for 1s and off for 1s)	Abnormal	No communication with the inverter: – Remove and then insert the Smart Dongle. – Check whether the inverter matches the Smart Dongle. – Connect the Smart Dongle to another inverter. Check whether the Smart Dongle is faulty or the USB port of the inverter is faulty.
Green	Blinking slowly (on for 0.5s and off for 0.5s)	Normal	Connecting to the router
Green	Steady on		The management system is successfully connected.
Green	Blinking fast (on for 0.2s and off for 0.2s)		The inverter is communicating with the management system through the Smart Dongle.

- 4G Smart Dongle

Table 7-3 Indicator description

LED Indicator	Status	Remarks	Description
-	Off	Normal	The Smart Dongle is not secured or not powered on.
Yellow (blinking green and red simultaneously)	Steady on	Normal	The Smart Dongle is secured and powered on.
Green	The blinking interval is 2s. The indicator is on for 0.1s and off for 1.9s.	Normal	Dialing (lasts for less than 1 minute)
		Abnormal	If the duration is longer than 1 minute, the 4G parameter settings are incorrect. Re-configure the parameters.
	Blinking slowly (on for 1s and off for 1s)	Normal	The dialup is successful (lasts for less than 30s).
		Abnormal	If the duration is longer than 30s, the management system parameters are incorrectly set. Re-configure the parameters.
	Steady on	Normal	The management system is successfully connected.
	Blinking fast (on for 0.2s and off for 0.2s)		The inverter is communicating with the management system through the Smart Dongle.
Red	Steady on	Abnormal	The Smart Dongle is faulty and needs to be replaced.
	Blinking fast (on for 0.2s and off for 0.2s)		The Smart Dongle has no SIM card or the SIM card is in poor contact. Check whether the SIM card has been installed or is in good contact. If not, install a SIM card or remove and re-insert the SIM card.

 Copyright © Huawei Digital Power Technologies Co., Ltd.

LED Indicator	Status	Remarks	Description
	Blinking slowly (on for 1s and off for 1s)		The Smart Dongle fails to be connected to a management system because the SIM card has poor or no reception, or has run out of mobile data. If the Smart Dongle is reliably connected, check the SIM card connectivity through the app. If you have poor or no reception, contact the carrier. Check whether the tariff and mobile data plan of the SIM card are adequate. If not, ensure sufficient balance in the SIM card or purchase a data package.
Blinking red and green alternately	Blinking slowly (on for 1s and off for 1s)		No communication with the inverter: – Remove and then insert the Smart Dongle. – Check whether the inverter matches the Smart Dongle. – Connect the Smart Dongle to another inverter. Check whether the Smart Dongle is faulty or the USB port of the inverter is faulty.

----End

7.2 Device Commissioning

Smart Guard Networking

No.	Contents
1	Downloading the App and Registering an Installer Account
2	Quick Settings, Running Information Viewing, and Alarm Management

No.	Contents
3	Setting Parameters: Backup Power Parameter Settings, Power Control, and Battery Parameter Settings
4	Connecting to a Plant
5	Registering an Owner Account or Another Installer Account
6	Energy Management: Negative Rate Optimization, Energy Management Assistant, and Intelligent Power Backup

For details about the device commissioning procedure, see the *Smart Guard Networking Commissioning Manual*. The commissioning manual varies depending on the app. Refer to the manual corresponding to the app in use.

SmartAssistant Networking

No.	Contents
1	Downloading the App and Registering an Installer Account
2	Quick Settings
3	Connecting to a Plant, Setting Electricity Prices, and Registering an Account
4	Setting Parameters: Power Control, Battery Parameter Settings, Communication Parameter Settings, and Other Parameter Settings
5	Energy Management: Negative Rate Optimization and Energy Management Assistant
6	Commissioning Smart Appliances and Huawei Chargers

For details about the device commissioning procedure, see the *SmartAssistant Networking Commissioning Manual*. The commissioning manual varies depending on the app. Refer to the manual corresponding to the app in use.

Smart Dongle Networking

No.	Contents
1	Downloading the App and Registering an Installer Account
2	Quick Settings
3	Connecting to a Plant and Registering an Account
4	Setting Parameters: Power Control, Battery Parameter Settings, and Other Parameter Settings

 Copyright © Huawei Digital Power Technologies Co., Ltd.

No.	Contents
5	Energy Management: Negative Rate Optimization and Energy Management Assistant

For details about the device commissioning procedure, see the Smart Dongle Networking and Inverter Direct Connection Commissioning Manual. The commissioning manual varies depending on the app. Refer to the manual corresponding to the app in use.

8 System Maintenance

DANGER

- Wear personal protective equipment and use dedicated insulated tools to avoid electric shocks or short circuits.

WARNING

- Before performing maintenance, power off the equipment, follow the instructions on the delayed discharge label, and wait for a period of time as specified to ensure that the equipment is not energized.

8.1 Routine Maintenance

To ensure that the inverter can operate properly for a long term, you are advised to perform routine maintenance on it as described in this section.

CAUTION

Power off the system before cleaning the system, connecting cables, and checking grounding reliability.

Table 8-1 Maintenance checklist

Check Item	Check Method	Maintenance Interval
System cleanliness	Check periodically whether the heat sinks are blocked or dirty.	Once every 6 to 12 months

 Copyright © Huawei Digital Power Technologies Co., Ltd.

Check Item	Check Method	Maintenance Interval
Cleanness of air intake and exhaust vents	Check periodically whether there is dust or foreign objects at the air intake and exhaust vents.	Power off the inverter and remove dust and foreign objects. If necessary, remove the baffle plates from the air intake and exhaust vents for cleaning. Once every 6 to 12 months (or once every 3 to 6 months based on the actual dust conditions in the environment)
System running status	• Check whether the inverter is damaged or deformed. • Check whether the inverter generates abnormal sound during operation. • Check whether all inverter parameters are correctly set during operation.	Once every 6 months
Electrical connection	• Check whether cables are disconnected or loose. • Check whether cables are damaged, especially whether the cable sheath that contacts a metal surface is damaged.	6 months after the first commissioning and once every 6 to 12 months after that
Grounding reliability	Check whether the PE cable is securely connected.	6 months after the first commissioning and once every 6 to 12 months after that
Sealing	Check whether all terminals and ports are properly sealed.	Once a year

 Copyright © Huawei Digital Power Technologies Co., Ltd.

8.2 System Power-Off

Precautions

WARNING

- After the system is powered off, the inverter is still energized and hot, which may cause electric shocks or burns. Therefore, wait for 5 minutes after power-off and then put on insulated gloves to operate the inverter.
- Power off the system before maintaining optimizers and PV strings. Otherwise, electric shocks may occur when the PV strings are energized.

Procedure

Step 1 Send a shutdown command on the app.

Step 2 Turn off the AC switch between the inverter and the power grid.

Step 3 Set the **DC SWITCH** to **OFF**.

Step 4 (Optional) Install the padlock for the **DC SWITCH**. This step applies only to models used in Australia.

Step 5 Turn off the DC switch between the inverter and PV strings.

Step 6 (Optional) Turn off the battery switch on the battery.

----End

8.3 Troubleshooting

For details about alarms, see the **Inverter Alarm Reference**.

8.4 Replacing an Inverter

Step 1 Remove the inverter.

1. Power off the system. For details, see **8.2 System Power-Off**.
2. Disconnect all cables from the inverter, including signal cables, DC input power cables, battery cables, AC output power cables, and PE cables.
3. Remove the inverter from the mounting bracket.
4. Remove the mounting bracket.

Step 2 Pack the inverter.

- If the original packaging is available, put the inverter inside it and then seal it using adhesive tape.
- If the original packaging is unavailable, put the inverter inside a suitable hard cardboard box and seal it properly.

 Copyright © Huawei Digital Power Technologies Co., Ltd.

Step 3 Dispose of the inverter.

If the inverter reaches the end of its service life, dispose of it according to local regulations for the disposal of electrical equipment.

Step 4 Install a new inverter.

Step 5 Commission the inverter. For details, see **7 Power-On and Commissioning**.

Step 6 Implement device replacement on the app.

1. Log in to the remote app and tap **Devices** on the home screen.
2. On the **Devices** screen, tap the name of the old device.
3. Tap **::** in the upper right corner and tap **Replace device**.
4. On the **Replace device** screen, tap to scan the QR code of the new device or enter its SN.
5. Tap **Replace**.

----End

8.5 Locating Insulation Resistance Faults

If the ground resistance of a PV string connected to the inverter is too low, the inverter generates a **Low insulation resistance** alarm. The alarm ID is 2062.

The possible causes are as follows:

- A short circuit has occurred between the PV array and the ground.
- The ambient air of the PV array is damp and the insulation between the PV array and the ground is poor.

After the **Low insulation resistance** alarm is reported by the inverter, insulation resistance fault location is automatically triggered. If the fault location is successful, the location information is displayed on the **Alarm details** screen of the **Low insulation resistance** alarm on the app.

Log in to the app, choose **Alarm** > **Active alarm**, and choose **Low insulation resistance** to enter the **Alarm details** screen.

 Copyright © Huawei Digital Power Technologies Co., Ltd.

NOTE

- The positive and negative terminals of a PV string are connected to the PV+ and PV– terminals of the inverter, respectively. The 0% position corresponds to the PV– terminal, and the 100% position corresponds to the PV+ terminal. Other percentages indicate that the fault occurs on a PV module or cable in the PV string.
- Possible fault position = Total number of PV modules in a PV string x Percentage of possible short-circuit positions. For example, if a PV string consists of 14 PV modules and the percentage of the possible short-circuit position is 34%, the possible fault position is 4.76 (14 x 34%), indicating that the fault is located near PV module 4, including the adjacent PV modules and their cables. The inverter has a detection precision of ±1 PV module.
- MPPT1 that may be faulty corresponds to PV1 and MPPT2 that may be faulty corresponds to PV2. The fault can be located only to the MPPT level. Perform the following steps to connect the PV strings corresponding to the faulty MPPT to the inverter one by one to further locate and rectify the fault.
- When a non-short-circuit fault occurs, the possible short-circuit percentage is not displayed. If the insulation resistance is greater than 0.001 MΩ, the fault is not related to short circuit. Check all PV modules in the faulty PV string one by one to locate and rectify the fault.

Figure 8-1 Percentage of short-circuit positions

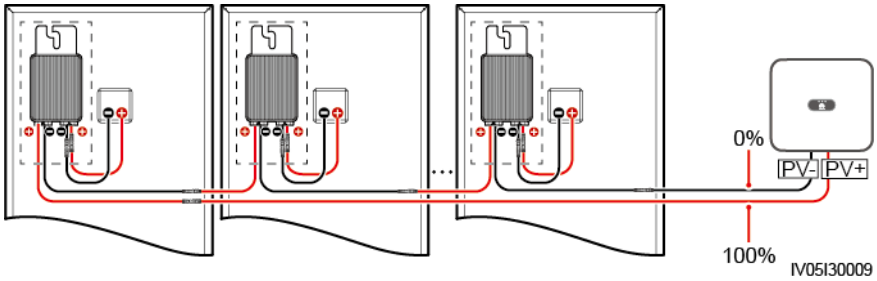

Procedure

NOTICE

If the irradiance or the PV string voltage is too high, the insulation resistance fault location may fail. In this case, the fault location status on the **Alarm details** screen is **Conditions not met**. Perform the following steps to connect PV strings to the inverter one by one to locate the fault. If the system is not configured with any optimizer, skip the corresponding optimizer operations.

Step 1 Ensure that the AC connections are normal. Log in to the app, choose **Maintenance** > **Inverter ON/OFF** on the home screen, and send a shutdown command. Set **DC SWITCH** to **OFF**.

Step 2 Connect one PV string to the inverter, and set **DC SWITCH** to **ON**. If the inverter status is **Shutdown: Command**, log in to the app, choose **Maintenance** > **Inverter ON/OFF** on the home screen, and send a startup command.

Step 3 Choose **Alarm** on the home screen, enter the **Active alarm** screen, and check whether a **Low insulation resistance** alarm is reported.

- If no **Low insulation resistance** alarm is reported 1 minute after the DC side is powered on, choose **Maintenance** > **Inverter ON/OFF** on the home screen,

and send a shutdown command. Set **DC SWITCH** to **OFF**. Go to **Step 2** and check rest of the PV strings one by one.

- If a **Low insulation resistance** alarm is reported 1 minute after the DC side is powered on, check the percentage of possible short-circuit positions on the **Alarm details** screen and calculate the location of the possible faulty PV module based on the percentage. Then go to **Step 4**.

Step 4 Log in to the app, choose **Maintenance** > **Inverter ON/OFF** on the home screen, and send a shutdown command. Set **DC SWITCH** to **OFF**. Check whether the connectors or DC power cables between the optimizer and PV module, between adjacent PV modules, or between adjacent optimizers on the possible fault position are damaged.

- If yes, replace the damaged connectors or DC power cables, and then set **DC SWITCH** to **ON**. If the inverter status is **Shutdown: Command**, choose **Maintenance** > **Inverter ON/OFF**, and send a startup command. View alarm information.
  - If no **Low insulation resistance** alarm is reported 1 minute after the DC side is powered on, troubleshoot the insulation resistance fault of the PV string. Log in to the app, choose **Maintenance** > **Inverter ON/OFF** on the home screen, and send a shutdown command. Set **DC SWITCH** to **OFF**. Go to **Step 2** and check rest of the PV strings one by one. Then, go to **Step 8**.
  - If the DC side is powered on 1 minute later, the **Low insulation resistance** alarm is still reported. Log in to the app, choose **Maintenance** > **Inverter ON/OFF** on the home screen, and send a shutdown command. Set **DC SWITCH** to **OFF** and go to **Step 5**.
- If no, go to **Step 5**.

Step 5 Disconnect the possible faulty PV module and the paired optimizer from the PV string, and use a DC extension cable with an MC4 connector to connect the PV module or optimizer adjacent to the possible faulty PV module. Set **DC SWITCH** to **ON**. If the inverter status is **Shutdown: Command**, choose **Maintenance** > **Inverter ON/OFF** on the home screen, and send a startup command. View alarm information.

- If no **Low insulation resistance** alarm is reported 1 minute after the DC side is powered on, the fault occurred on the disconnected PV module and optimizer. Choose **Maintenance** > **Inverter ON/OFF**, send a shutdown command, and set **DC SWITCH** to **OFF**. Go to **Step 7**.
- If the **Low insulation resistance** alarm is reported 1 minute after the DC side is powered on, the fault did not occur on the disconnected PV module and optimizer. Go to **Step 6**.

Step 6 Log in to the app, choose **Maintenance** > **Inverter ON/OFF** on the home screen, and send a shutdown command. Set **DC SWITCH** to **OFF**, reconnect the disconnected PV module and optimizer, and repeat **Step 5** to check the PV modules and optimizers adjacent to the possible fault location.

Step 7 Determine the position of the ground insulation fault:

- Disconnect the possible faulty PV module from the optimizer.
- Connect the possible faulty optimizer to the PV string.

 Copyright © Huawei Digital Power Technologies Co., Ltd.

- Set **DC SWITCH** to **ON**. If the inverter status is **Shutdown: Command**, choose **Maintenance** > **Inverter ON/OFF**, and send a startup command. View alarm information.
  - If no **Low insulation resistance** alarm is reported 1 minute after the DC side is powered on, the fault is on the possible faulty PV module.
  - If the **Low insulation resistance** alarm is reported 1 minute after the DC side is powered on, the fault is on the possible faulty optimizer.
- Log in to the app, choose **Maintenance** > **Inverter ON/OFF** on the home screen, and send a shutdown command. Set **DC SWITCH** to **OFF**, replace the faulty component, and complete troubleshooting the insulation resistance fault. Go to **Step 2** and check rest of the PV strings one by one. Then, go to **Step 8**.

Step 8 Set **DC SWITCH** to **ON**. If the inverter status is **Shutdown: Command**, choose **Maintenance** > **Inverter ON/OFF**, and send a startup command.

----End

9 Technical Specifications

9.1 SUN2000-(5K-12K)-MAP0-ZH Technical Specifications

Efficiency

Item	SUN2000-5K-MAP0-ZH	SUN2000-6K-MAP0-ZH	SUN2000-8K-MAP0-ZH	SUN2000-10K-MAP0-ZH	SUN2000-12K-MAP0-ZH
Maximum efficiency[a]	98.40%	98.60%	98.60%	98.60%	98.60%
Efficiency in China[a]	96.50%	96.80%	97.30%	97.40%	97.50%
Note a: The efficiency test condition is three-phase imbalance control disabled.					

Input

Item	SUN2000-5K-MAP0-ZH	SUN2000-6K-MAP0-ZH	SUN2000-8K-MAP0-ZH	SUN2000-10K-MAP0-ZH	SUN2000-12K-MAP0-ZH
Recommended maximum input DC power	9000 W	11000 W	14600 W	18000 W	22000 W
Maximum input voltage[b]	1100 V				

 Copyright © Huawei Digital Power Technologies Co., Ltd.

Item	SUN2000-5K-MAP0-ZH	SUN2000-6K-MAP0-ZH	SUN2000-8K-MAP0-ZH	SUN2000-10K-MAP0-ZH	SUN2000-12K-MAP0-ZH
Maximum input current per MPPT	16 A				
Maximum short-circuit current per MPPT	22 A				
Minimum startup voltage	160 V				
MPPT voltage range[c]	160–1000 V				
Rated input voltage	600 V				
Maximum number of inputs	2				
Number of MPPTs	2				
Rated battery voltage	600 V DC				
Battery voltage range	600–980 V DC				
Maximum battery current	20 A				
Battery type	Li-ion				
Note b: The maximum input voltage is the maximum DC input voltage that the inverter can withstand. If the input voltage exceeds this value, the inverter may be damaged. Note c: If the input voltage is beyond the MPPT voltage range, the inverter cannot work properly.					

Output

Item	SUN2000-5K-MAP0-ZH	SUN2000-6K-MAP0-ZH	SUN2000-8K-MAP0-ZH	SUN2000-10K-MAP0-ZH	SUN2000-12K-MAP0-ZH
Rated output power	5000 W	6000 W	8000 W	10000 W	12000 W
Maximum apparent power	5500 VA	6600 VA	8800 VA	11000 VA	13200 VA
Maximum active power (cosϕ = 1)	5500 W	6600 W	8800 W	11000 W	13200 W
Rated output voltage	220 V/380 V, 3W/N+PE 230 V/400 V, 3W/N+PE 240 V/415 V, 3W/N+PE				
Maximum output voltage at long-term operation	Refer to the local power grid standards.				
Rated output current	7.6 A/380 V 7.2 A/400 V 6.9 A/415 V	9.1 A/380 V 8.7 A/400 V 8.3 A/415 V	12.1 A/380 V 11.6 A/400 V 11.1 A/415 V	15.2 A/380 V 14.5 A/400 V 13.9 A/415 V	18.2 A/380 V 17.3 A/400 V 16.7 A/415 V
Maximum output current	8.3 A/380 V 8 A/400 V 7.7 A/415 V	10 A/380 V 9.6 A/400 V 9.2 A/415 V	13.3 A/380 V 12.8 A/400 V 12.2 A/415 V	16.7 A/380 V 15.9 A/400 V 15.3 A/415 V	20.2 A/380 V 19.1 A/400 V 18.5 A/415 V
Overload output power	150% load (single-phase): 5 minutes 200% load (single-phase): 10 seconds				
Maximum input current	7.6 A	9.1 A	12.1 A	15.2 A	18.2 A
Output voltage frequency	50 Hz/60 Hz				

 Copyright © Huawei Digital Power Technologies Co., Ltd.

Item	SUN2000-5K-MAP0-ZH	SUN2000-6K-MAP0-ZH	SUN2000-8K-MAP0-ZH	SUN2000-10K-MAP0-ZH	SUN2000-12K-MAP0-ZH
Power factor	0.8 leading ... 0.8 lagging				
Output DC component (DCI)	< 0.5% of the rated output				
Maximum total harmonic distortion (AC THDi)	< 3% (rated conditions)				

Off-grid Output

Item	SUN2000-5K-MAP0-ZH	SUN2000-6K-MAP0-ZH	SUN2000-8K-MAP0-ZH	SUN2000-10K-MAP0-ZH	SUN2000-12K-MAP0-ZH
Rated output voltage	220 V/380 V, 3W/N+PE 230 V/400 V, 3W/N+PE 240 V/415 V, 3W/N+PE				
Rated output frequency	50 Hz/60 Hz				
Rated output power	5000 W	6000 W	8000 W	10000 W	12000 W
Long-term load power	5500 W	6600 W	8800 W	11000 W	13200 W
Overload output power	110% load (three-phase): long-term operation 150% load (three-phase): 5 minutes 150% load (single-phase): 5 minutes 200% load (three-phase): 10 seconds			110% load (three-phase): long-term operation 150% load (three-phase): 1 minute 150% load (single-phase): 5 minutes 200% load (three-phase): 10 seconds	

 Copyright © Huawei Digital Power Technologies Co., Ltd.

Protection

Item	SUN2000-5K-MAP0-ZH	SUN2000-6K-MAP0-ZH	SUN2000-8K-MAP0-ZH	SUN2000-10K-MAP0-ZH	SUN2000-12K-MAP0-ZH
Overvoltage category	PV II/AC III				
Input DC switch	Supported				
Anti-islanding protection	Supported				
Output overcurrent protection	Supported				
Input reverse connection protection	Supported				
DC surge protection	Yes, compatible with TYPE II protection class according to EN/IEC 61643-11				
AC surge protection	Yes, compatible with TYPE II protection class according to EN/IEC 61643-11				
Insulation resistance detection	Supported				
Residual current monitoring unit (RCMU)	Supported				

Display and Communication

Item	SUN2000-5K-MAP0-ZH	SUN2000-6K-MAP0-ZH	SUN2000-8K-MAP0-ZH	SUN2000-10K-MAP0-ZH	SUN2000-12K-MAP0-ZH
Display	LED indicators; WLAN+app				
WLAN-FE Dongle	Supported				
4G Smart Dongle	Supported				

 Copyright © Huawei Digital Power Technologies Co., Ltd.

Item	SUN2000-5K-MAP0-ZH	SUN2000-6K-MAP0-ZH	SUN2000-8K-MAP0-ZH	SUN2000-10K-MAP0-ZH	SUN2000-12K-MAP0-ZH
SmartAssistant	Supported				
Smart Guard	Supported				
RS485 communication	Supported				
Built-in WLAN	Supported				
DC MBUS	Supported				
AFCI	Supported				
PID recovery	Supported				

General Specifications

Item	SUN2000-5K-MAP0-ZH	SUN2000-6K-MAP0-ZH	SUN2000-8K-MAP0-ZH	SUN2000-10K-MAP0-ZH	SUN2000-12K-MAP0-ZH
Dimensions (W x H x D)	490 mm x 460 mm x 130 mm				
Net weight	≤ 21 kg				
Noise	≤ 29 dB (typical working condition)				
Operating temperature	–25°C to +60°C				
Relative humidity	0–100% RH				
Cooling mode	Natural cooling				
Maximum operating altitude	4000 m (derated when the altitude is greater than 2000 m)				
Storage temperature	–40°C to +70°C				

 Copyright © Huawei Digital Power Technologies Co., Ltd.

Item	SUN2000-5K-MAP0-ZH	SUN2000-6K-MAP0-ZH	SUN2000-8K-MAP0-ZH	SUN2000-10K-MAP0-ZH	SUN2000-12K-MAP0-ZH
IP rating	IP66				
Topology	Transformerless				

Wireless Communication Parameters

Item	Inverter Built-in WiFi
Frequency	2400–2483.5 MHz
Protocols and standards	WLAN 802.11b/g/n
Bandwidth	≤ 20 MHz
Maximum transmit power	≤ 20 dBm EIRP

9.2 SUN2000-(5K-12K)-MAP0 Technical Specifications

Efficiency

Item	SUN2000-5K-MAP0	SUN2000-6K-MAP0	SUN2000-8K-MAP0	SUN2000-10K-MAP0	SUN2000-10K-MAP0-BE	SUN2000-12K-MAP0
Maximum efficiency[a]	98.40%	98.60%	98.60%	98.60%	98.60%	98.60%
European efficiency[a]	97.50%	97.70%	98.00%	98.10%	98.10%	98.20%
Note a: The efficiency test condition is three-phase imbalance control disabled.						

Input

Item	SUN2000-5K-MAP0	SUN2000-6K-MAP0	SUN2000-8K-MAP0	SUN2000-10K-MAP0	SUN2000-10K-MAP0-BE	SUN2000-12K-MAP0
Recommended maximum input DC power	9000 W	11000 W	14600 W	18000 W	18000 W	22000 W
Maximum input voltage[b]	1100 V					
Maximum input current per MPPT	16 A					
Maximum short-circuit current per MPPT	22 A					
Minimum startup voltage	160 V					
MPPT voltage range[c]	160–1000 V					
Rated input voltage	600 V					
Maximum number of inputs	2					
Number of MPPTs	2					
Rated battery voltage	600 V DC					

Item	SUN2000-5K-MAP0	SUN2000-6K-MAP0	SUN2000-8K-MAP0	SUN2000-10K-MAP0	SUN2000-10K-MAP0-BE	SUN2000-12K-MAP0
Battery voltage range	600–980 V DC					
Maximum battery current	20 A					
Battery type	Li-ion					
Note b: The maximum input voltage is the maximum DC input voltage that the inverter can withstand. If the input voltage exceeds this value, the inverter may be damaged. Note c: If the input voltage is beyond the MPPT voltage range, the inverter cannot work properly.						

Output

Item	SUN2000-5K-MAP0	SUN2000-6K-MAP0	SUN2000-8K-MAP0	SUN2000-10K-MAP0	SUN2000-10K-MAP0-BE	SUN2000-12K-MAP0
Rated output power	5000 W	6000 W	8000 W	10000 W	10000 W	12000 W
Maximum apparent power	5500 VA	6600 VA	8800 VA	11000 VA	10000 VA	13200 VA
Maximum active power (cosϕ = 1)	5500 W	6600 W	8800 W	11000 W	10000 W	13200 W
Rated output voltage	220 V/380 V, 3W/N+PE 230 V/400 V, 3W/N+PE 240 V/415 V, 3W/N+PE					

Item	SUN2000-5K-MAP0	SUN2000-6K-MAP0	SUN2000-8K-MAP0	SUN2000-10K-MAP0	SUN2000-10K-MAP0-BE	SUN2000-12K-MAP0
Maximum output voltage at long-term operation	Refer to the local power grid standards.					
Rated output current	7.6 A/380 V 7.2 A/400 V 6.9 A/415 V	9.1 A/380 V 8.7 A/400 V 8.3 A/415 V	12.1 A/380 V 11.6 A/400 V 11.1 A/415 V	15.2 A/380 V 14.5 A/400 V 13.9 A/415 V	15.2 A/380 V 14.5 A/400 V 13.9 A/415 V	18.2 A/380 V 17.3 A/400 V 16.7 A/415 V
Maximum output current	8.3 A/380 V 8 A/400 V 7.7 A/415 V	10 A/380 V 9.6 A/400 V 9.2 A/415 V	13.3 A/380 V 12.8 A/400 V 12.2 A/415 V	16.7 A/380 V 15.9 A/400 V 15.3 A/415 V	15.2 A/380 V 14.5 A/400 V 13.9 A/415 V	20.2 A/380 V 19.1 A/400 V 18.5 A/415 V
Overload output power	150% load (single-phase): 5 minutes 200% load (single-phase): 10 seconds					
Maximum input current	7.6 A	9.1 A	12.1 A	15.2 A	15.2 A	18.2 A
Output voltage frequency	50 Hz/60 Hz					
Power factor	0.8 leading ... 0.8 lagging					
Output DC component (DCI)[d]	< 0.5% of the rated output					
Maximum total harmonic distortion (AC THDi)	< 3% (rated conditions)					

Item	SUN2000-5K-MAP0	SUN2000-6K-MAP0	SUN2000-8K-MAP0	SUN2000-10K-MAP0	SUN2000-10K-MAP0-BE	SUN2000-12K-MAP0
Note d: The output DC component (DCI) is less than 0.25% of the rated output under the G99-TYPEA-LV and G98 grid codes.						

Off-grid Output

Item	SUN2000-5K-MAP0	SUN2000-6K-MAP0	SUN2000-8K-MAP0	SUN2000-10K-MAP0	SUN2000-10K-MAP0-BE	SUN2000-12K-MAP0
Rated output voltage	220 V/380 V, 3W/N+PE 230 V/400 V, 3W/N+PE 240 V/415 V, 3W/N+PE					
Rated output frequency	50 Hz/60 Hz					
Rated output power	5000 W	6000 W	8000 W	10000 W	10000 W	12000 W
Long-term load power	5500 W	6600 W	8800 W	11000 W	11000 W	13200 W
Overload output power	110% load (three-phase): long-term operation 150% load (three-phase): 5 minutes 150% load (single-phase): 5 minutes 200% load (three-phase): 10 seconds			110% load (three-phase): long-term operation 150% load (three-phase): 1 minute 150% load (single-phase): 5 minutes 200% load (three-phase): 10 seconds		

Protection

Item	SUN2000-5K-MAP0	SUN2000-6K-MAP0	SUN2000-8K-MAP0	SUN2000-10K-MAP0	SUN2000-10K-MAP0-BE	SUN2000-12K-MAP0-
Overvoltage category	PV II/AC III					
Input DC switch	Supported					
Anti-islanding protection	Supported					
Output overcurrent protection	Supported					
Input reverse connection protection	Supported					
DC surge protection	Yes, compatible with TYPE II protection class according to EN/IEC 61643-11					
AC surge protection	Yes, compatible with TYPE II protection class according to EN/IEC 61643-11					
Insulation resistance detection	Supported					
Residual current monitoring unit (RCMU)	Supported					

Display and Communication

Item	SUN2000-5K-MAP0	SUN2000-6K-MAP0	SUN2000-8K-MAP0	SUN2000-10K-MAP0	SUN2000-10K-MAP0-BE	SUN2000-12K-MAP0
Display	LED indicators; WLAN+app					
WLAN-FE Dongle	Supported					
4G Smart Dongle	Supported					
SmartAssistant	Supported					
Smart Guard	Supported					
RS485 communication	Supported					
Built-in WLAN	Supported					
DC MBUS	Supported					
AFCI	Supported					
PID recovery	Supported					

General Specifications

Item	SUN2000-5K-MAP0	SUN2000-6K-MAP0	SUN2000-8K-MAP0	SUN2000-10K-MAP0	SUN2000-10K-MAP0-BE	SUN2000-12K-MAP0
Dimensions (W x H x D)	490 mm x 460 mm x 130 mm					
Net weight	≤ 21 kg					
Noise	≤ 29 dB (typical working condition)					

 Copyright © Huawei Digital Power Technologies Co., Ltd.

Item	SUN2000-5K-MAP0	SUN2000-6K-MAP0	SUN2000-8K-MAP0	SUN2000-10K-MAP0	SUN2000-10K-MAP0-BE	SUN2000-12K-MAP0
Operating temperature	–25°C to +60°C					
Relative humidity	0–100% RH					
Cooling mode	Natural cooling					
Maximum operating altitude	4000 m (derated when the altitude is greater than 2000 m)					
Storage temperature	–40°C to +70°C					
IP rating	IP66					
Topology	Transformerless					

Wireless Communication Parameters

Item	Inverter Built-in WiFi
Frequency	2400–2483.5 MHz
Protocols and standards	WLAN 802.11b/g/n
Bandwidth	≤ 20 MHz
Maximum transmit power	≤ 20 dBm EIRP

A Grid Codes

NOTE

The grid codes are subject to change. The listed codes are for reference only.

Table A-1 SUN2000-(5K-12K)-MAP0-ZH grid codes

No.	Grid Code	Description	SUN2000-5K-MAP0-ZH	SUN2000-6K-MAP0-ZH	SUN2000-8K-MAP0-ZH	SUN2000-10K-MAP0-ZH	SUN2000-12K-MAP0-ZH
1	NB/T 32004	China Golden Sun low-voltage power grid	Supported	Supported	Supported	Supported	Supported
2	CHINA-LV220/380	China low-voltage power grid	Supported	Supported	Supported	Supported	Supported
3	Custom (50 Hz)	Reserved	Supported	Supported	Supported	Supported	Supported
4	Island-Grid	Grid code for off-grid operation	Supported	Supported	Supported	Supported	Supported

Table A-2 SUN2000-10K-MAP0-BE grid code

No.	Grid Code	Description	SUN2000-10K-MAP0-BE
1	C10/11	Belgium power grid	Supported
2	SWITZERLAND-LV230	Switzerland power grid	Supported

 Copyright © Huawei Digital Power Technologies Co., Ltd.

No.	Grid Code	Description	SUN2000-10K-MAP0-BE
3	SAUDI	Saudi Arabia power grid	Supported

Table A-3 SUN2000-(5K-12K)-MAP0 grid codes

No.	Grid Code	Description	SUN2000-5K-MAP0	SUN2000-6K-MAP0	SUN2000-8K-MAP0	SUN2000-10K-MAP0	SUN2000-12K-MAP0
1	VDE-AR-N-4105	Germany/Hungary power grid	Supported	Supported	Supported	Supported	Supported
2	UTE C 15-712-1(A)	France mainland power grid	Supported	Supported	Supported	Supported	Supported
3	UTE C 15-712-1(B)	France island power grid	Supported	Supported	Supported	Supported	Supported
4	UTE C 15-712-1(C)	France island power grid	Supported	Supported	Supported	Supported	Supported
5	CEI0-21	Italy power grid	Supported	Supported	Supported	Supported	Supported
6	IEC61727	IEC 61727 low-voltage grid-connection (50 Hz)	Supported	Supported	Supported	Supported	Supported
7	TAI-PEA	Thailand grid-connection standard	Supported	-	-	Supported	-
8	TAI-MEA	Thailand grid-connection standard	Supported	-	-	Supported	-
9	Philippines	Philippines low-voltage power grid	Supported	Supported	Supported	Supported	Supported
10	NRS-097-2-1	South Africa power grid standard	Supported	Supported	Supported	Supported	Supported

No.	Grid Code	Description	SUN2000-5K-MAP0	SUN2000-6K-MAP0	SUN2000-8K-MAP0	SUN2000-10K-MAP0	SUN2000-12K-MAP0
11	IEC61727-60Hz	IEC 61727 low-voltage grid-connection (60 Hz)	Supported	Supported	Supported	Supported	Supported
12	DUBAI	Dubai low-voltage power grid	Supported	Supported	Supported	Supported	Supported
13	Jordan-Distribution	Jordan power distribution network low-voltage power grid	Supported	Supported	Supported	Supported	Supported
14	TAIPOWER	Taiwan Power low-voltage power grid	Supported	Supported	Supported	Supported	Supported
15	Oman	Oman low-voltage power grid	Supported	Supported	Supported	Supported	Supported
16	Pakistan	Pakistan power grid	Supported	Supported	Supported	Supported	Supported
17	G99-TYPEA-LV	United Kingdom power grid	Supported	Supported	Supported	Supported	Supported
18	G98	United Kingdom power grid	Supported	Supported	Supported	Supported	-
19	RD1699/661	Spain power grid	Supported	Supported	Supported	Supported	Supported
20	NTS	Spain power grid	Supported	Supported	Supported	Supported	Supported
21	PO12.3	Spain power grid	Supported	Supported	Supported	Supported	Supported
22	SINGAPORE	Singapore low-voltage power grid	Supported	Supported	Supported	Supported	Supported

 Copyright © Huawei Digital Power Technologies Co., Ltd.

No.	Grid Code	Description	SUN2000-5K-MAP0	SUN2000-6K-MAP0	SUN2000-8K-MAP0	SUN2000-10K-MAP0	SUN2000-12K-MAP0
23	HONGKONG	Hong Kong low-voltage power grid	Supported	Supported	Supported	Supported	Supported
24	EN50549-SE	Sweden power grid	Supported	Supported	Supported	Supported	Supported
25	EN50549-PL	Poland power grid	Supported	Supported	Supported	Supported	Supported
26	EN50549-LV	Türkiye power grid	Supported	Supported	Supported	Supported	Supported
27	DENMARK-EN50549-DK1-LV230	Denmark power grid	Supported	Supported	Supported	Supported	Supported
28	DENMARK-EN50549-DK2-LV230	Denmark power grid	Supported	Supported	Supported	Supported	Supported
29	SWITZERLAND-NA/EEA:2020-LV230	Switzerland power grid	Supported	Supported	Supported	Supported	Supported
30	SWITZERLAND-LV230	Switzerland power grid	Supported	Supported	Supported	Supported	Supported
31	AUSTRALIA-AS4777_A-LV230	Australia power grid	Supported	Supported	Supported	Supported	Supported
32	AUSTRALIA-AS4777_B-LV230	Australia power grid	Supported	Supported	Supported	Supported	Supported
33	AUSTRALIA-AS4777_C-LV230	Australia power grid	Supported	Supported	Supported	Supported	Supported
34	AUSTRALIA-AS4777_NZ-LV230	New Zealand power grid	Supported	Supported	Supported	Supported	Supported
35	AS4777	New Zealand power grid	Supported	Supported	Supported	Supported	Supported
36	CZECH-EN50549-LV230	Czech Republic power grid	Supported	Supported	Supported	Supported	Supported

No.	Grid Code	Description	SUN2000-5K-MAP0	SUN2000-6K-MAP0	SUN2000-8K-MAP0	SUN2000-10K-MAP0	SUN2000-12K-MAP0
37	Israel	Israel power grid	Supported	Supported	Supported	Supported	Supported
38	FINLAND-EN50549-LV230	Finland power grid	Supported	Supported	Supported	Supported	Supported
39	ANRE	Romania low-voltage power grid	Supported	Supported	Supported	Supported	Supported
40	NEW CALEDONIA-LV230	New Caledonia power grid	Supported	Supported	Supported	Supported	Supported
41	NC2022	New Caledonia power grid	Supported	Supported	Supported	Supported	Supported
42	Austria	Austria power grid	Supported	Supported	Supported	Supported	Supported
43	KUWAIT	Kuwait power grid	Supported	Supported	Supported	Supported	Supported
44	BAHRAIN	Bahrain power grid	Supported	Supported	Supported	Supported	Supported
45	SAUDI	Saudi Arabia power grid	Supported	Supported	Supported	Supported	Supported
46	LEBANON	Lebanon power grid	Supported	Supported	Supported	Supported	Supported
47	Island-Grid	Grid code for off-grid operation	Supported	Supported	Supported	Supported	Supported
48	Custom (50 Hz)	Reserved	Supported	Supported	Supported	Supported	Supported
49	Custom (60 Hz)	Reserved	Supported	Supported	Supported	Supported	Supported
50	FRANCE-EN50549-230	France FD C11-519-11	Supported	Supported	Supported	Supported	Supported
51	IRELAND-EN50549-LV230	Ireland power grid	Supported	Supported	Supported	Supported	Supported

 Copyright © Huawei Digital Power Technologies Co., Ltd.

B Resetting the Login Password on the Hardware

Step 1 Check that the AC and DC sides of the inverter are both powered on, and indicators and are steady green or blinking slowly for more than 3 minutes.

Step 2 Turn off the AC switch, set the DC SWITCH at the bottom of the inverter to OFF, and wait until all indicators on the inverter panel turn off.

Step 3 Complete the following operations within 4 minutes:

1. Turn on the AC switch and wait for about 90s or until the inverter indicator blinks.
2. Turn off the AC switch and wait about 30s or until all LED indicators on the inverter panel turn off.
3. Turn on the AC switch and wait for about 30s or until all LED indicators on the inverter panel blink and then turn off after about 30s.

Step 4 Wait until the three green LEDs on the inverter panel blink fast and then the three red LEDs blink fast, which indicates that the password is restored.

Step 5 Reset the password within 10 minutes. (If no operation is performed within 10 minutes, all parameters of the inverter remain unchanged.)

1. Wait until the indicator blinks.
2. Connect to the app using the initial WLAN hotspot name (SSID) and initial password (PSW), which can be obtained from the label on the side of the inverter.
3. On the login page, set a new password and log in to the app.

Step 6 Set router and management system parameters to implement remote management.

----End

 Copyright © Huawei Digital Power Technologies Co., Ltd.

NOTICE

You are advised to reset the password in the morning or at night when the solar irradiance is low.

 Copyright © Huawei Digital Power Technologies Co., Ltd.

C Rapid Shutdown

NOTE

- If method 3 is selected for rapid shutdown, log in to the app as an **installer** user to perform local commissioning, choose **Settings** > **Feature parameters** > **Dry contact function**, and set **Dry contact function** to **DI rapid shutdown**.
- The rapid shutdown function is supported only if optimizers are configured for all PV modules.

If optimizers are configured for all PV modules, the PV system can perform a rapid shutdown to decrease the output voltage to below 30 V within 30s.

Perform the following steps to trigger a rapid shutdown:

- Method 1: Turn off the AC switch between the inverter and the power grid (disconnect the voltages of all PV strings connected to the inverter under the AC switch).
- Method 2: Set the **DC SWITCH** of the inverter to **OFF** to trigger a rapid shutdown. The inverter shuts down several minutes later. (Turning off all external switches on the DC side of an inverter can trigger a rapid shutdown, and only the PV strings connected to the inverter is de-energized. Turning off only some external switches cannot trigger a rapid shutdown, and the PV strings may be energized.)
- Method 3: To enable the DI rapid shutdown function, connect a switch to pins DI and GND of the inverter communications terminal. The switch is turned on by default. Turn off the switch to trigger a rapid shutdown. The distance between the switch and the farthest inverter must be less than or equal to 10 m.
- Method 4: If **AFCI** is enabled, the inverter automatically performs arc fault detection and triggers a rapid shutdown when AFCI lock protection is implemented.

 Copyright © Huawei Digital Power Technologies Co., Ltd.

D Baud Rate Negotiation

Baud rate negotiation increases the communications rate between the inverter and devices such as batteries and power meters, and between the inverter and devices such as the Smart Dongles and the SmartAssistant, solving or relieving communication congestion.

- During device search in a new plant, the system automatically negotiates the baud rate.
- When replacing or adding inverters, batteries, power meters, the Smart Dongle, or the SmartAssistant at an existing plant, you need to manually send local commands on the app to reset the baud rate between devices and negotiate a higher rate.

NOTE

Users can send the baud rate negotiation commands on the app in two networking modes: SmartAssistant networking and Smart Dongle networking.

Table D-1 Manual baud rate negotiation on the app

Networking Mode	Scenario	Operation
SmartAssistant networking	Replacing the SmartAssistant	1. Use the app to locally scan the QR code to connect to the SmartAssistant. 2. Access the **Communication settings** screen, choose **RS485 Settings > Baud Rate Negotiation**, and tap **9600** and **Negotiate a higher rate**.

 Copyright © Huawei Digital Power Technologies Co., Ltd.

Networking Mode	Scenario	Operation
	Replacing or adding an inverter	1. Use the app to locally scan the QR code to connect to the SmartAssistant. 2. Access the **Communication settings** screen, choose **RS485 Settings > Baud Rate Negotiation**, and tap **9600** and **Negotiate a higher rate**. 3. Use the app to locally scan the QR code to connect to the inverter. 4. Access the **Communication configuration** screen, choose **RS485** > **RS485_2** > **Baud Rate Negotiation**, and tap **9600** and **Negotiate a higher rate**.
	Replacing or adding an RS485_2 device (such as a battery or power meter)	1. Use the app to locally scan the QR code to connect to the inverter. 2. Access the **Communication configuration** screen, choose **RS485** > **RS485_2** > **Baud Rate Negotiation**, and tap **9600** and **Negotiate a higher rate**.
Smart Dongle networking	Replacing the Smart Dongle	1. Use the app to locally scan the QR code to connect to the inverter. 2. Access the **Communication configuration** screen, choose **RS485** > **RS485_1** > **Baud Rate Negotiation**, and tap **9600** and **Negotiate a higher rate**.
	Replacing or adding an inverter	1. Use the app to locally scan the QR code to connect to the inverter. 2. Access the **Communication configuration** screen, choose **RS485** > **RS485_1** > **Baud Rate Negotiation**, and tap **9600** and **Negotiate a higher rate**. 3. Access the **Communication configuration** screen, choose **RS485** > **RS485_2** > **Baud Rate Negotiation**, and tap **9600** and **Negotiate a higher rate**.

 Copyright © Huawei Digital Power Technologies Co., Ltd.

Networking Mode	Scenario	Operation
	Replacing or adding an RS485_2 device (such as a battery or power meter)	1. Use the app to locally scan the QR code to connect to the inverter. 2. Access the **Communication configuration** screen, choose **RS485** > **RS485_2** > **Baud Rate Negotiation**, and tap **9600** and **Negotiate a higher rate**.

Troubleshooting

If manual baud rate negotiation fails, refer to the following troubleshooting measures.

Table D-2 Troubleshooting measures

Scenario	Troubleshooting
Negotiation failed	1. Check whether the device cables are connected properly. If no, connect the device cables correctly. 2. Check whether service operations such as upgrade and log export are performed on the management system. If yes, perform baud rate negotiation again after such operations are complete. 3. To replace an RS485_2 device (such as a battery or power meter), choose **Maintenance > Subdevice management** on the home screen, touch and hold the replaced RS485_2 device to delete it. 4. Perform baud rate negotiation again. 5. When replacing or adding an inverter or an RS485_2 device (such as a battery or power meter), if you tap **Negotiate a higher rate** and a message "Negotiation failed. The southbound device does not support the rate." is displayed, it indicates that the device does not support baud rate negotiation. In this case, you only need to tap **9600**. 6. If the fault persists, contact your vendor.

 Copyright © Huawei Digital Power Technologies Co., Ltd.

E Contact Information

If you have any questions about this product, please contact us.

https://digitalpower.huawei.com

Path: **About Us** > **Contact Us** > **Global Service Hotlines**

To ensure faster and better services, we kindly request your assistance in providing the following information:

- Model
- Serial number (SN)
- Software version
- Alarm ID or name
- Brief description of the fault symptom

 Copyright © Huawei Digital Power Technologies Co., Ltd.

F Digital Power Customer Service

https://digitalpower.huawei.com/robotchat/

 Copyright © Huawei Digital Power Technologies Co., Ltd.

G Certificate Management and Maintenance

G.1 Initial Certificate Risk Disclaimer

Huawei's initial certificates are mandatory identity credentials for Huawei devices before delivery. The disclaimer statements for using the certificates are as follows:

1. Huawei's initial certificates are used only to establish initial security channels for devices to access the customer network during deployment.
2. Initial certificates have a validity period. The validity period of Huawei's root certificates expires in 2041 and 2099, respectively, and the validity period of identity certificates expires earlier than that of root certificates.
3. After devices access the customer network, the management responsibilities of the devices and digital certificates are transferred to the customer. Huawei recommends that the customer replace the initial certificates used by devices on the live network with customer's own certificates, and use certificates with a short validity period and periodically replace the certificates in accordance with industry best practices. This helps mitigate the risk of private key leakage of digital certificates and prevent service interruption caused by certificate expiration.

For details about the rights and responsibilities related to initial certificates, see **Rights and Responsibilities of Initial Digital Certificates on Huawei Devices**.

G.2 Application Scenarios of Initial Certificates

Table G-1 Certificate list

Usage	Scenario	Replacement Guide
App communication certificate	Authenticates the validity of the inverter when the mobile app connects to and communicates with the inverter through Modbus-TCP.	**G.3 Updating a Certificate**

 Copyright © Huawei Digital Power Technologies Co., Ltd.

G.3 Updating a Certificate

Initial certificates are used only for commissioning and are not for commercial use. Replace the initial certificates with new ones to improve communication security. To prevent security risks caused by expired certificates, you are advised to periodically update certificates.

Prerequisites

You have applied for a new certificate from the CA and have obtained the new certificate files. **Table G-2** lists the certificate requirements.

Table G-2 Certificate requirements

Parameter	Requirement
Certificate signature algorithm	Use industry-leading security algorithms, such as sha256WithRSAEncryption or sha256ECDSA.
Key length	• For keys encrypted using RSA, the recommended length is 3072 bits or longer. • For keys encrypted using ECDSA, the length can be 256 or 384 bits. **NOTE** RSA keys shorter than 2048 bits or ECDSA keys shorter than 256 bits are insecure. For security purposes, ensure that the private key of the ER certificate is an RSA key of 3072 bits or longer or an ECDSA key of 256 bits or longer.
Certificate storage format	.crt and .cer are supported. The certificate in .crt format must be encoded using Base64. • The certificate file in .crt format is as follows: – **client.crt**: identity certificate file – **client_key.pem**: private key of the identity certificate • The certificate file in .cer format is as follows: – **client.cer**: identity certificate file – **client_key.pem**: private key of the identity certificate.
Private key file format	PKCS#8 format.
Password complexity of the private key file	Contain 8 to 64 characters, including at least two types of the following: • Uppercase letters • Lowercase letters • Digits • Special characters (excluding <>;+&/\\|%(),`$)

 Copyright © Huawei Digital Power Technologies Co., Ltd.

Procedure

1. Log in to the app using an installer account and use the app to locally scan the QR code to connect to the inverter.
2. Choose **Set** > **Communication configuration** > **Certificate management**.
3. Select the certificate to be replaced, upload the corresponding certificates (root certificate, customer certificate, and key file), and enter the key password to replace the certificate.
4. After the replacement is complete, tap **Replace current certificate**.

 Copyright © Huawei Digital Power Technologies Co., Ltd.

H Acronyms and Abbreviations

A	
AFCI	Arc-fault Circuit Interrupter
L	
LED	Light Emitting Diode
M	
MPP	Maximum Power Point
MPPT	Maximum Power Point Tracking
P	
PE	Protective Earthing
PID	Potential Induced Degradation
PV	Photovoltaic
R	
RH	Relative Humidity
S	
SOC	State of Charge

 Copyright © Huawei Digital Power Technologies Co., Ltd.