Tobbie Robot

Your adorable smart friend

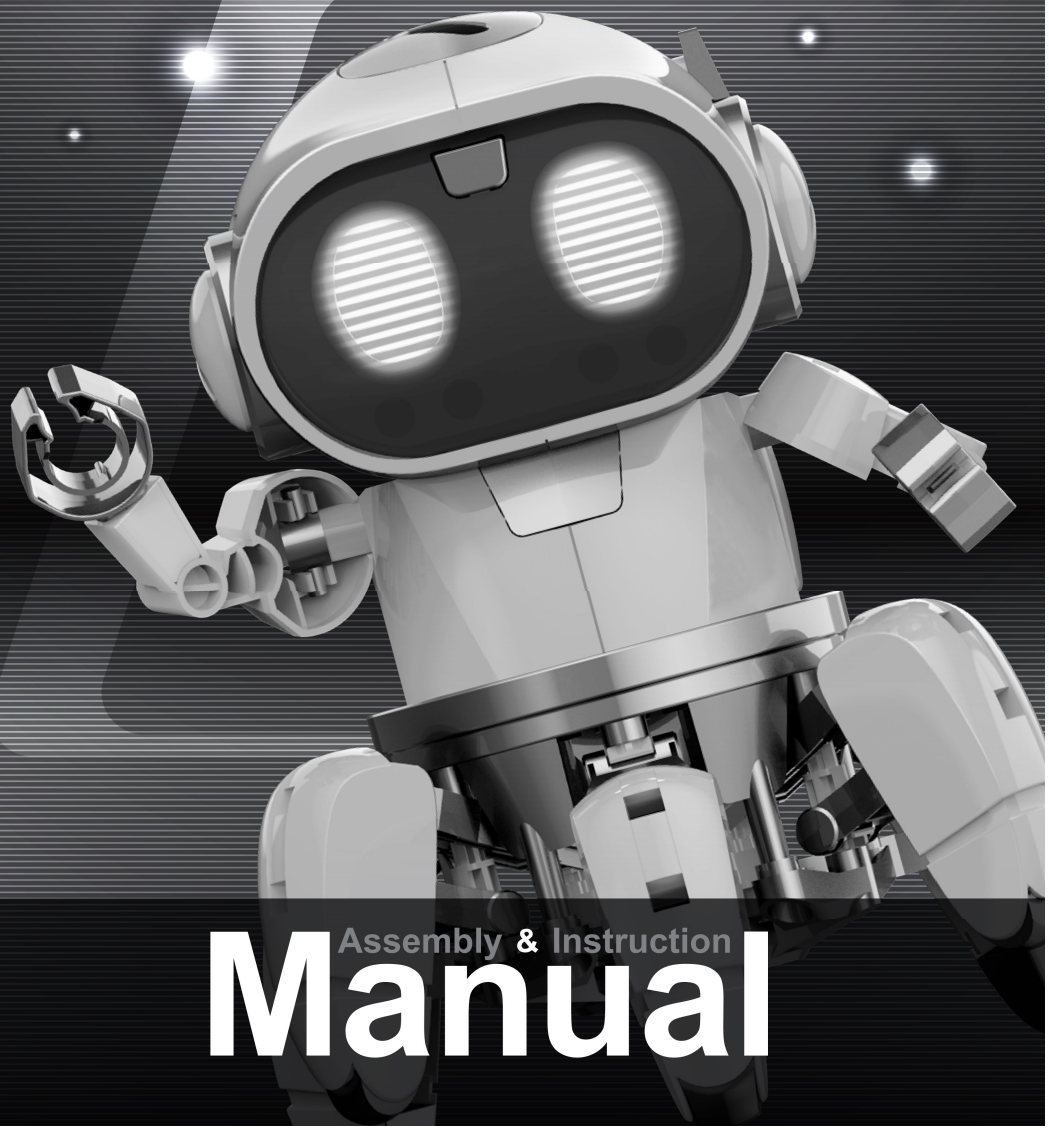

Assembly & Instruction

Manual

CONTENTS

Product Introduction 1
Tools You May Need 1
Mechanical Parts List 1
Plastic Parts 3
Tip:Cut Off The Burrs Before Assembly 3
Body Module Assembly 4
Head Module Assembly 10
Feet & Arms Module Assembly 24
How To Replace Batteries 26
How To Play 27
Warning 29
Trouble Shooting 30

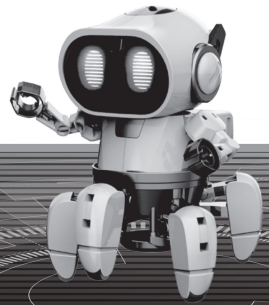

Tobbie The Robot

Product Introduction

Tobbie is an intelligent six legs robot which provides great interaction with children. Tobbie has two programmed modes to follow or avoid objects. In "Follow Me" mode, Tobbie follows the object which ever approaches it, and makes it feels like an obedient pet. Possessing IR auto detect, Tobbie can avoid obstacle in the "Explore" mode and find a new route to keep moving. The little robot offers wonderful sound and light effect which develops its own emotions and gestures, just like a living pet.

Try to challenge Tobbie and figure out what it can do. Create a maze for it or allow it to follow you. Most of all, do not treat it as a normal robot, but an adorable smart friend.

Tools You May Need

Diagonal Cutter	Screwdriver	Battery(AAA) x 4
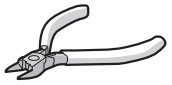		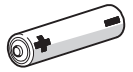 Alkaline batteries are recommended

Mechanical Parts List

! Product contains functional edges and sharp points.

P1 Pinion Gear(White)	QTY
	2

P2 Gear 32/10T(Gray)	QTY
	1

P3 Gear 32T(Blue)	QTY
	1

P4 Gear 36/14T(Green)	QTY
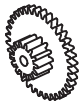	1

P5 Gear 36/14T(White)	QTY
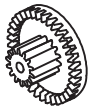	2

P6 Gear 36T(Orange)	QTY
	1

P7 Gear 40/10T(Pink)	QTY
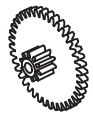	1

P8 Gear 10T(Orange)	QTY
	2

P9 Tapping Screw	QTY
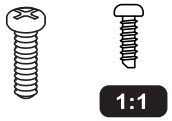	20

P10 Tapping Screw	QTY
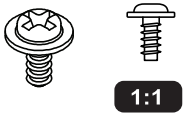	4

P11 Shaft (Short)	QTY
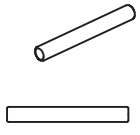	3

P12 Shaft (Long)	QTY
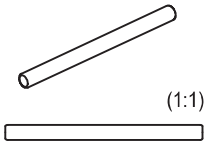	2

P13 Motor With Connector	QTY
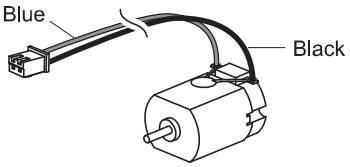	1

P14 Motor With Connector	QTY
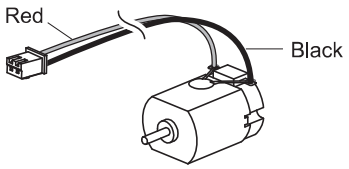	1

P15 Battery Holder With Connector	QTY
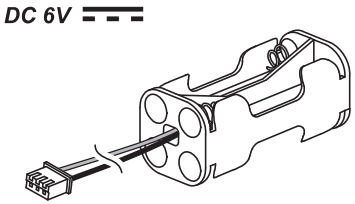	1

P16 PC Board	QTY
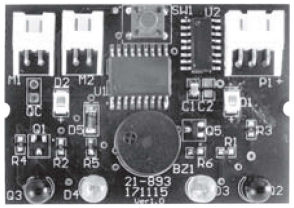	1

P17 Sticker	QTY
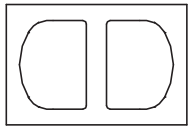	1

Plastic Parts

Cut the plastic parts when they are required. Do not cut them in advance.

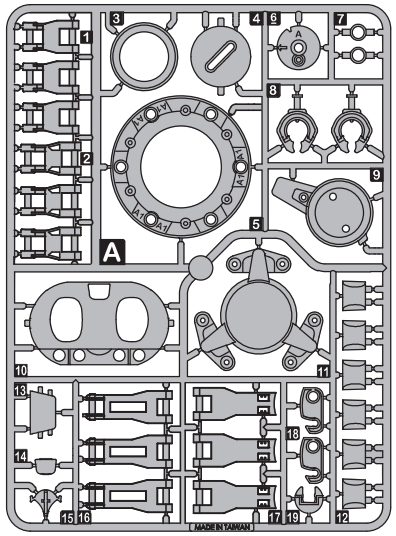

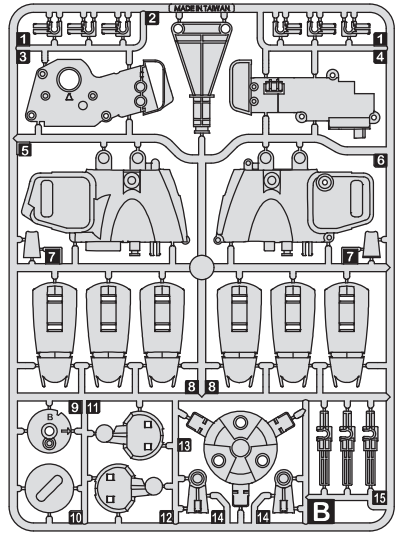

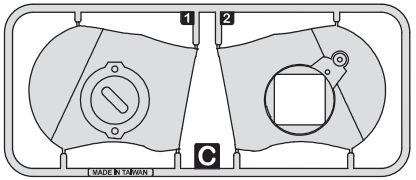

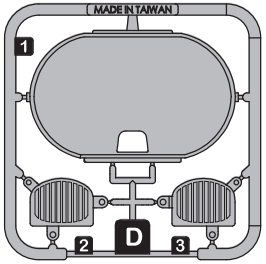

Tip:cut off the burrs before assembly

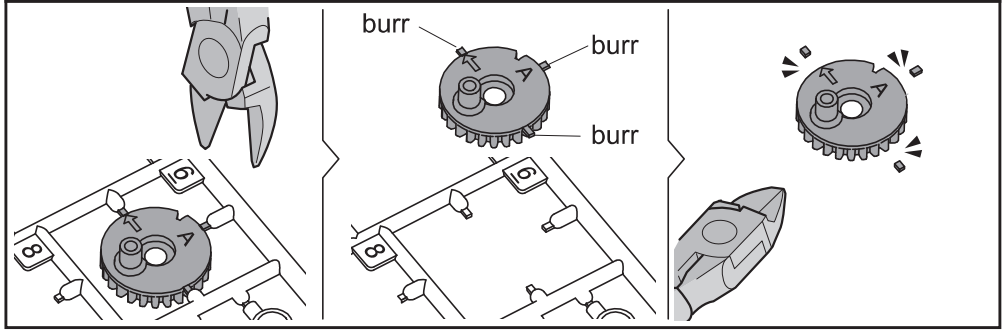

Body Module Assembly

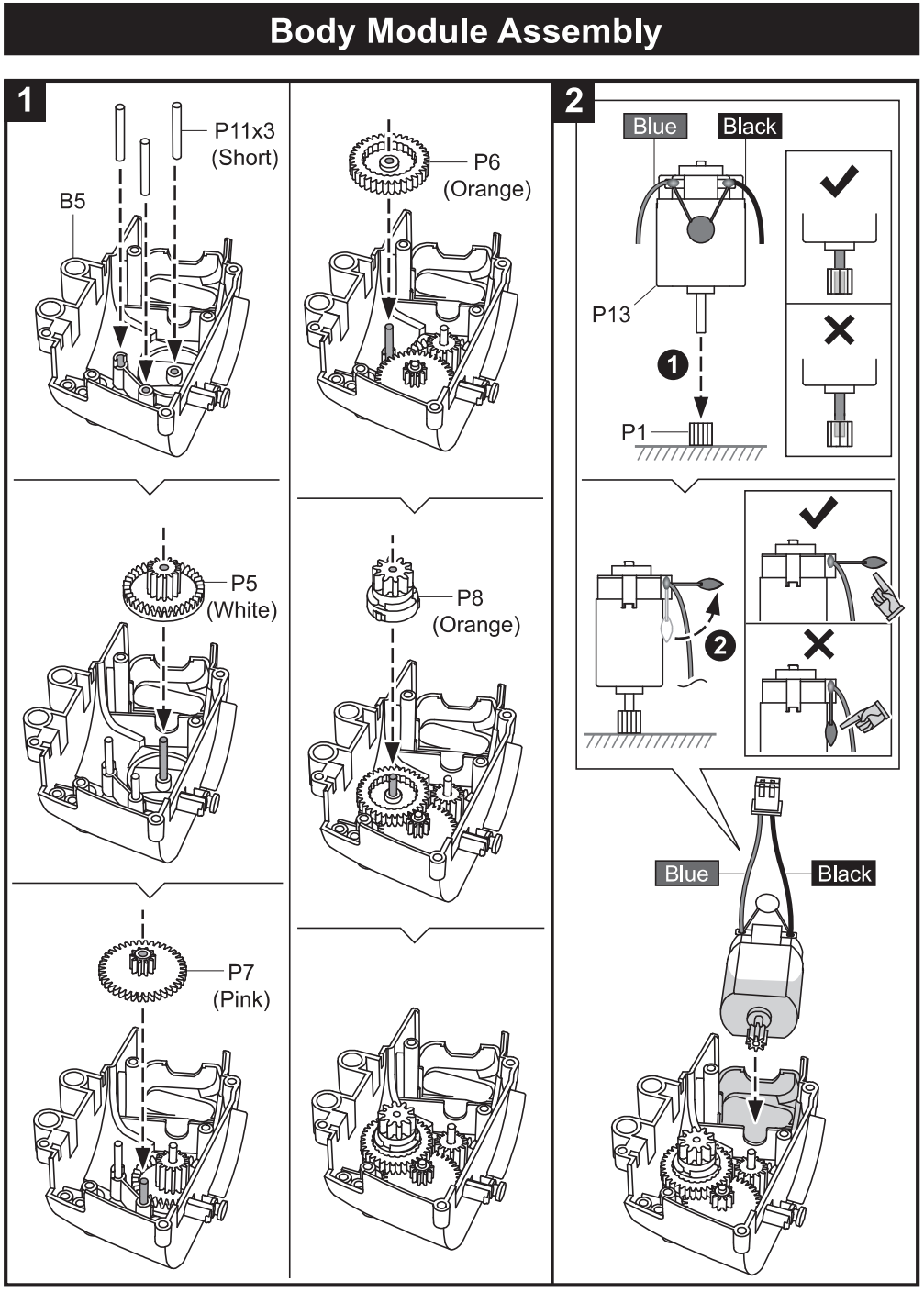

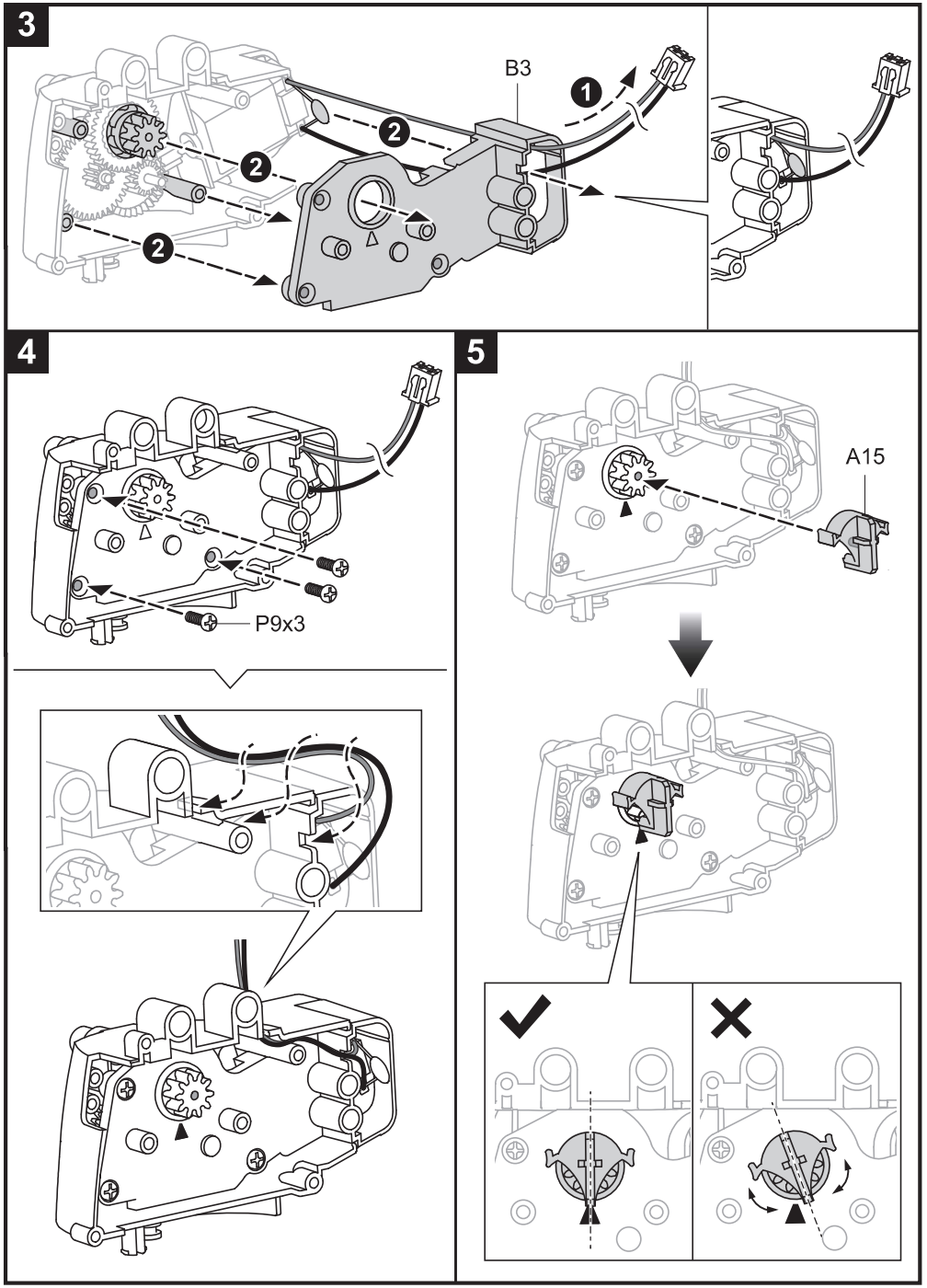

6

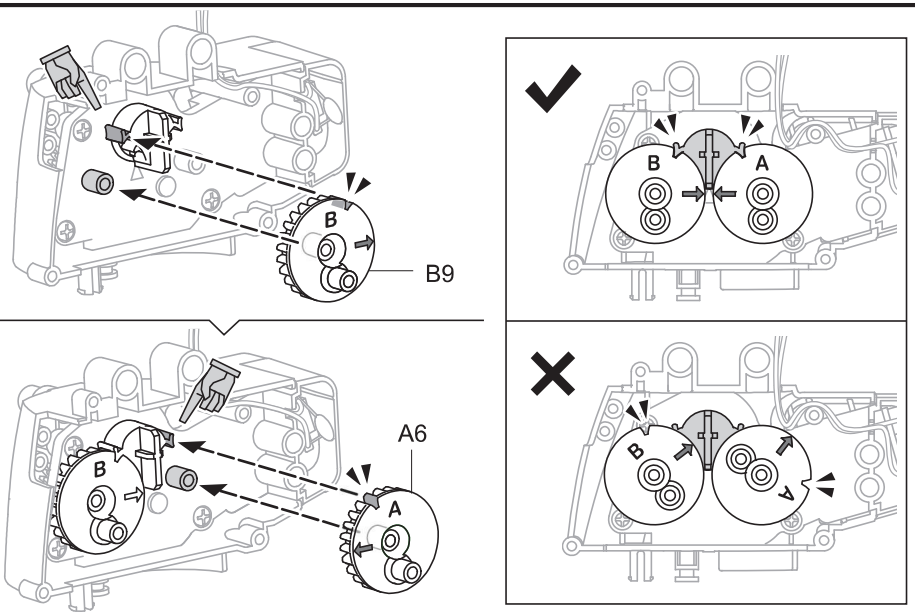

7

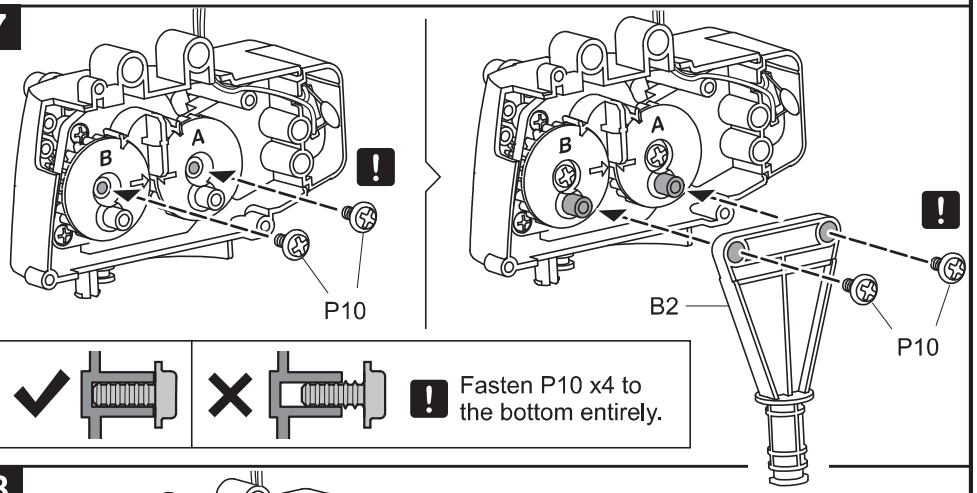

! Fasten P10 x4 to the bottom entirely.

8

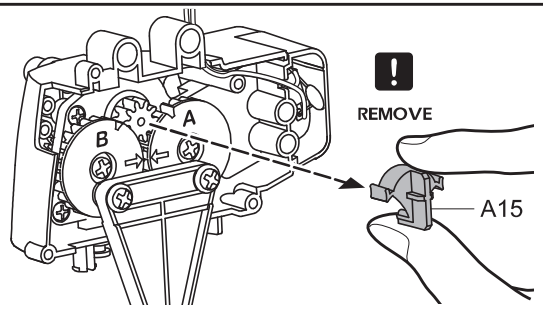

! **Important** : Remove assistance tool-A15 after above steps are finished.

9

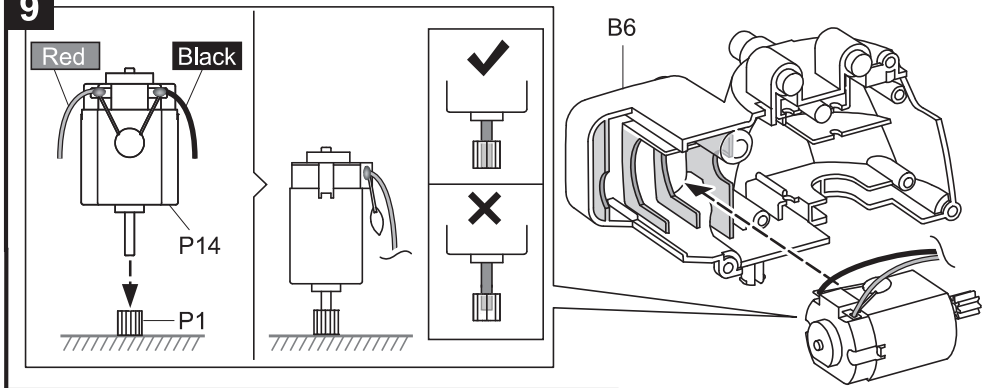

10

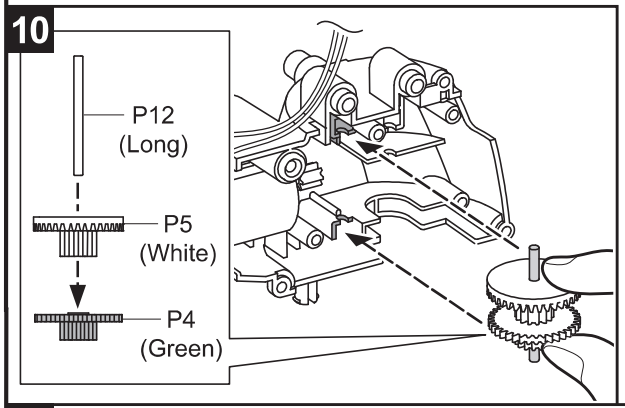

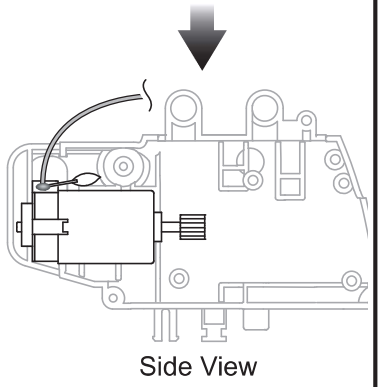

11

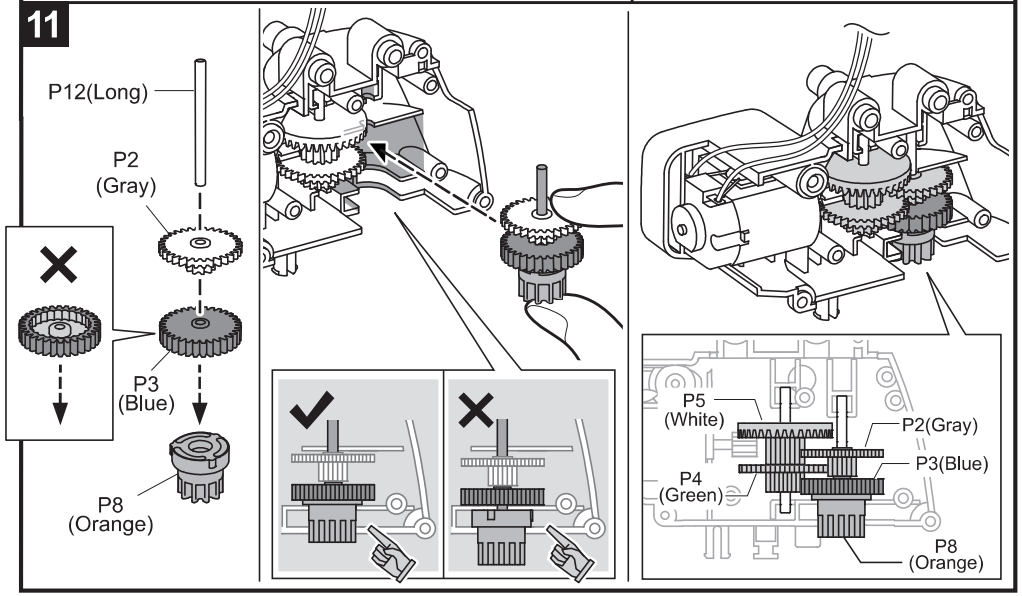

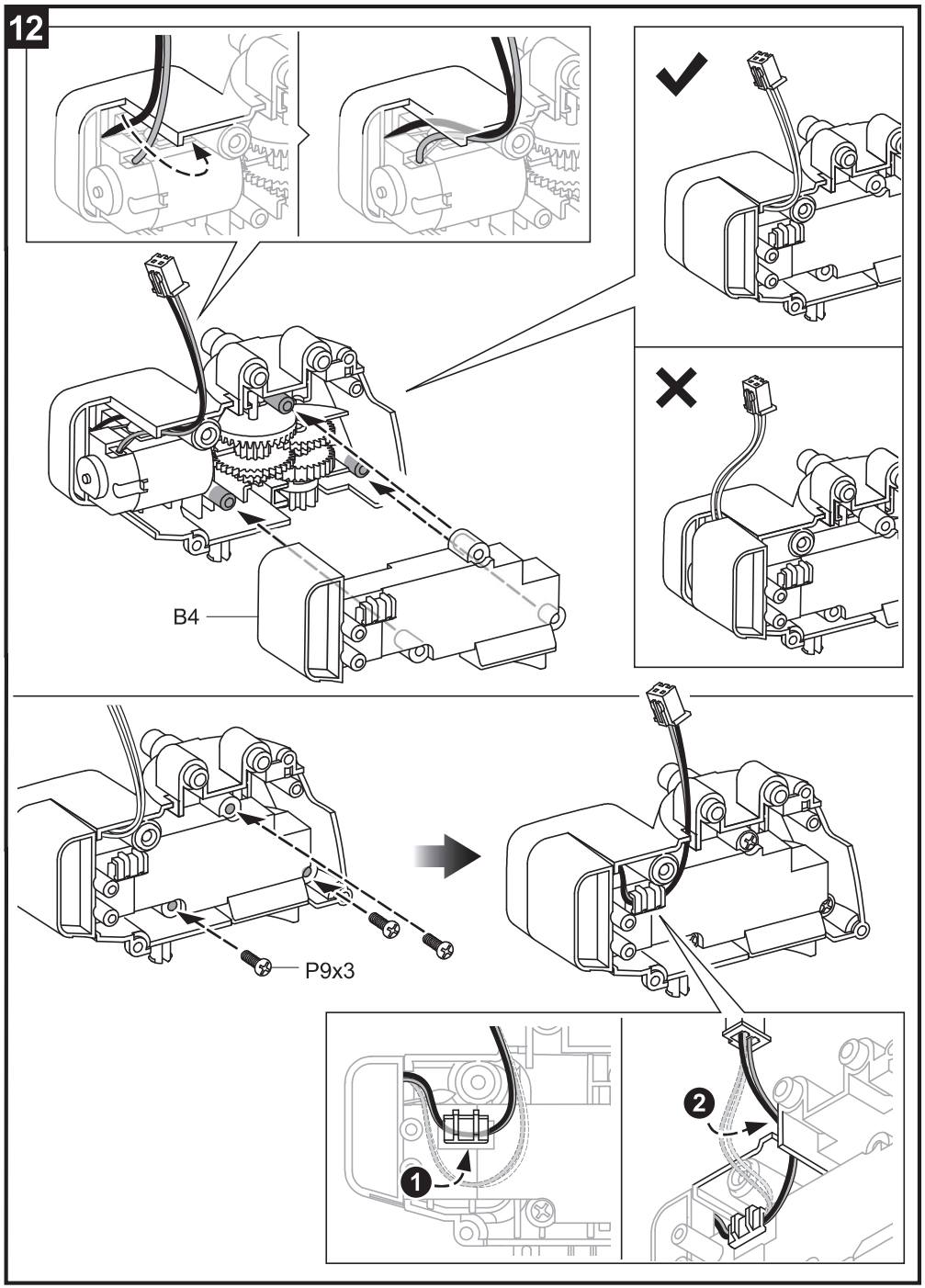
12
B4
P9x3
1
2

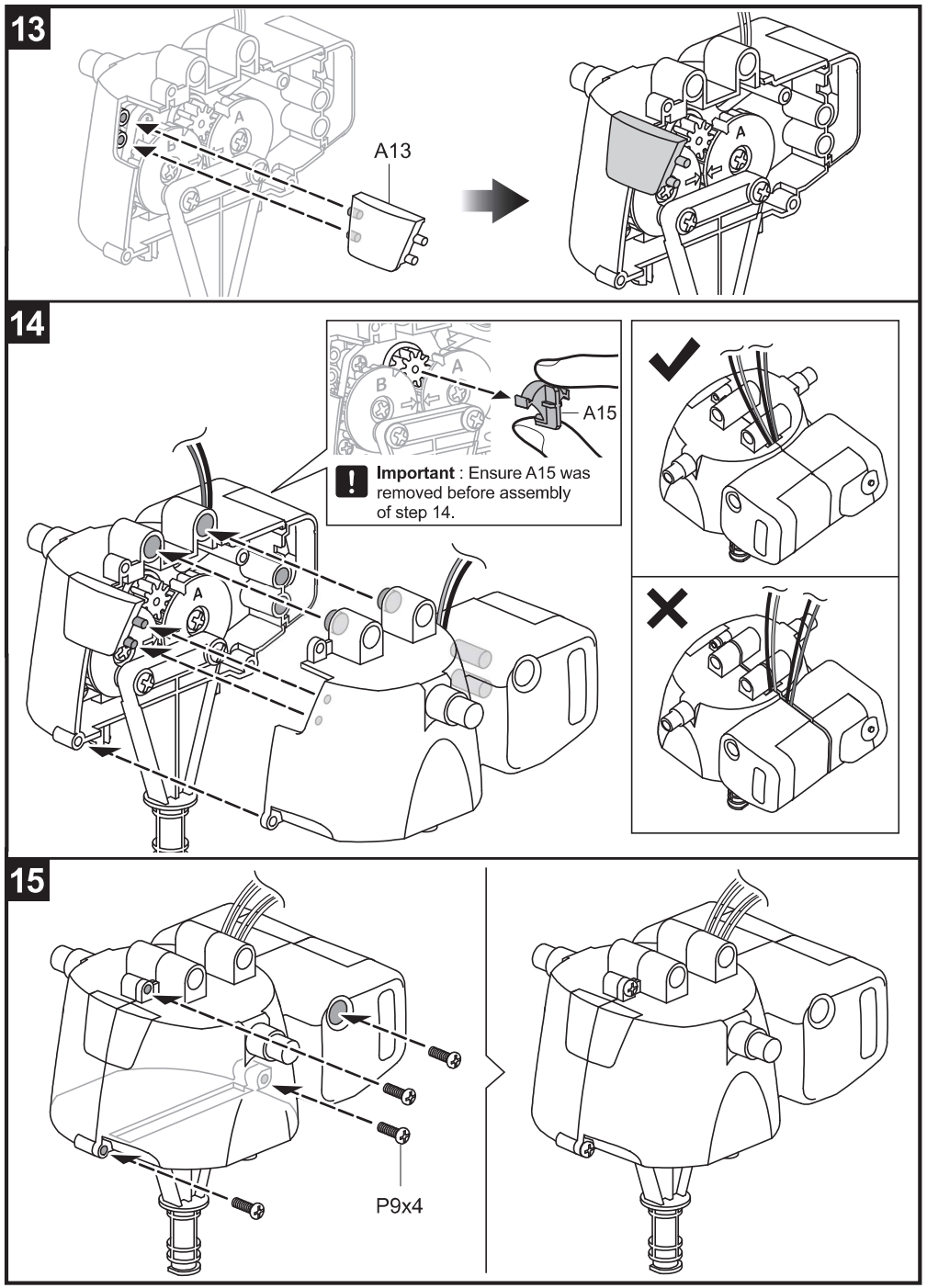
13
A13
14
A15
Important : Ensure A15 was removed before assembly of step 14.
15
P9x4

Head Module Assembly

1

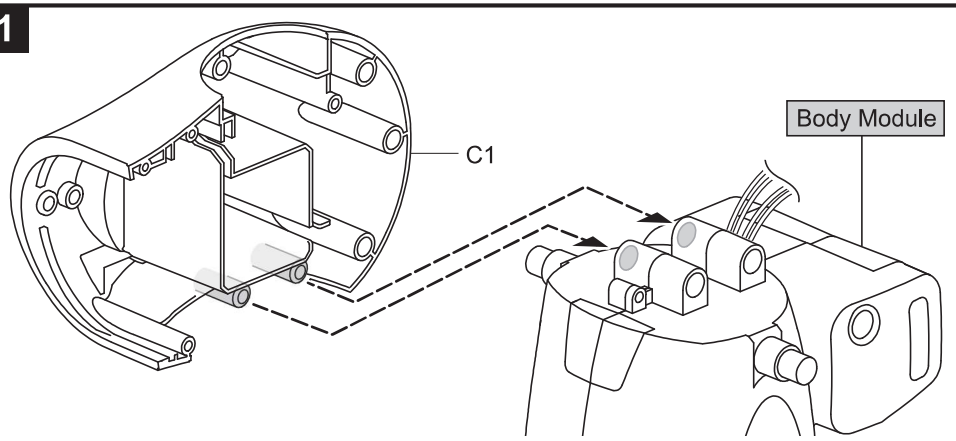

2

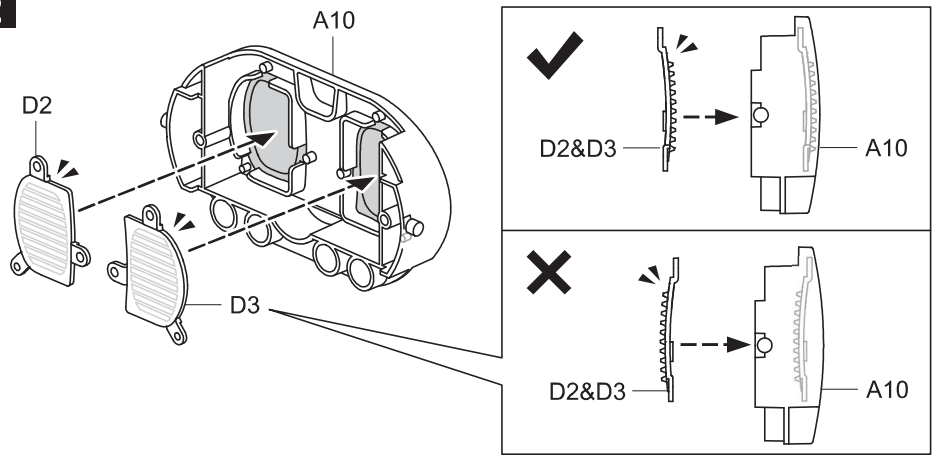

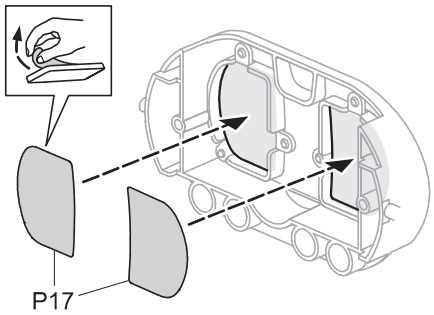

*P17 is on a white sticker sheet

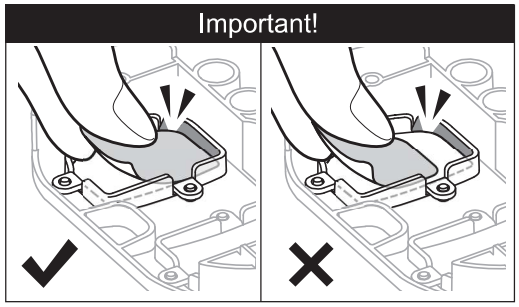

Post P17 against corner of indent in A10

3

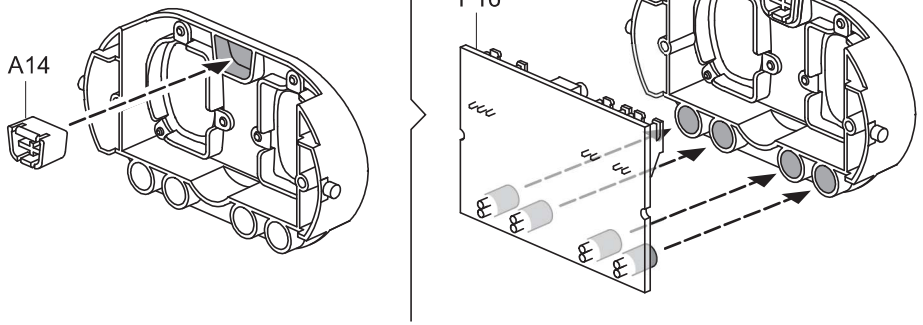

4

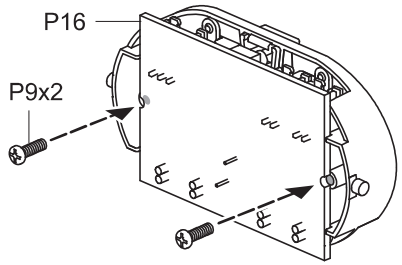

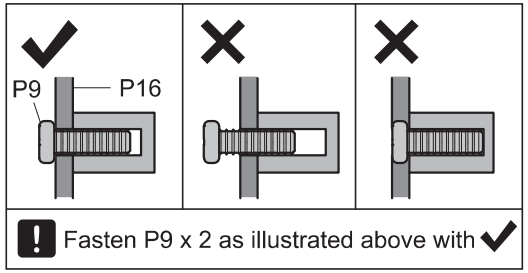

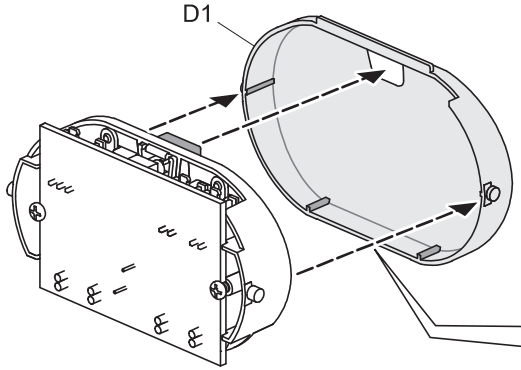

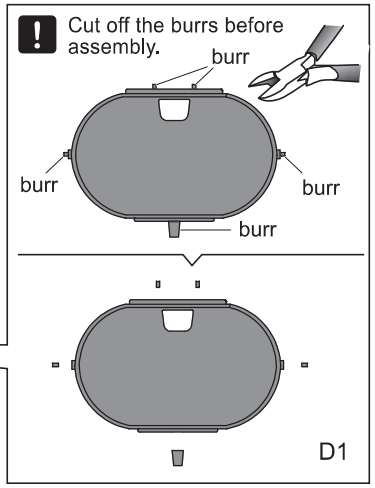

5

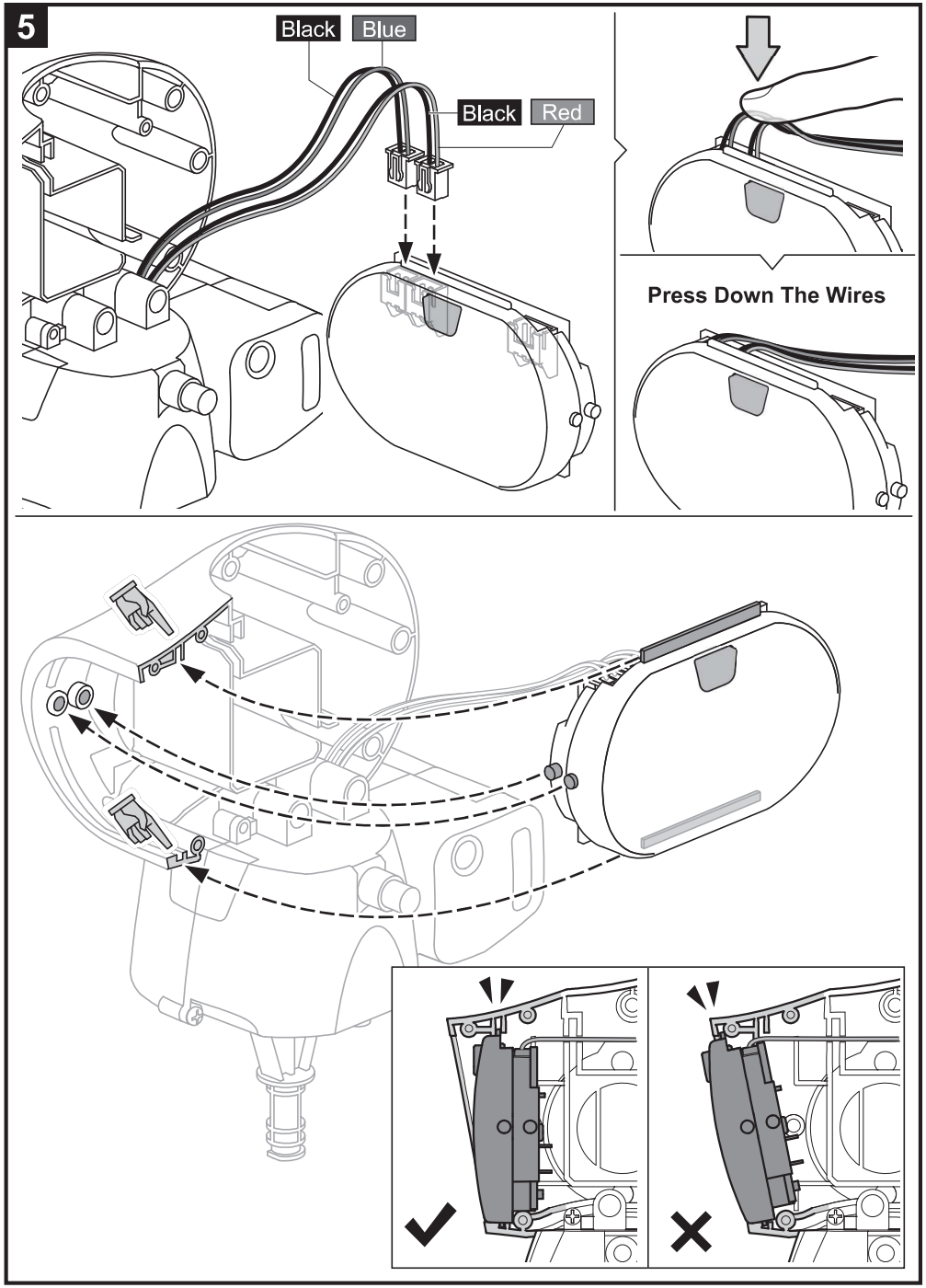

6

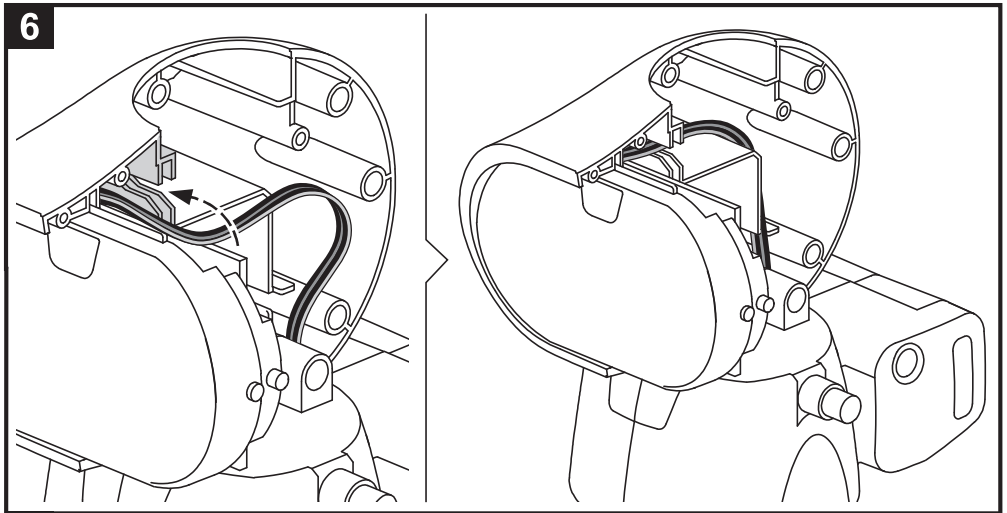

7

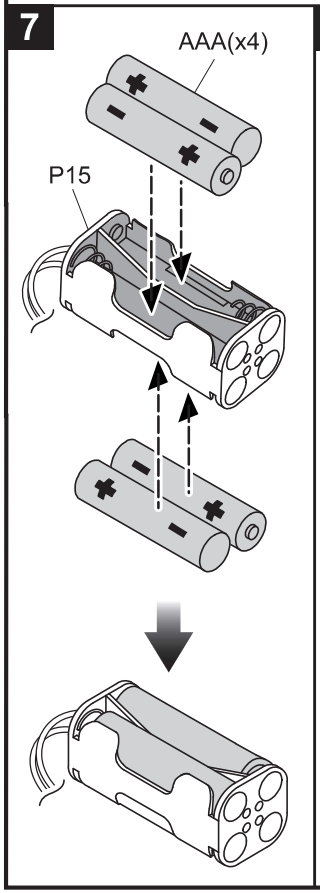

8

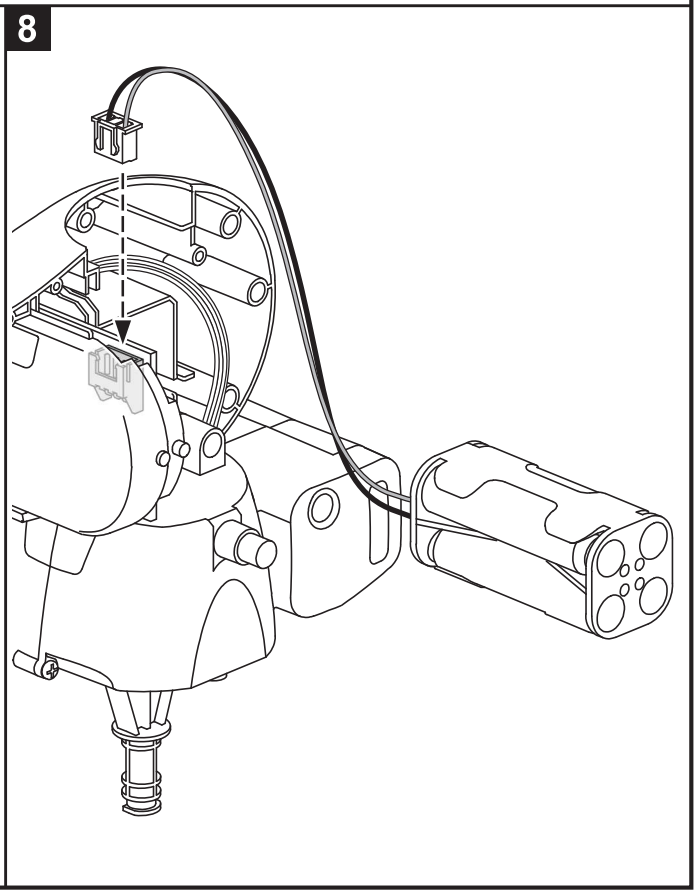

9

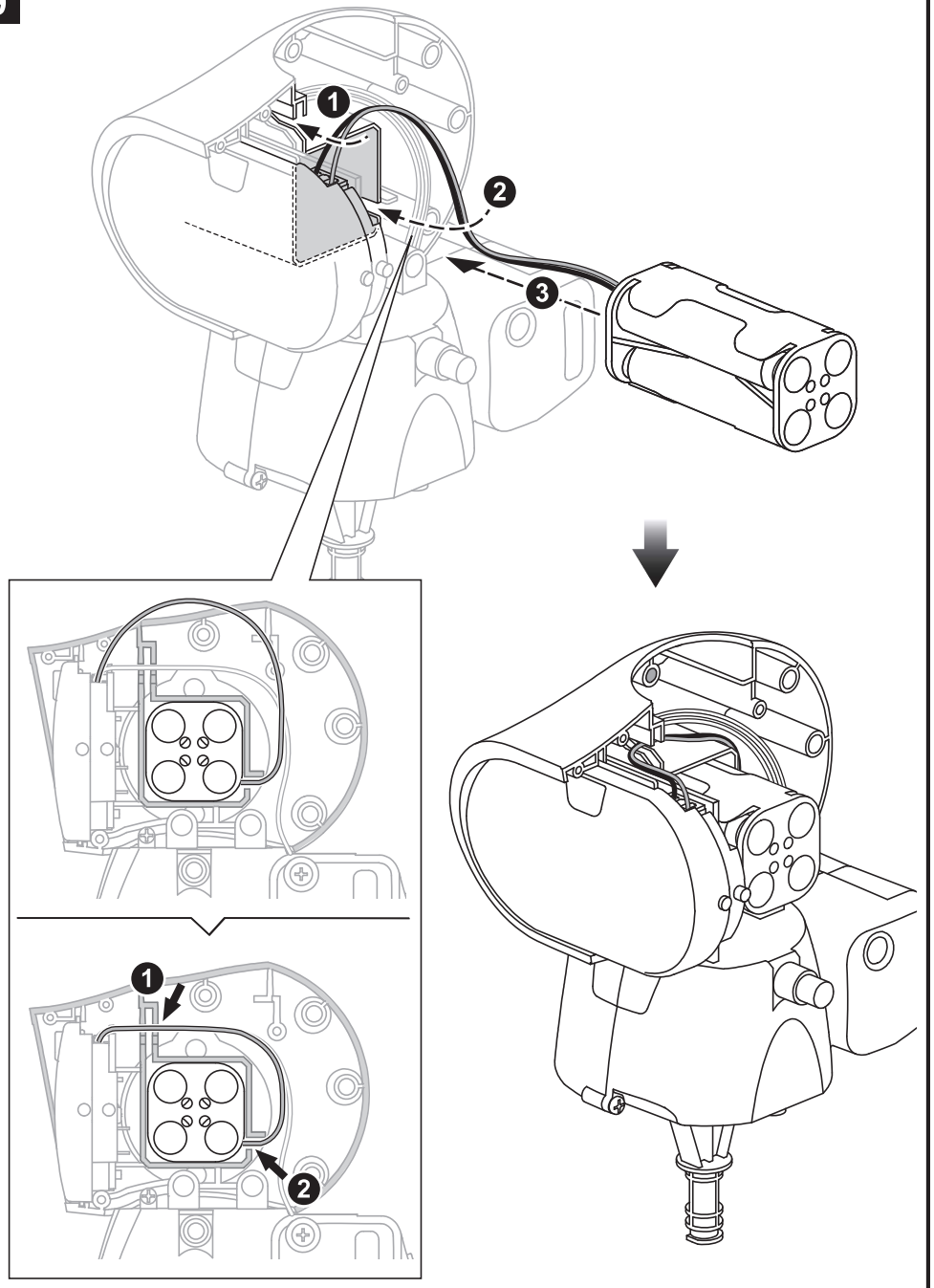

10

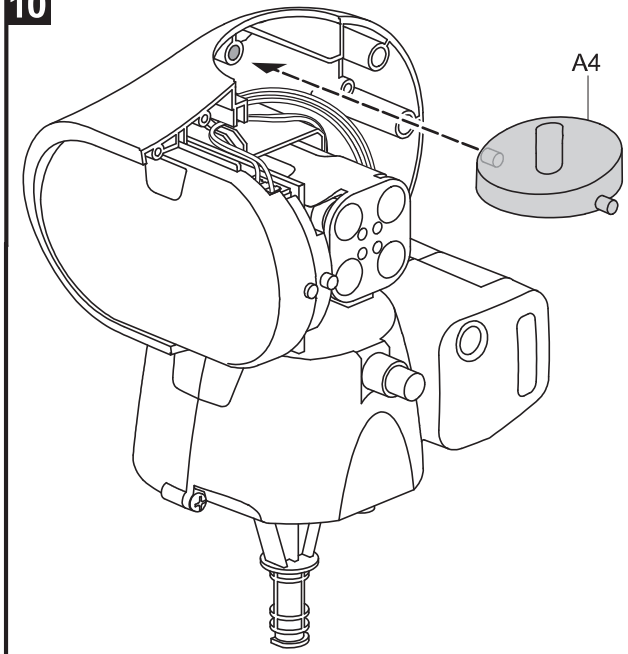

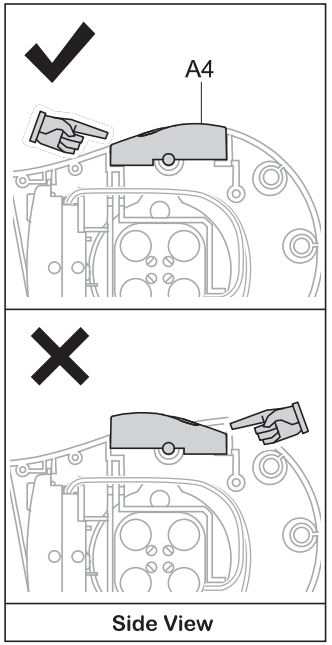

11

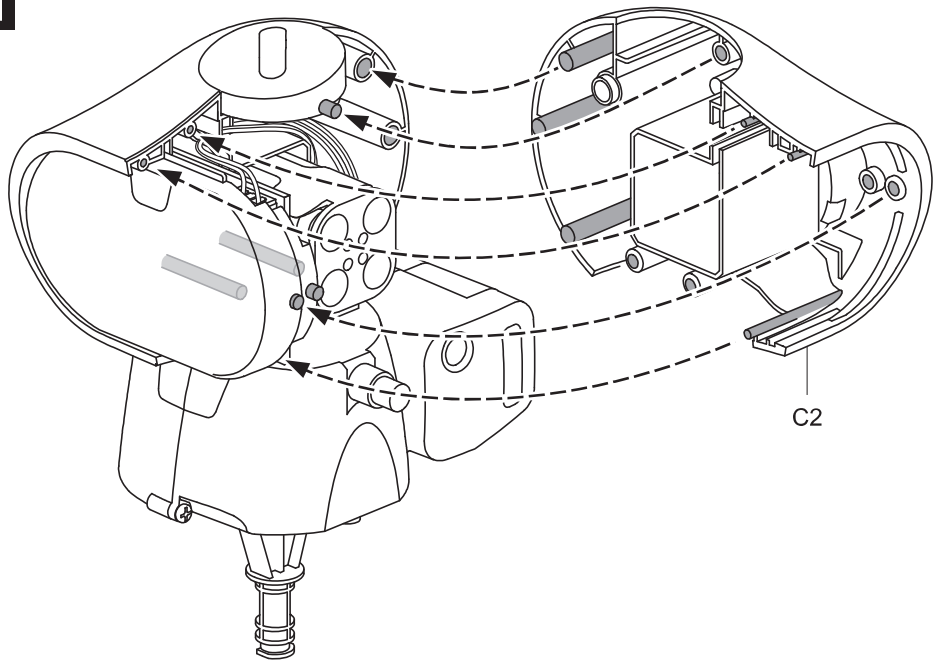

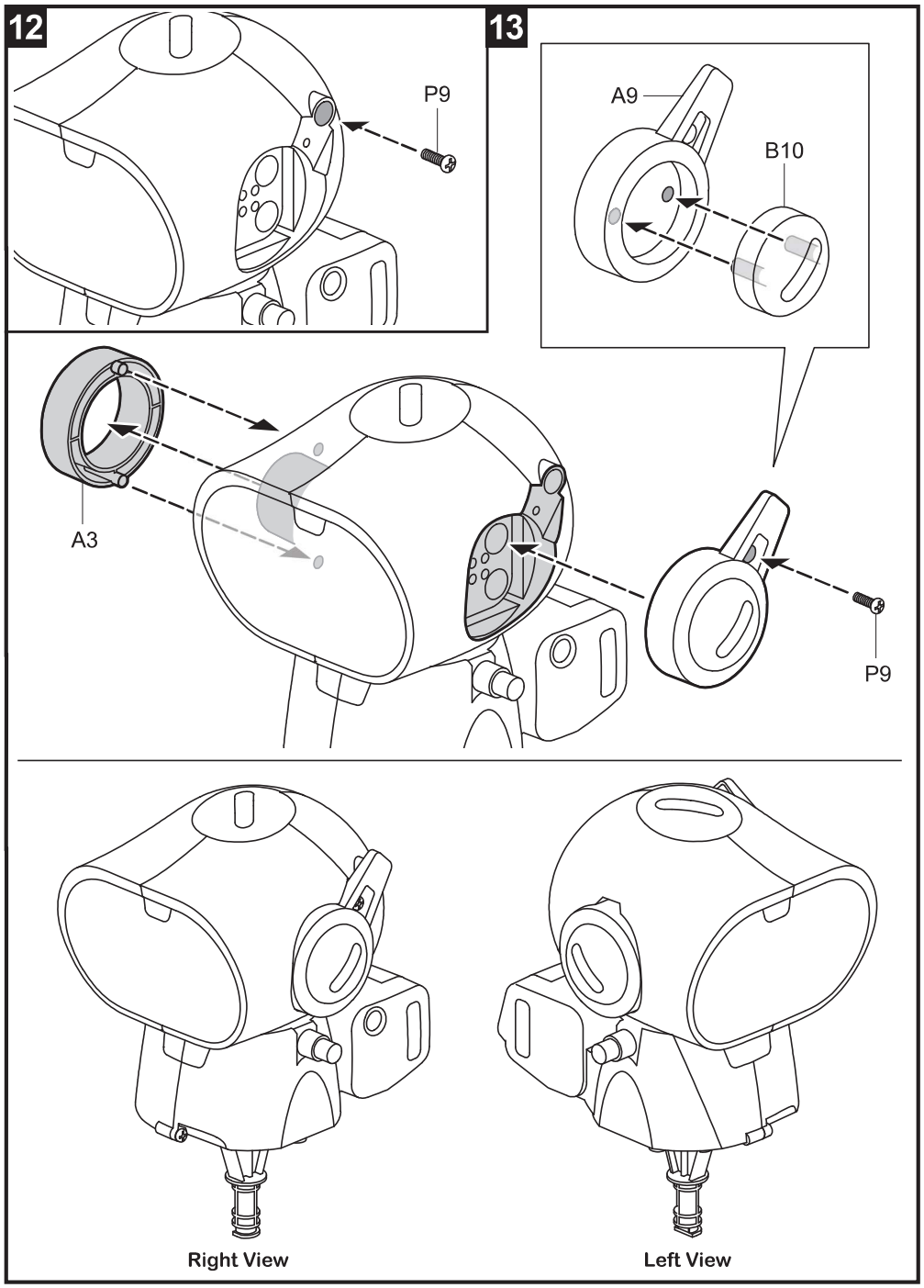
12
P9
13
A9
B10
A3
P9
Right View
Left View

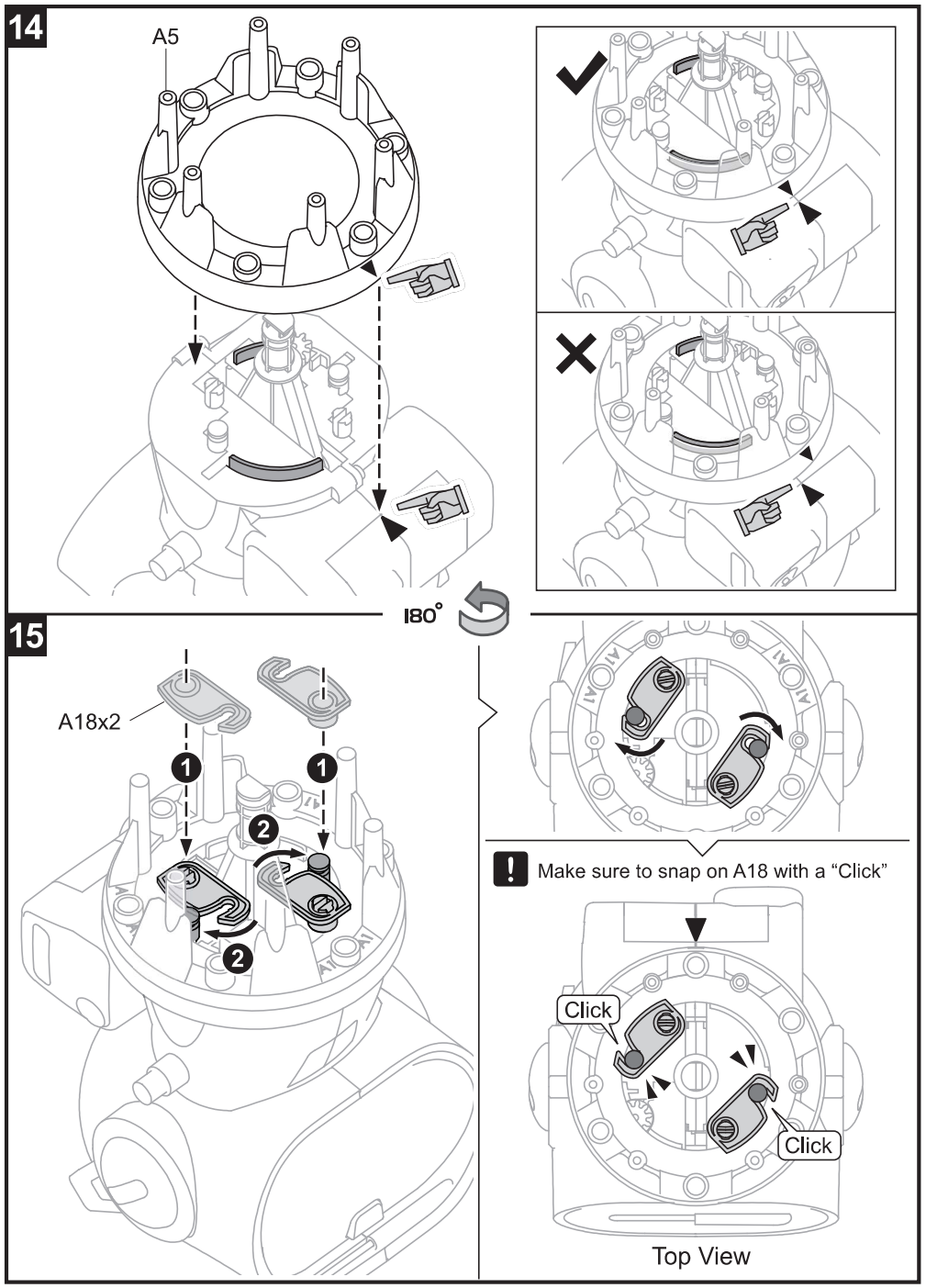
14
A5
180°
15
A18x2
1
2
Make sure to snap on A18 with a “Click”
Click
Click
Top View

16

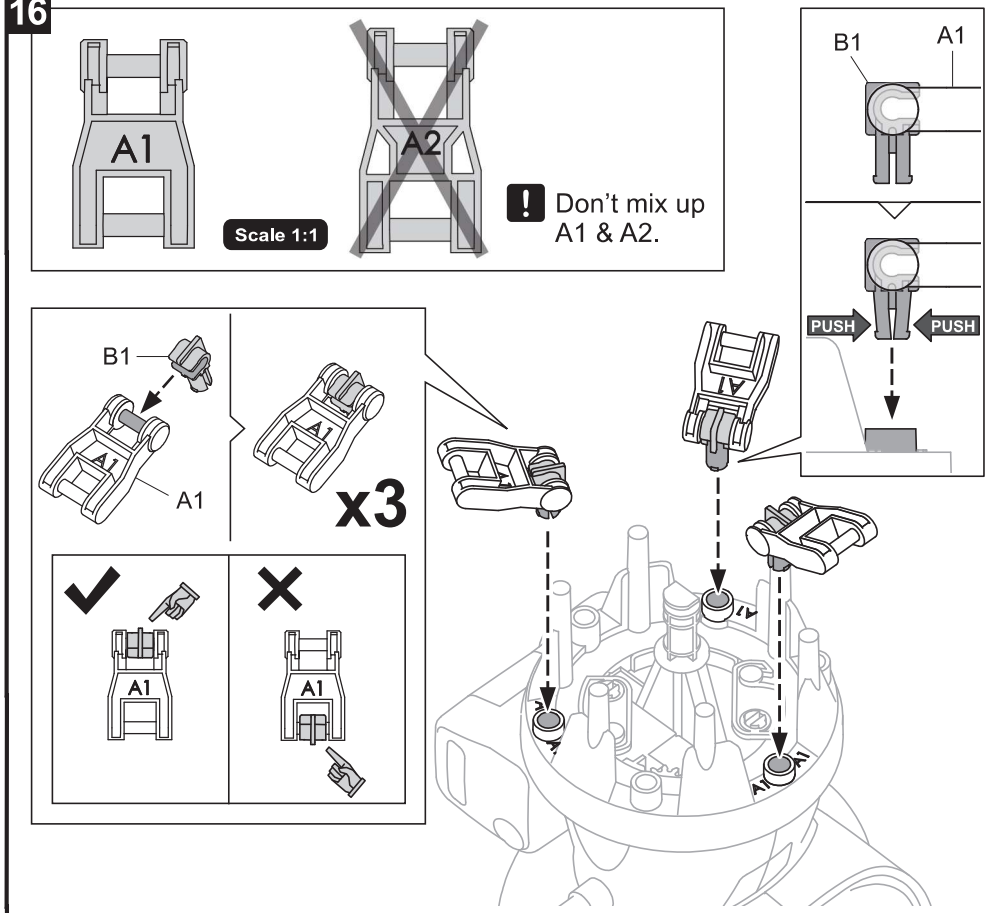
A1
A2
Scale 1:1
Don't mix up A1 & A2.
B1
A1
PUSH
PUSH
x3
Top View
Top View

17

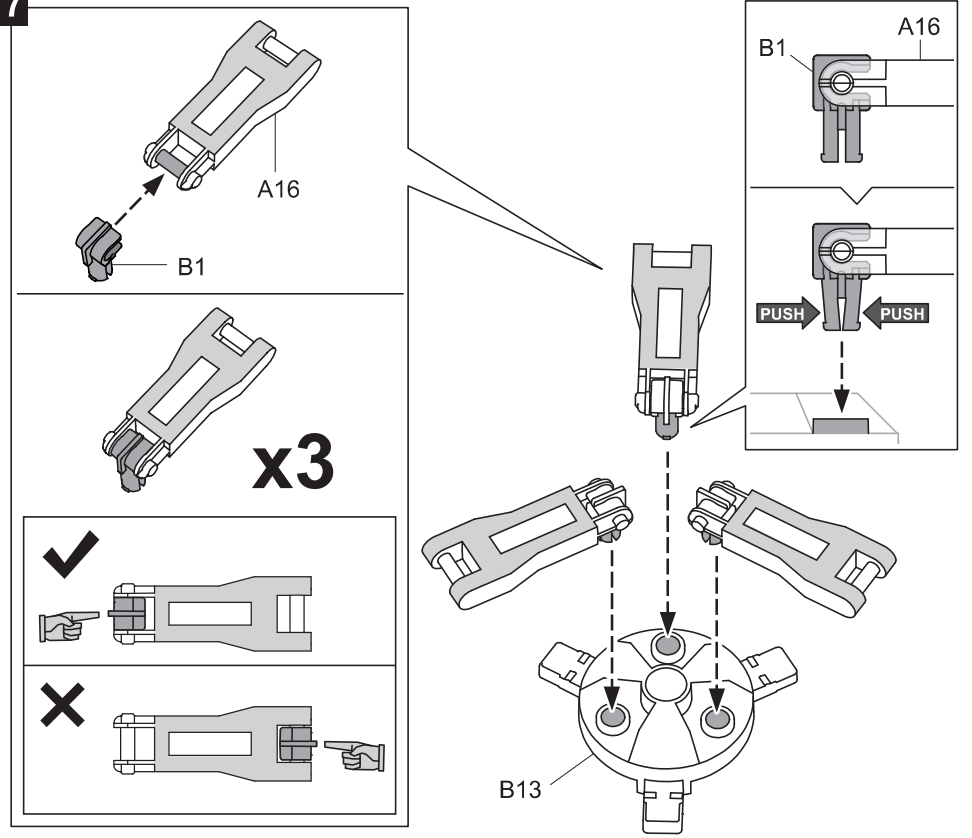
A16
B1
x3
B1
A16
PUSH
PUSH
B13

18

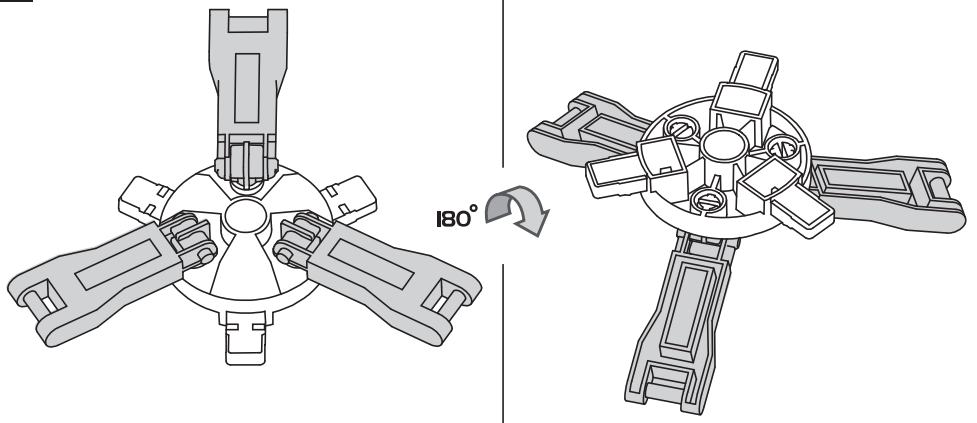
180°

19

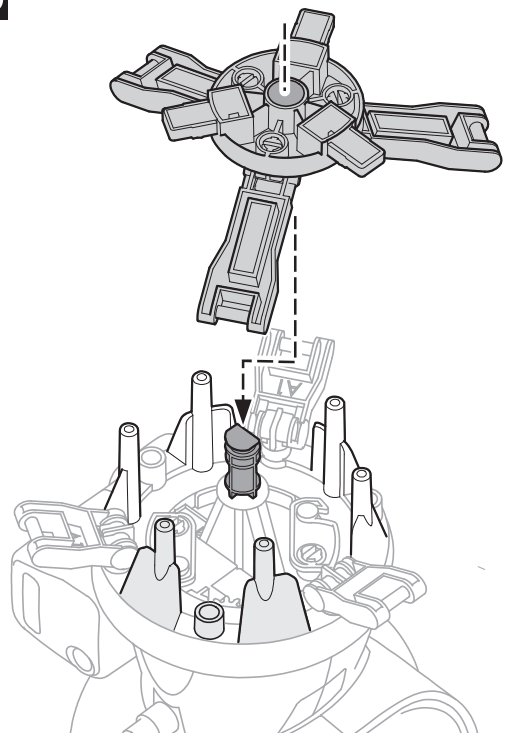

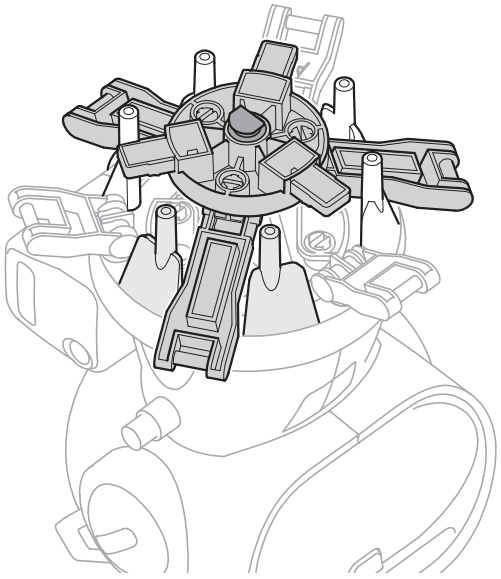

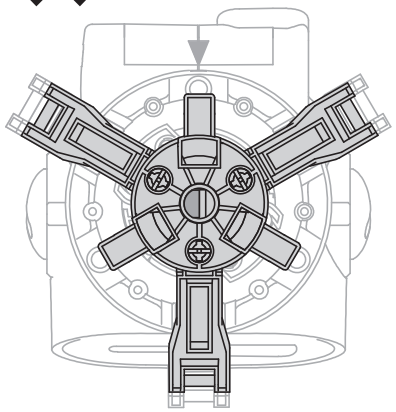

Top View

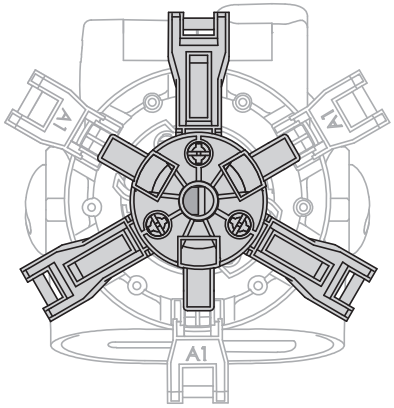

Top View

20

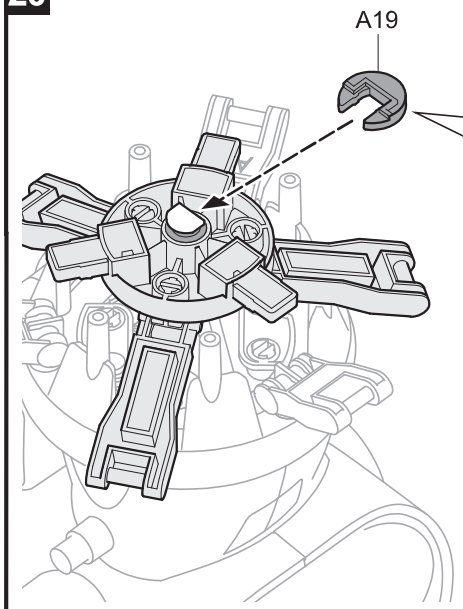

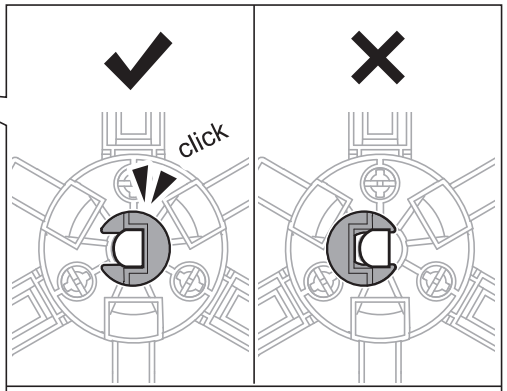

Ensure the right direction of A19.

21

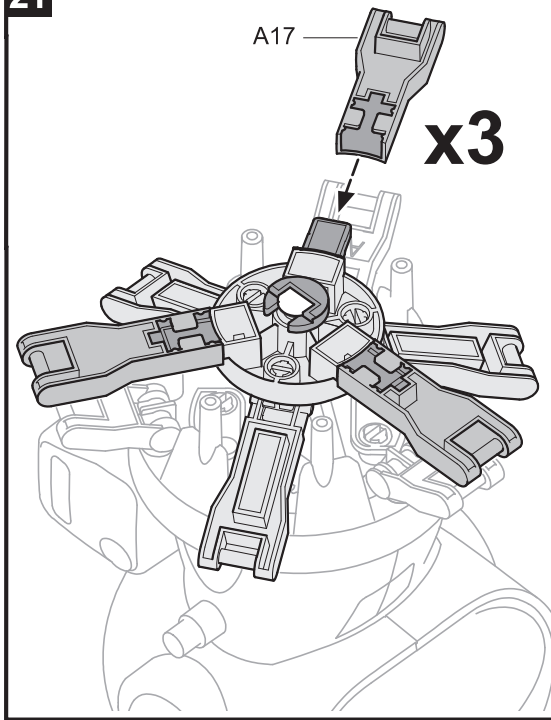

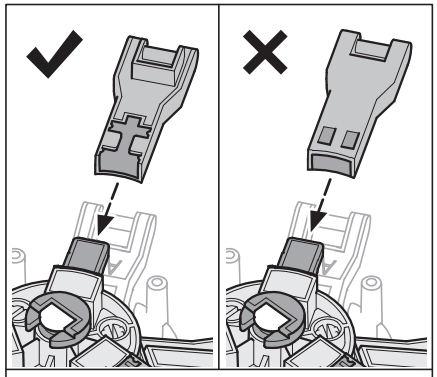

Ensure the right direction of A17.

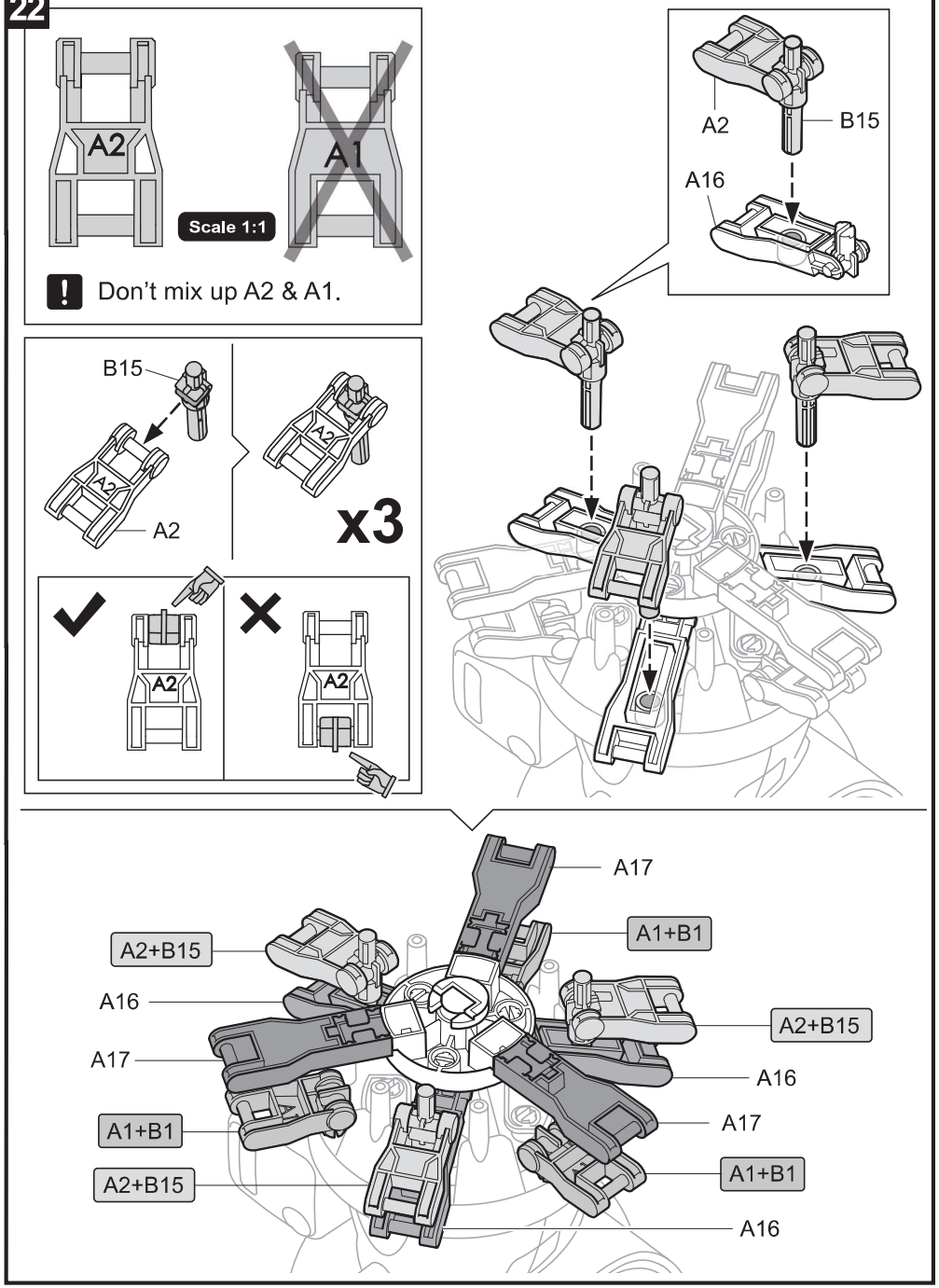
22
A2
A1
Scale 1:1
Don't mix up A2 & A1.
B15
A2
x3
A2
B15
A16
A17
A1+B1
A2+B15
A16
A2+B15
A17
A16
A1+B1
A17
A2+B15
A1+B1
A16

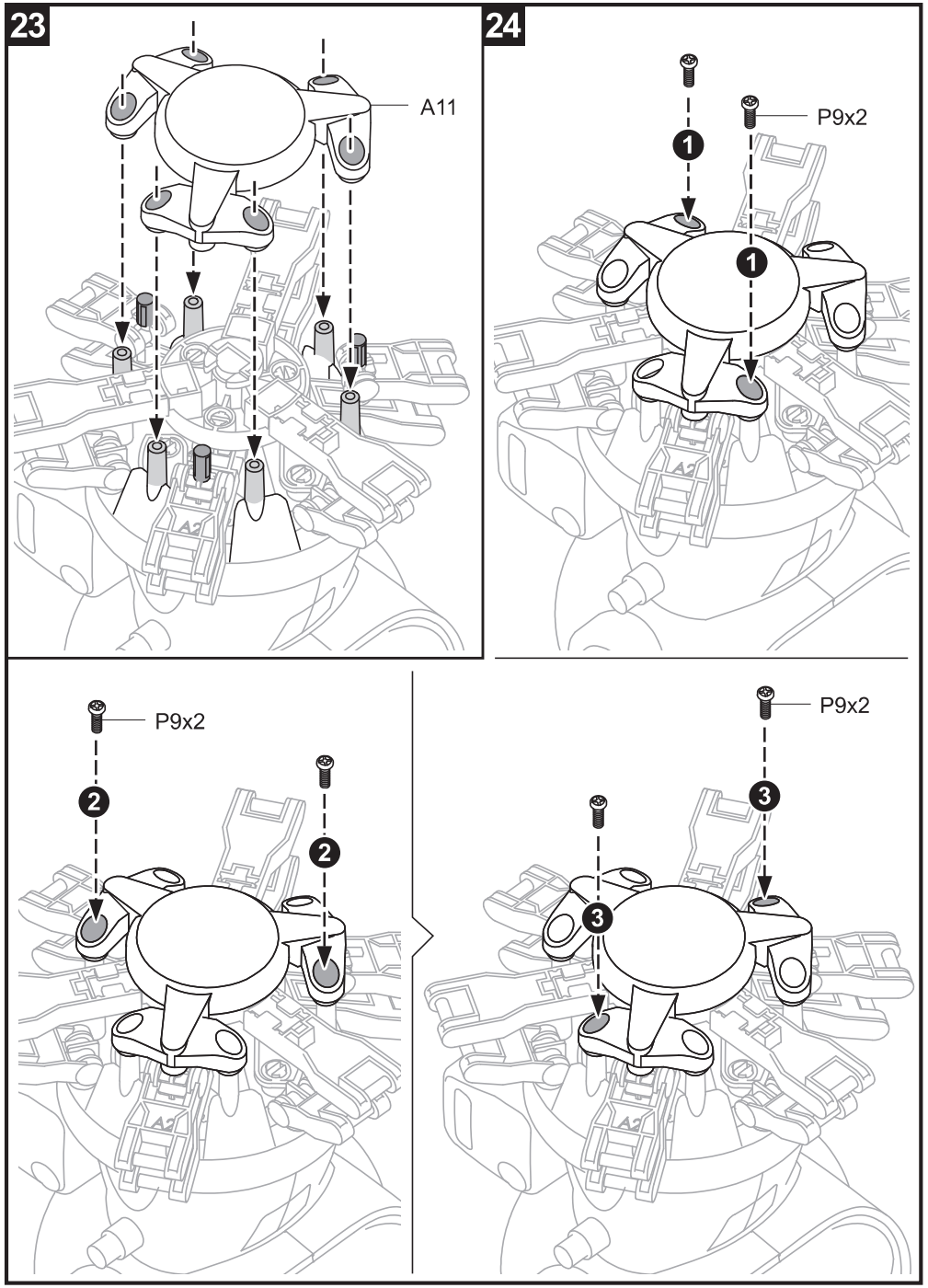
23
A11
24
P9x2
1
1
P9x2
2
2
P9x2
3
3

Feet & Arms Module Assembly

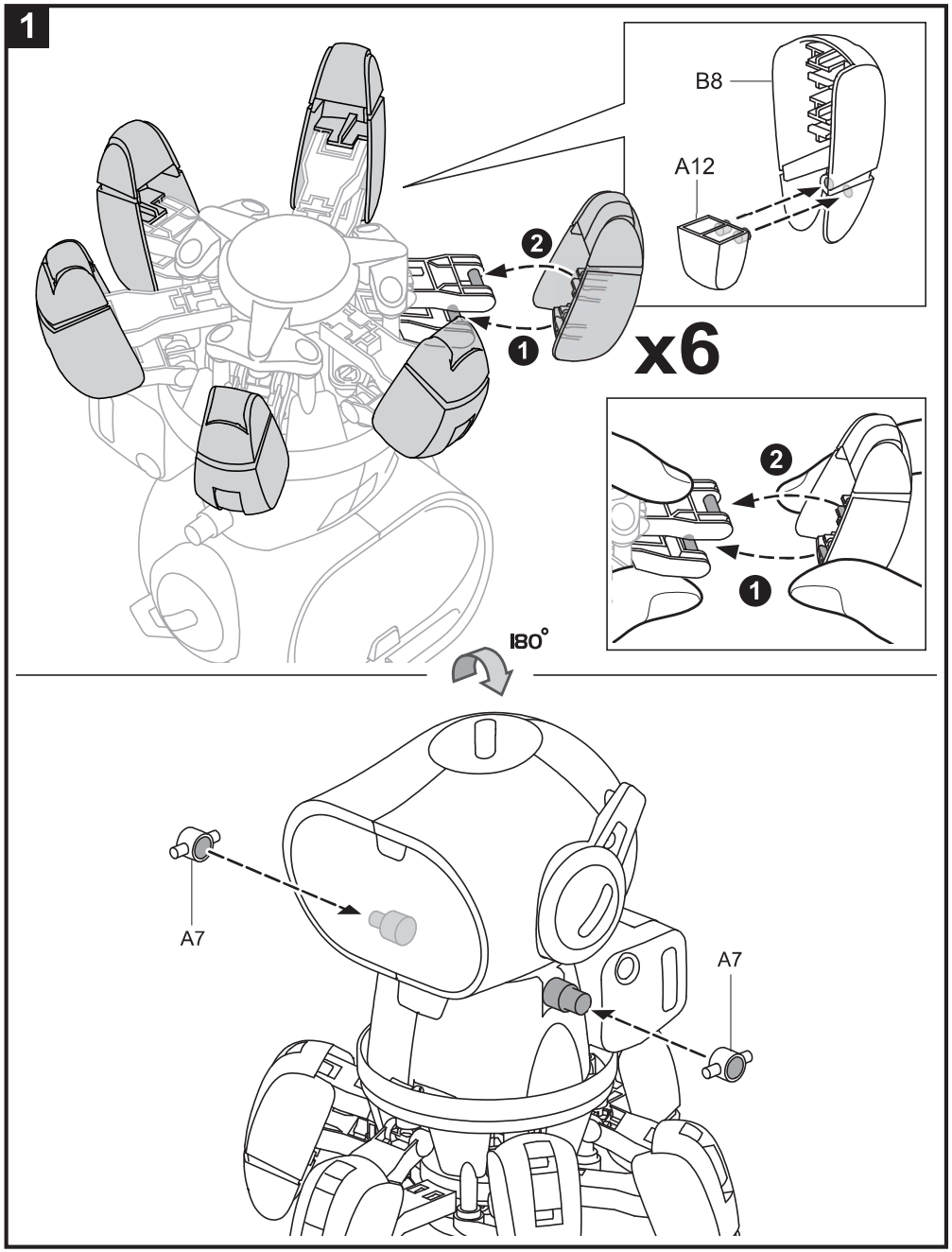

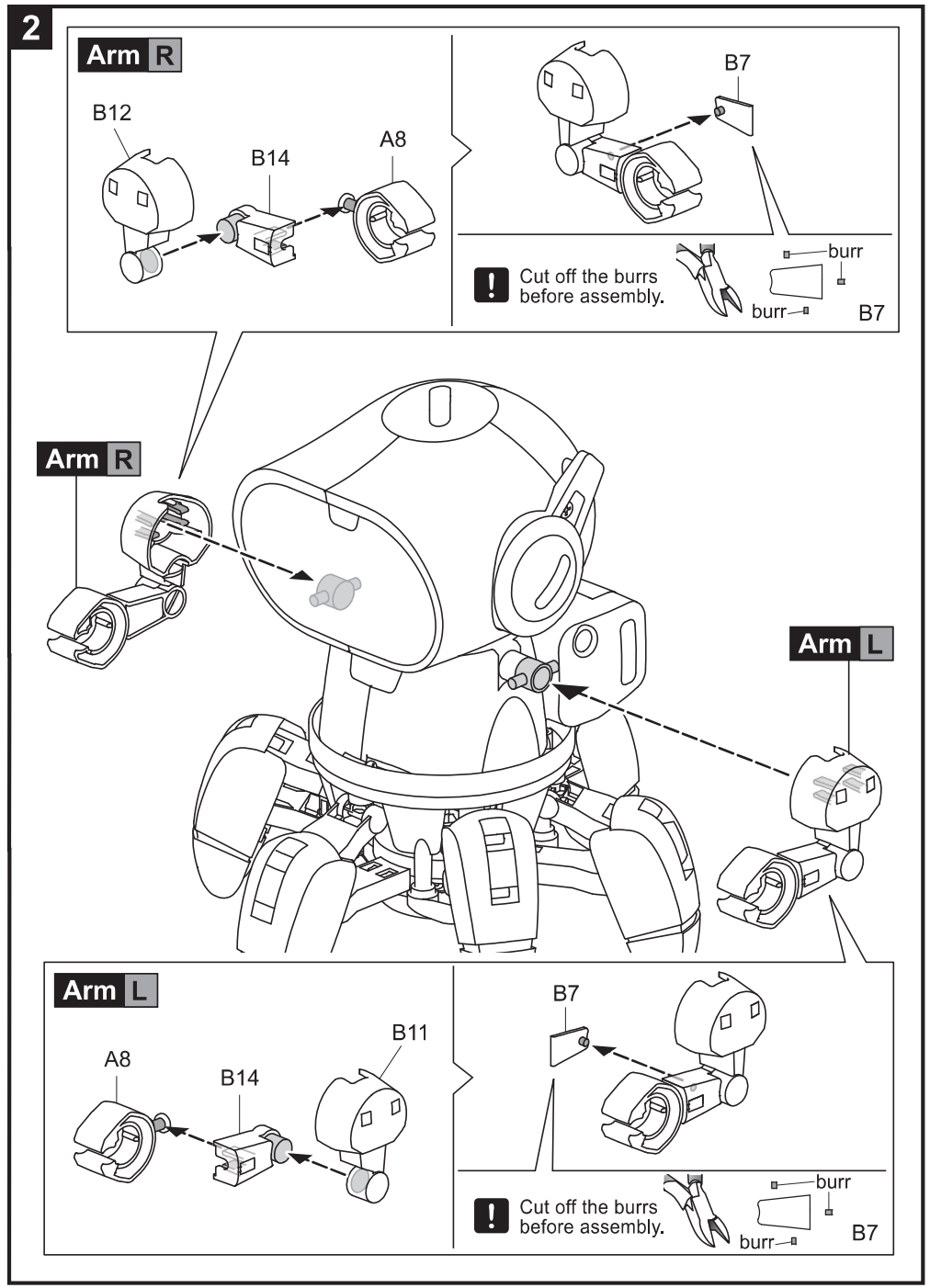

3 Finish

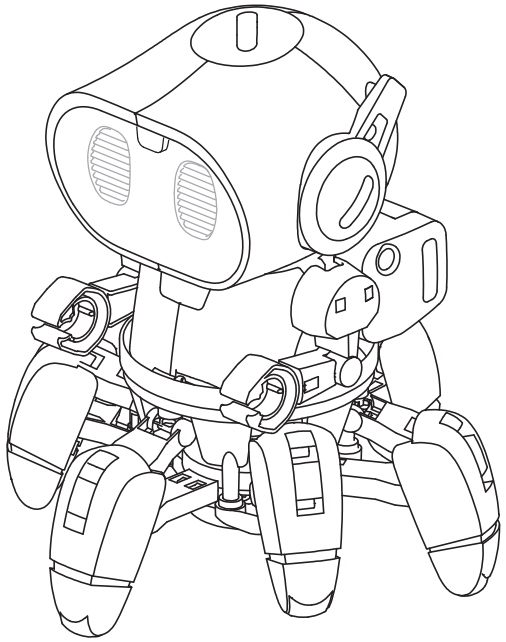

How To Replace Batteries

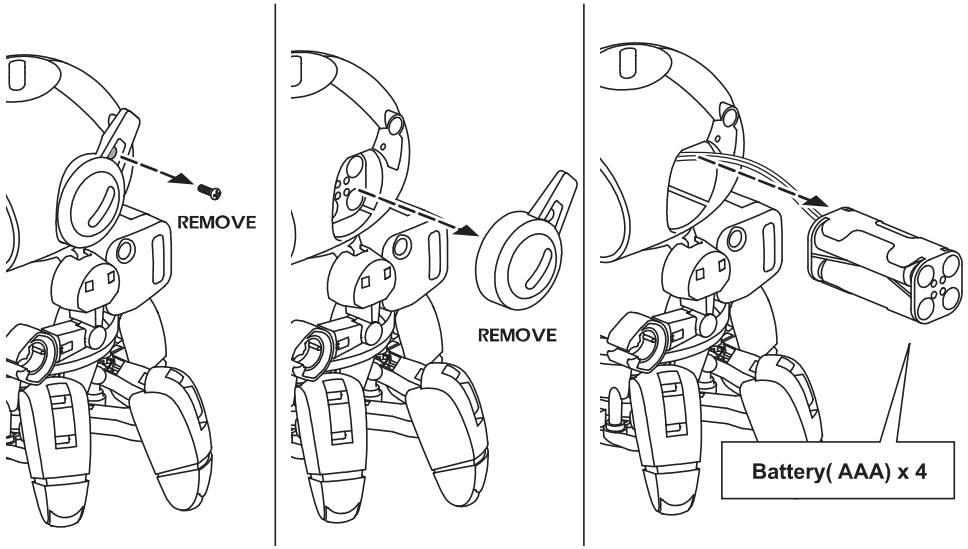

How To Play

1 Power On - " Standby " Phase

1. Long-press the switch for 2 secs. Tobbie's eyes (LED) light up with sound effects
2. LED flashes → enter " Standby " phase → select playing mode.

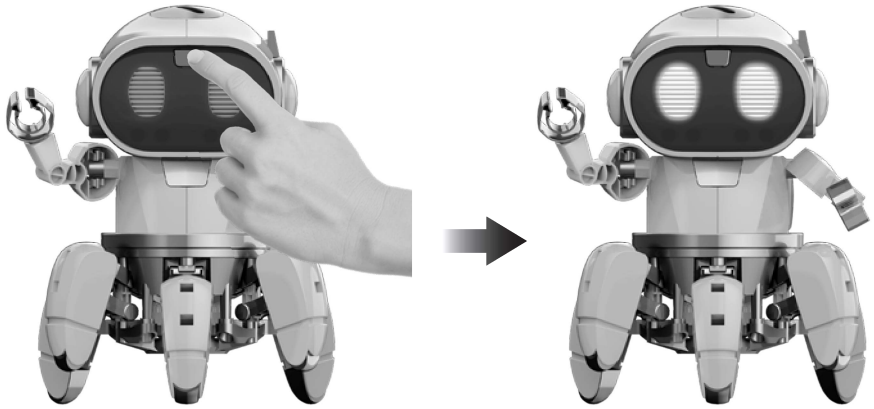

Note: Do not keep Tobbie waiting too long, Tobbie will keep stamping its feet with sound alerts to remind you. If " Standby " phase stays more than 60 secs without mode selection, Tobbie will " power off ".

2 Two Interactive Modes

One single button to switch between modes (Funway 1 / Funway 2) alternatively
Example:
Press the switch once- LED (left) lights up → goes into mode "Funway 1 "
-redo(repress button) - LED (right) lights up → goes into mode "Funway 2"
-redo(repress button) - LED (left) lights up → goes into mode "Funway 1 "

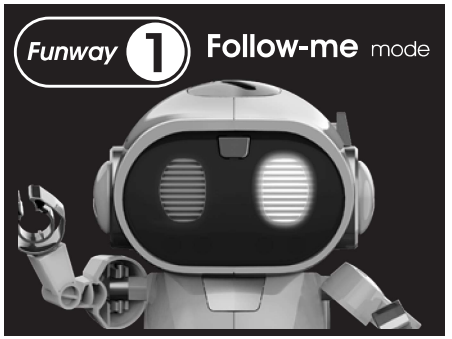



Funway 1

Follow-me mode

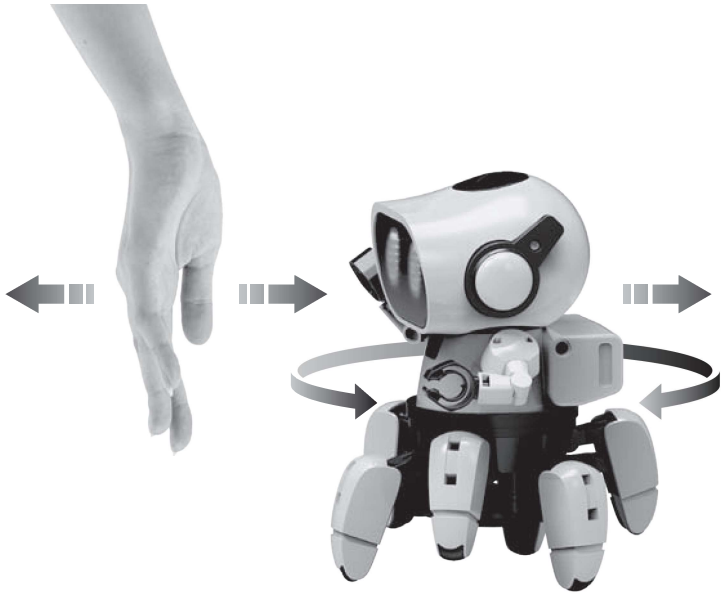

Funway 2

Explore mode

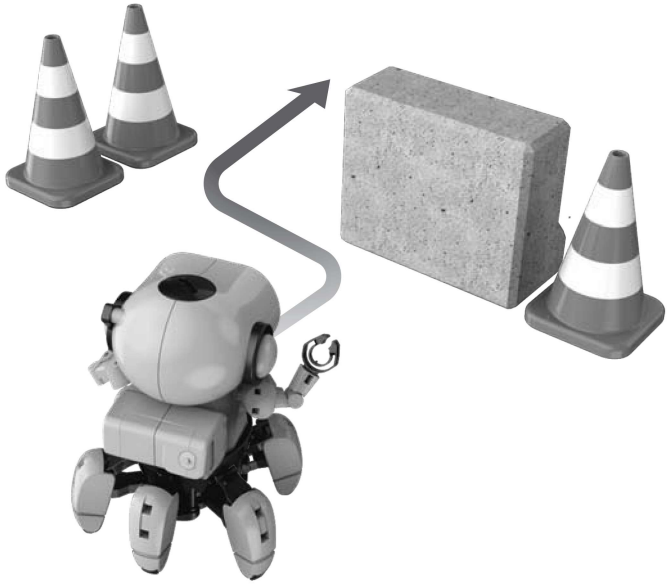

3 Power Off

Long-press the switch for 3 secs.
Tobbie becomes inactive, its LED eyes/Sound effects fade and then power off.
Tobbie goes into " power off " mode.

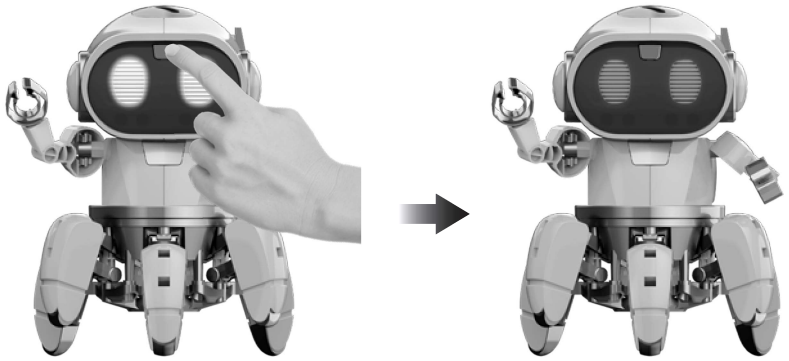

Warning

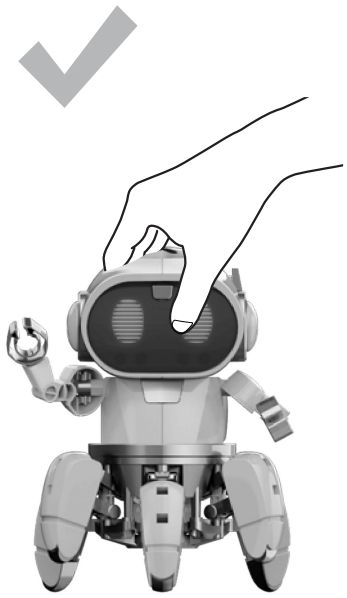

Be gentle when holding Tobbie by its head, any improper motions (as shown to the right) might cause malfuction.

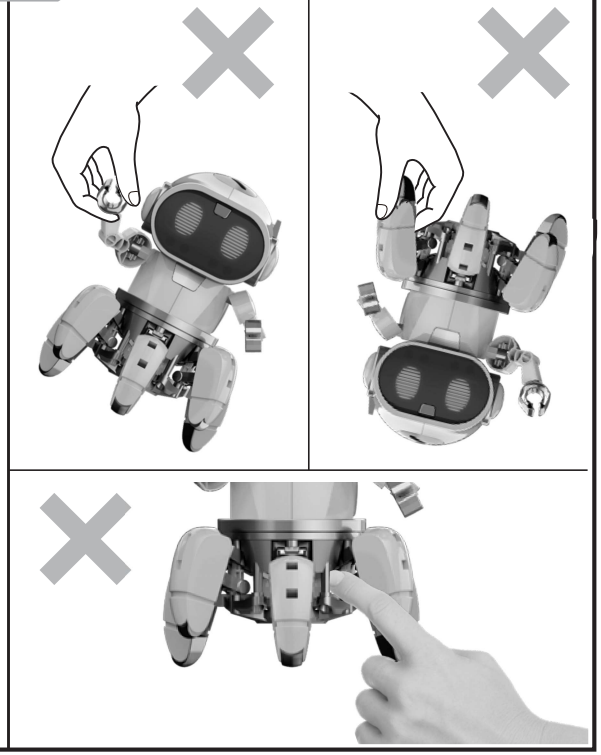

Trouble Shooting

1. Ensure batteries are placed in correct polarity. (refer to page 13, step **7**)

2. If Tobbie does not work (LED doesn't flash) when pressing " power switch ", Check and ensure the screws are fastened to the bottom entirely (refer to page 11, step **3**)

3. Ensure all wirings are correct (refer to page 12, step **5** wire configuration as below)

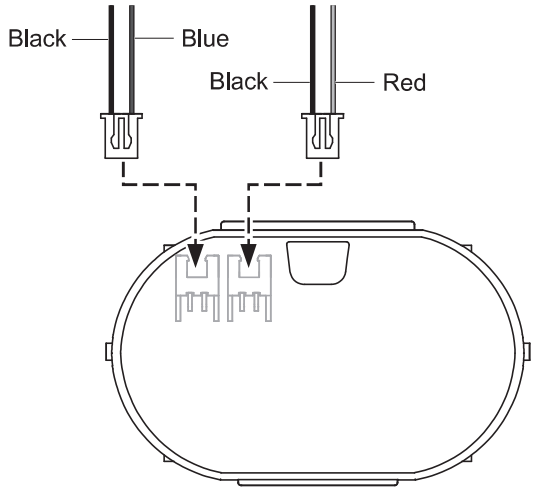

4. Do not play the Tobbie under direct sunlight or halogen lamp, it may cause the robot to go wrong direction.

5. If Tobbie emitted a sound " Bee Bee Bee " while playing, it is on " low-battery " alert. Replace new battery once it is exhausted.

6. Under " Explore " mode, if gearbox is still working but Tobbie does not move and come with abnormal sound " Da Da Da ".
   - ① Refer to page 21, step **20** , check and ensure **A19** is Installed correctly.
   - ② Refer to page 6, step **8** , check and ensure **A15** is removed.
   - ③ Refer to page 6, step **7** and page 11, step **3** , check and ensure all screws are fastened tightly.

7. If Tobbie is walking unstably or tumbling, check if **A1**(refer to page 18, step **16**) & **A2** (refer to page 22, step **22**) are not mixed, ensure both parts are installed correctly.

Tobbie The Robot

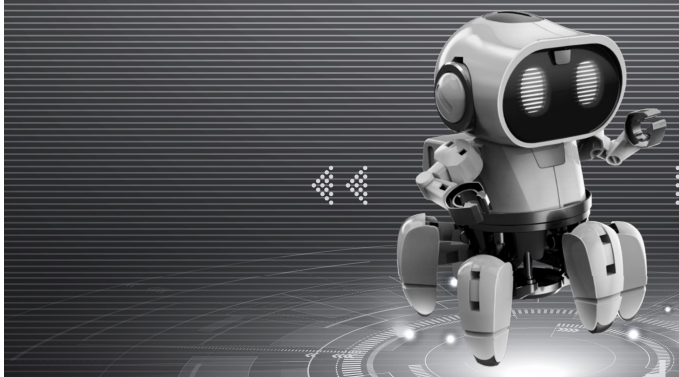

- Removal and replacement of batteries should be carried out by adult or under adult supervision.
- Avoid short circuiting the contacts in the battery compartment or the battery terminals.
- Remove exhausted batteries from the product to avoid leakage.
- Do not mix used batteries and new batteries or batteries of different types.
- Do not mix alkaline, standard (carbon-zinc) , or rechargeable (nickel-cadmium) batteries.
- Batteries are to be inserted with the correct polarity.
- Do not attempt to recharge non-rechargeable batteries.
- Rechargeable batteries are only to be charged under adult supervision.
- Rechargeable batteries are to be removed from the toy before being charged.

CE

⚠ **WARNING :**
CHOKING HAZARD
Small parts
Not for children under 3 years

0-3

Copyright © 2018 CIC. All rights reserved

4350008931