Assembly Instructions

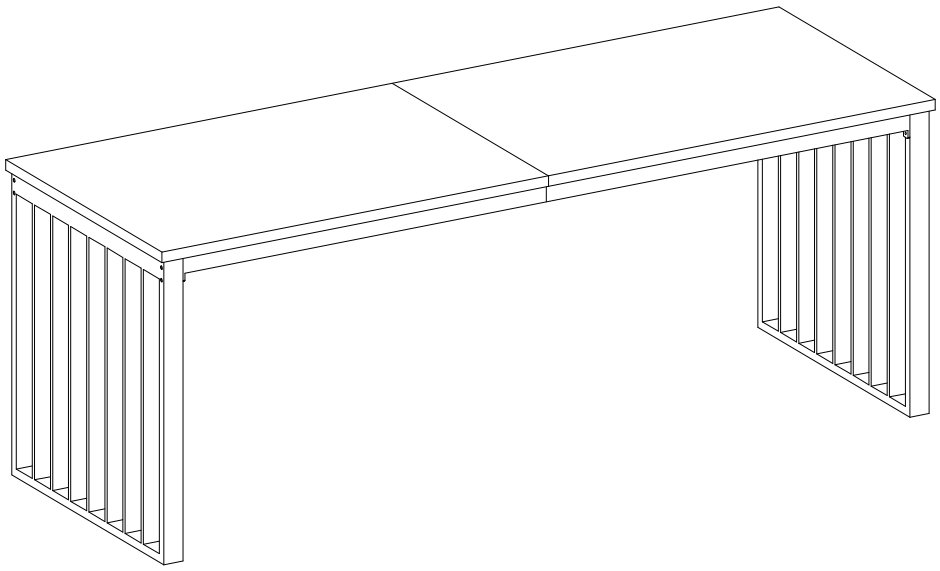

Two-Person Desk	Model No. **HOGA-YS0183/YS0337** **HOGA-YS0262/YS0270** **HOGA-YS0321/YS0320** **HOGA-YS0366/J0455**

Contact Us

We're here to help you.



Your satisfaction is our top priority. If you encounter any issues with this product, such as missing or damaged parts, we're here to help. Please retain the original packaging and take photos of the packaging and the product, then contact us as soon as possible.

Warm Tips

1. Carefully read these instructions and keep them for future reference.
2. Check the parts list and confirm everything's there before starting assembly.
3. When assembling, put all parts on a soft, smooth surface like a carpet to avoid scratches.
4. Don't fully tighten screws until all parts are confirmed in place to avoid misalignment.

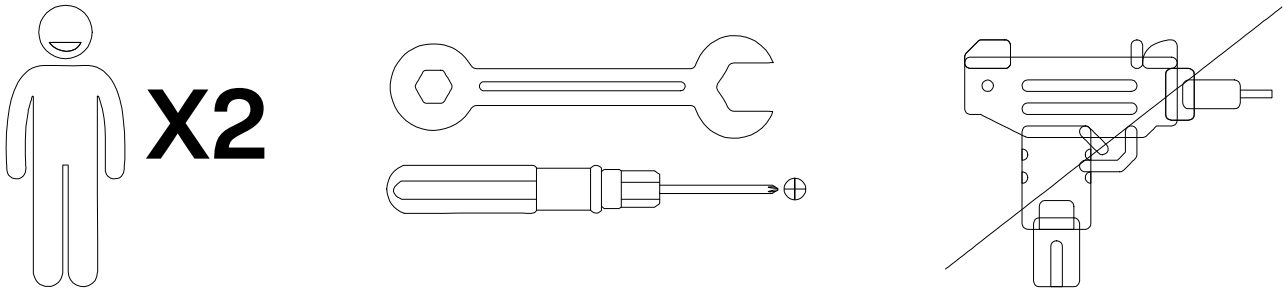

We recommend using hand tools for assembly.
If an electric screwdriver is used, reduce power and torque to avoid damage to the product.

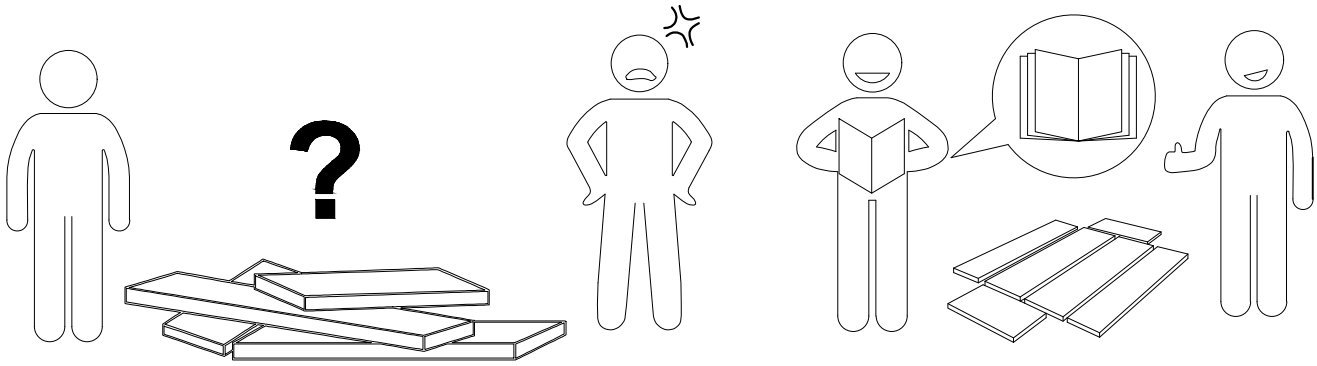

AVOID SCRATCHES

In order to avoid scratching, this furniture should be assembled on a soft surface, such as a rug.

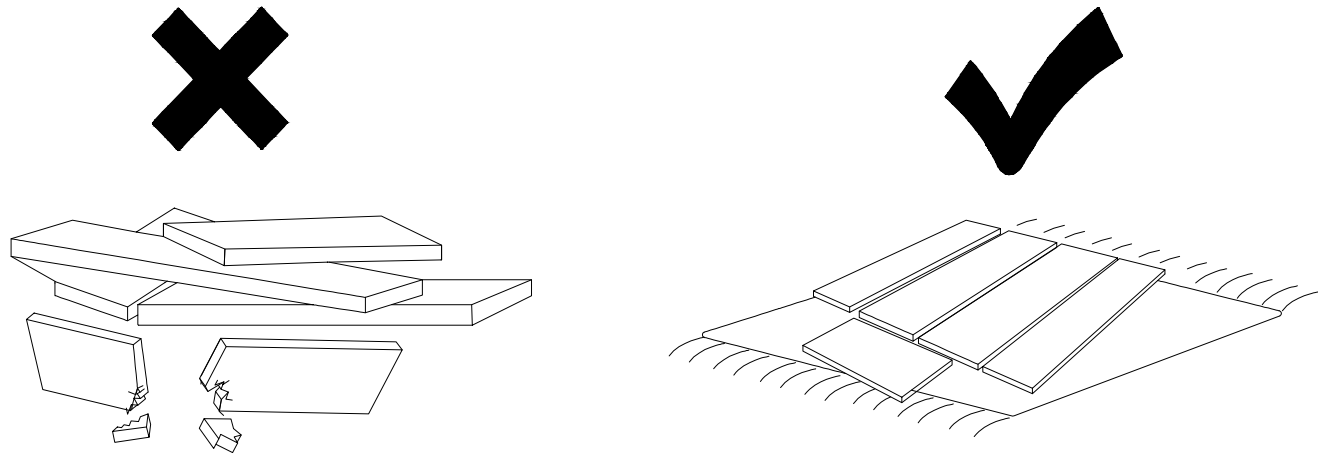

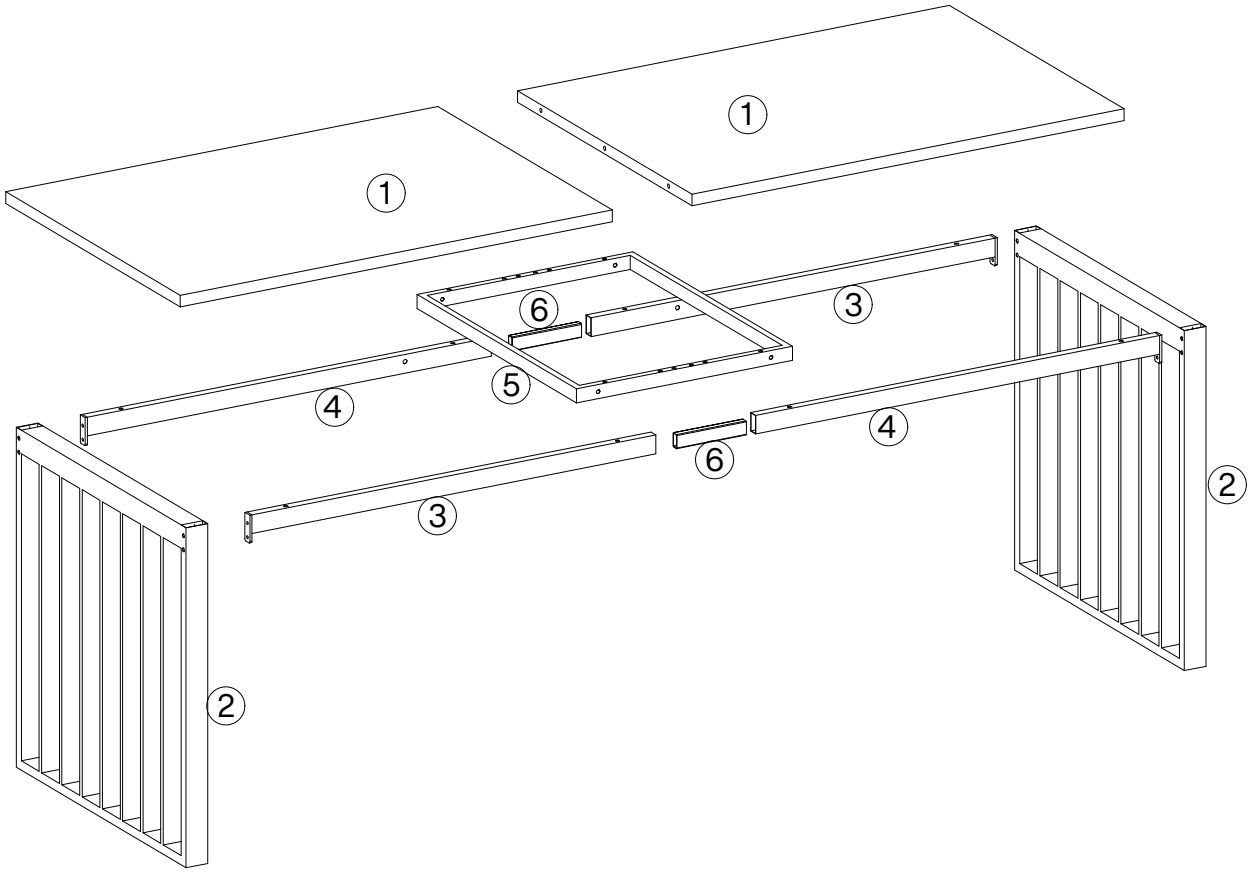

⚠ Caution

Make sure all parts are included. Most board parts are labeled or stamped on the raw edge.
Contact us for a free replacement if you encounter any damaged or missing parts.

Parts List

❶ 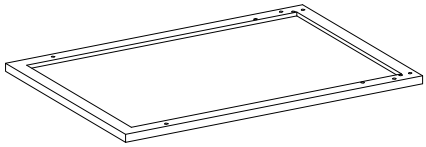 2pcs	❷ 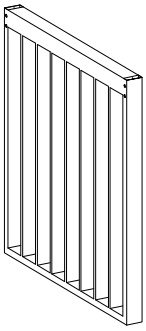 2pcs	❸ 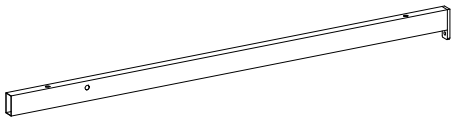 2pcs
❹ 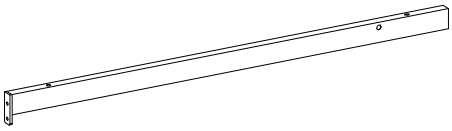 2pcs	❺ 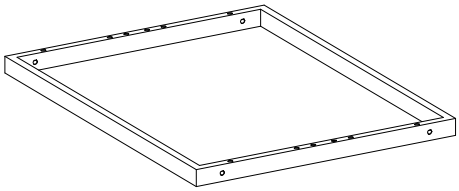 1pc	❻ 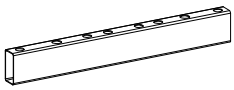 2pcs

Hardware List

A	B	C	D	E
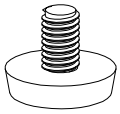 M8	 M6×12mm	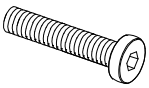 M6×60mm	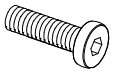 M6×25mm	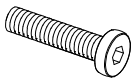 M6×50mm
4pcs	12pcs	8pcs	4pcs	8pcs

F	G	H	I	
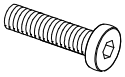 M6×40mm	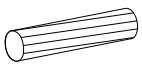 Ø8×30mm	 M6	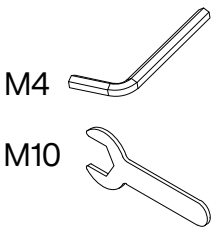 M4 M10	
12pcs	3pcs	4pcs	1pc	

1

A

M8
4PCS

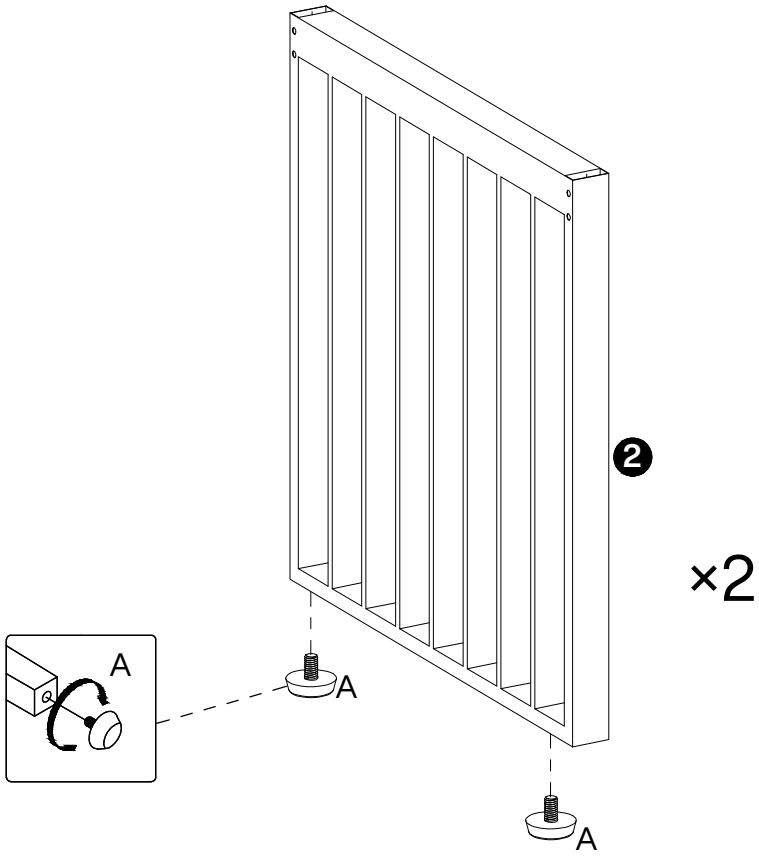

2

×2

B

M6×12mm
12PCS

3

H	C
M6	M6×60mm
4PCS	8PCS

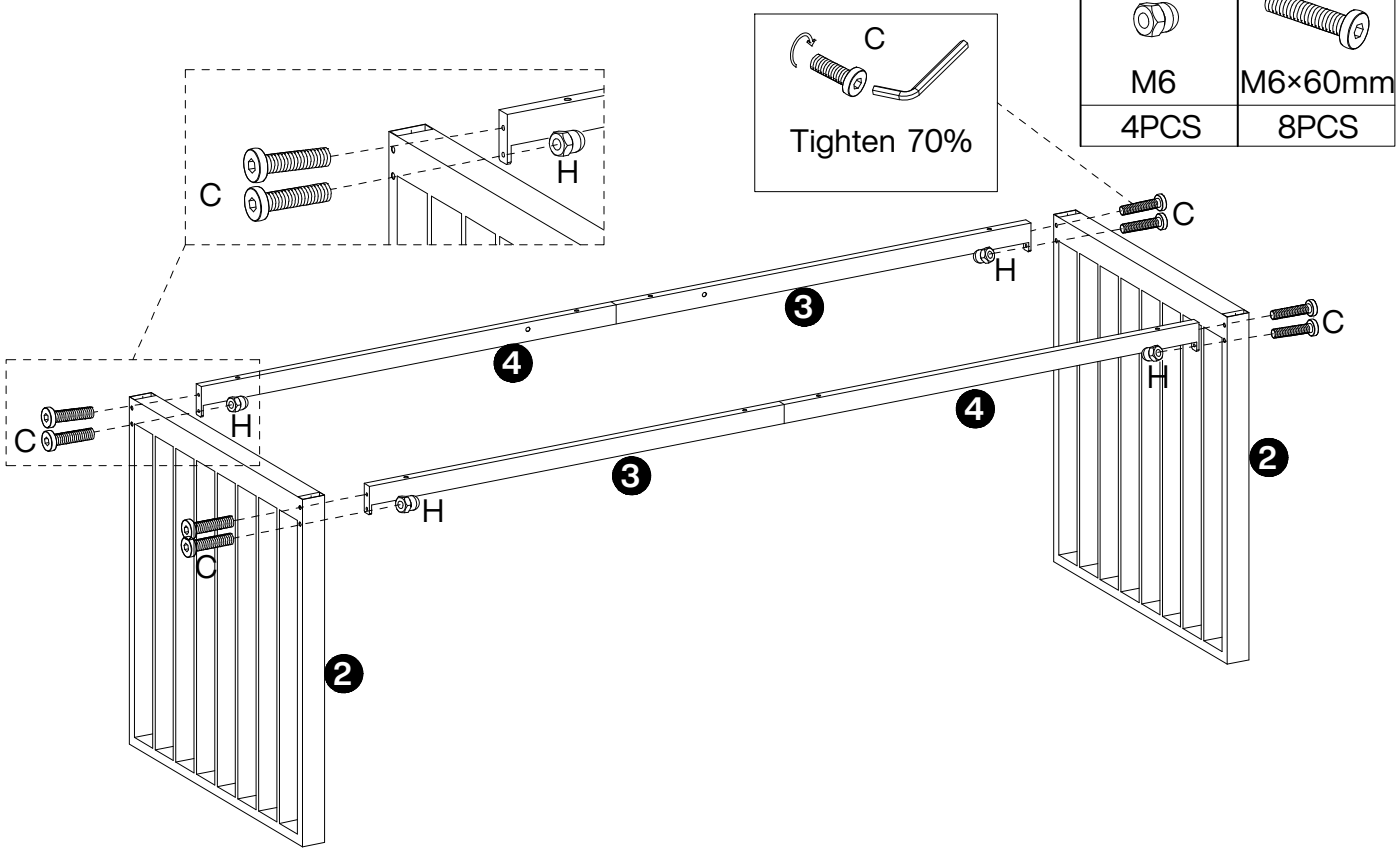

4

D
M6×25mm
4PCS

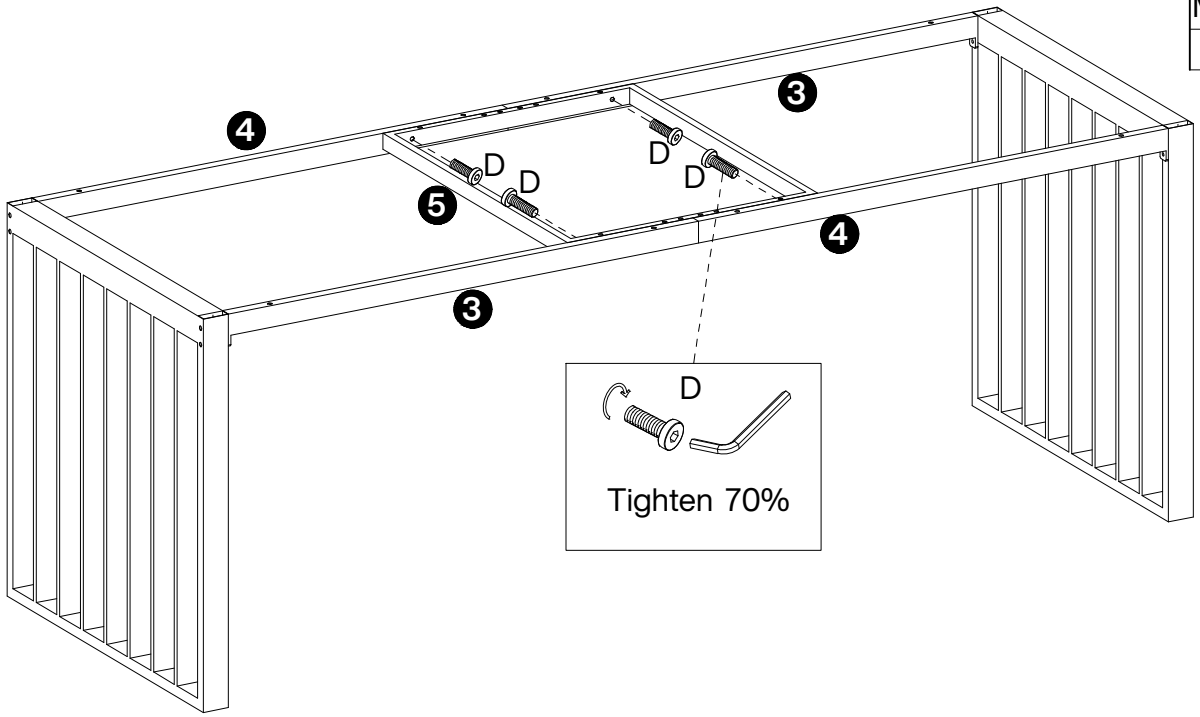

5

G

Ø8×30mm
3PCS

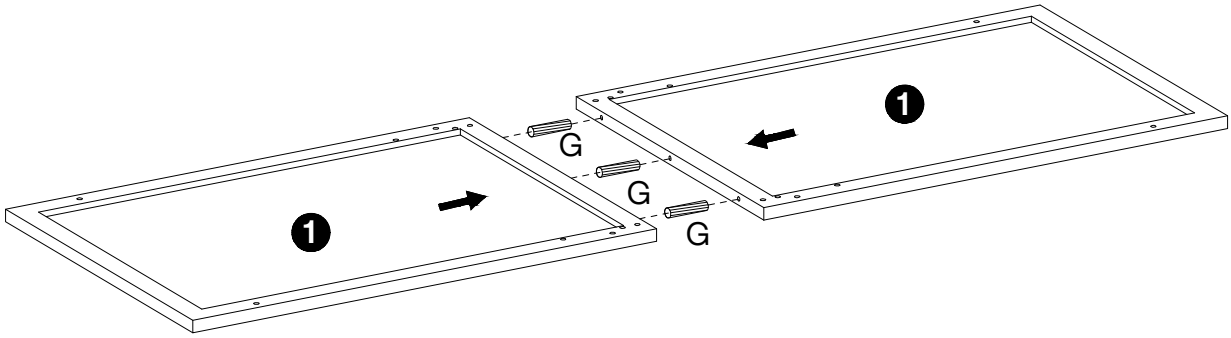

6

E
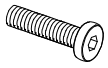
M6×50mm
8PCS

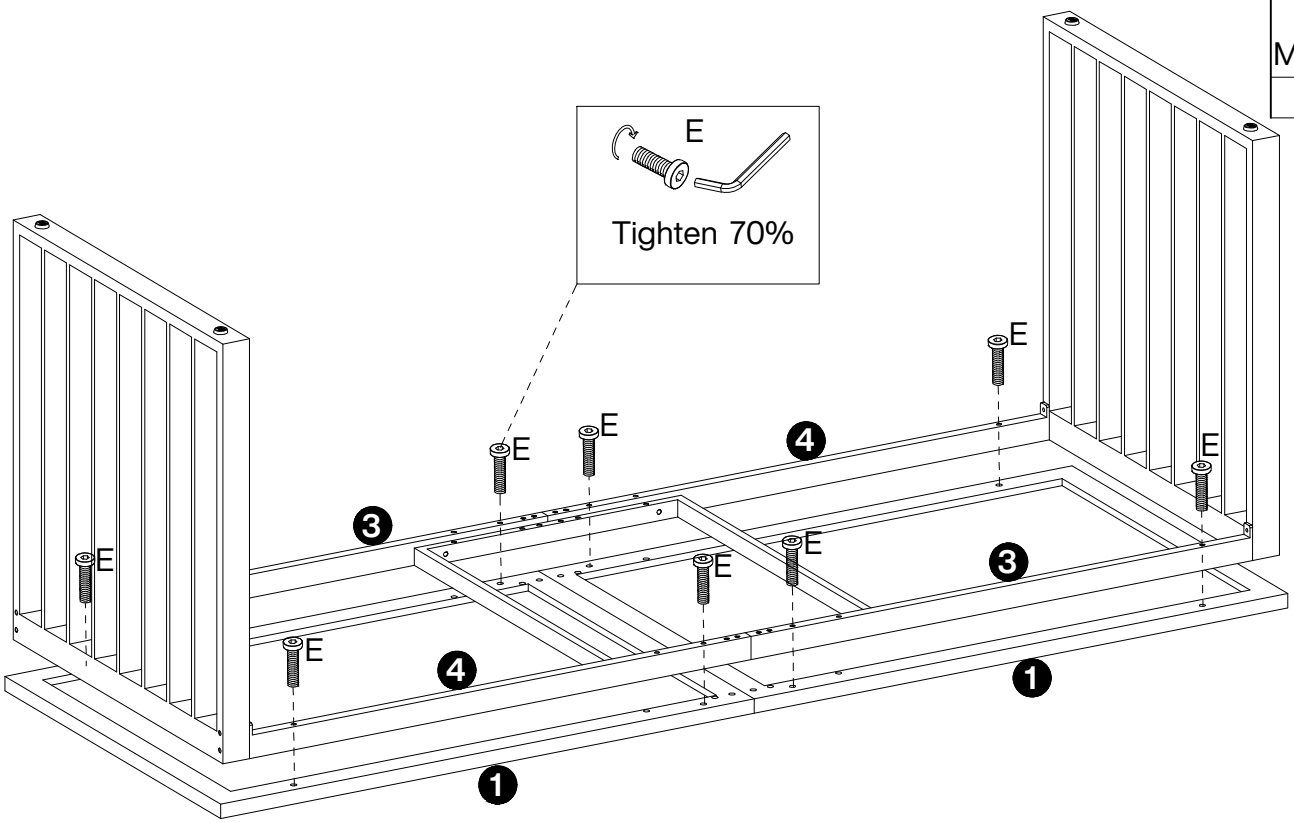

7

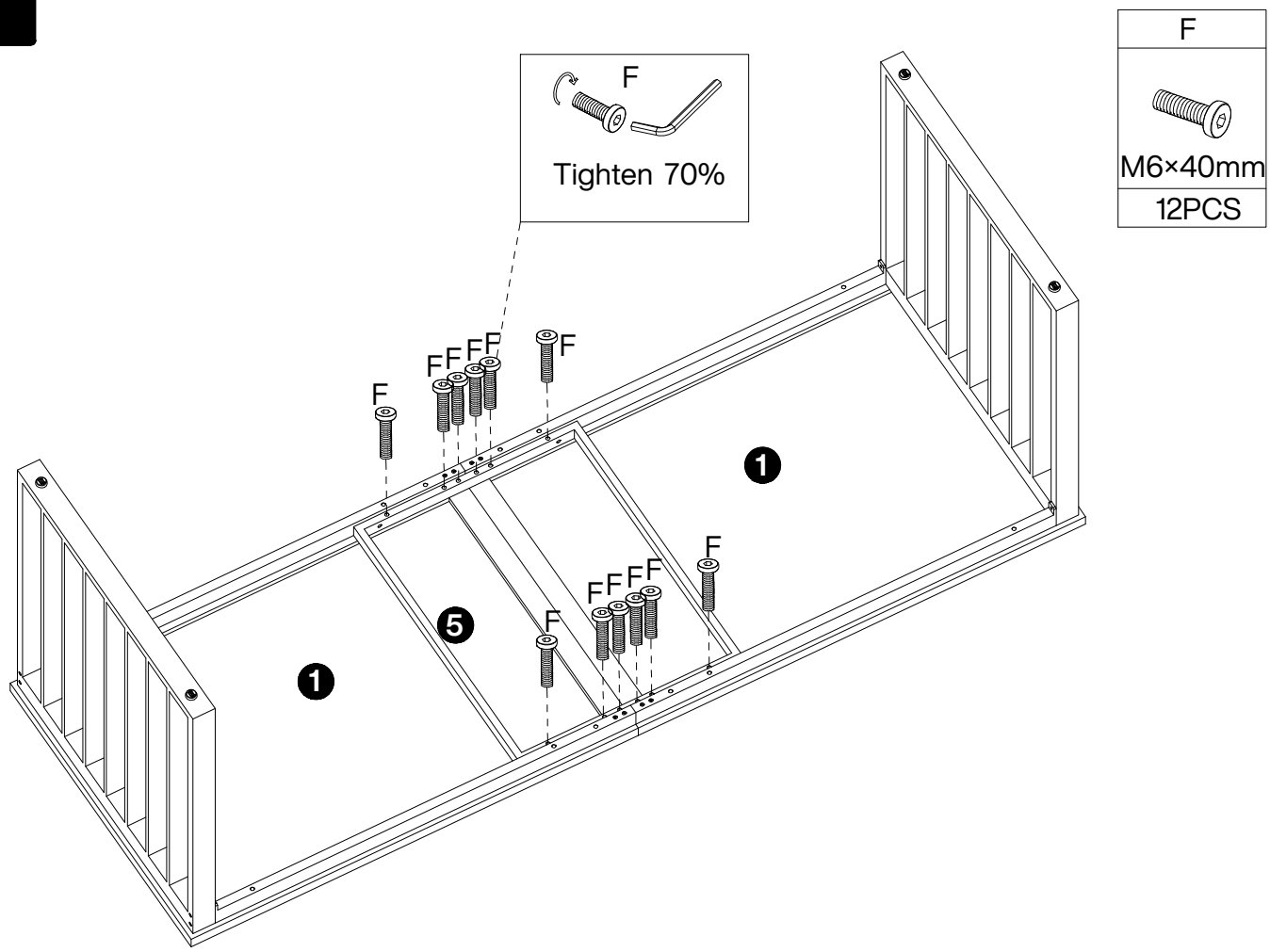
F
Tighten 70%
F
M6×40mm
12PCS
F
F
F
F
F
F
1
5
1
F
F
F
F
F

8

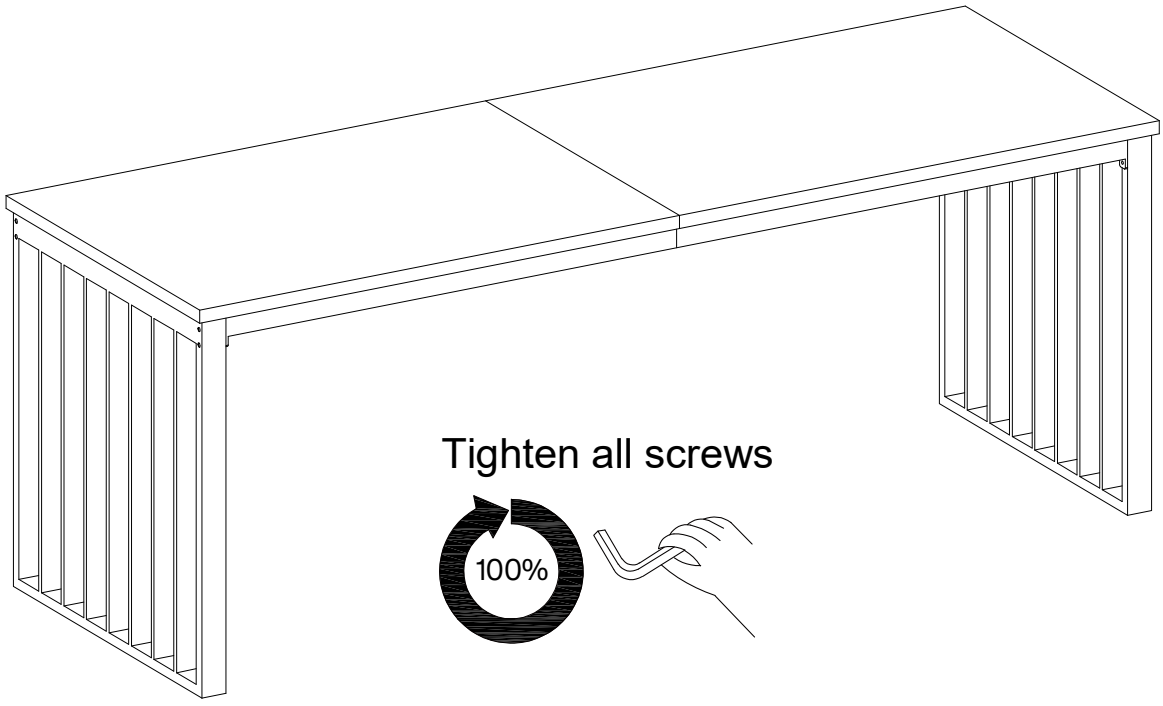
Tighten all screws
100%

Thank you for your support!

