KLARSTEIN

CHAL-TEC GmbH

Wallstraße 16,
10179 Berlin, Germany
WEEE-Nr.: DE 46906833

For Great Britain: Importer:
Chal-Tec UK limited

Unit 6 Riverside business Centre,
Brighton Road,
Shoreham-by-Sea,
BN43 6RE, United Kingdom

1003287127423050039

Item-Nr.: 10032871
Description: Refrigerator

Specifications:
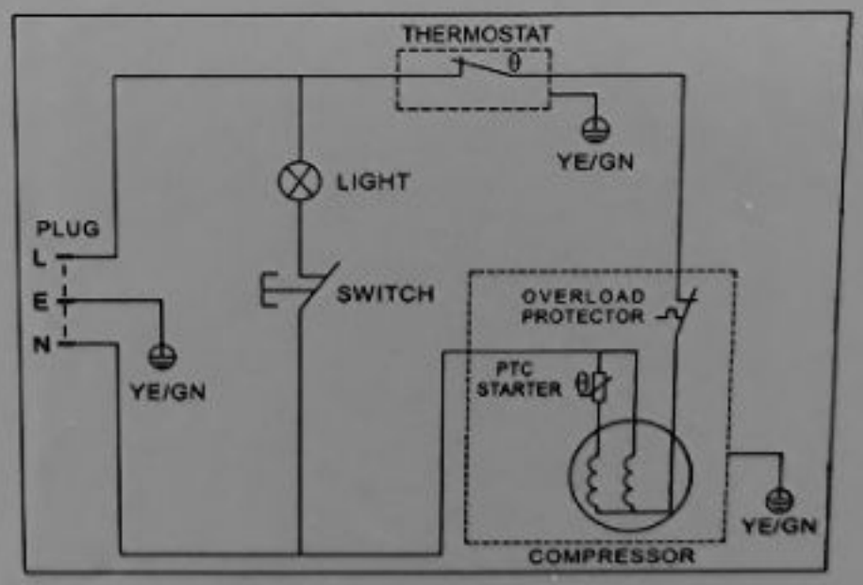
Voltage/ Frequency: 220-240V~ 50Hz
Current: 0.6A
Lamp Power: 1W
Climate Class: N
Storage Volume: 60L
Refrigerant (Weight): R600a(20g)
Foaming Gas: Cyclopentane