INSTRUCTIONS OF SMART CAT LITTER BOX

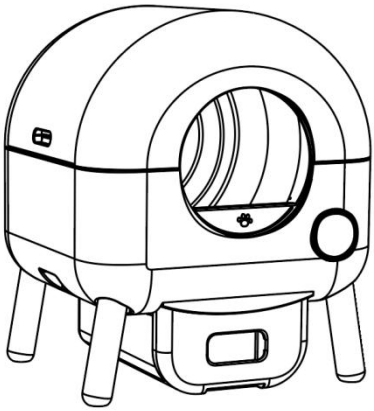

Please read the instruction manual carefully and keep it safe before using the product

Statement

- Dear user, thank you for choosing our smart cat litter box.
- Before using the product, please read this instruction manual carefully.
- The company assumes no responsibility for any damage, personal injury, or property loss caused by improper use.
- To ensure the best experience with our product, it will continuously undergo upgrades and iterations. The specific appearance and materials are subject to the actual product, and the images and text are for reference only.
- Documents, accessories, and consumables related to this product may vary with product upgrades and optimizations, but this will not affect usage. The actual product will prevail. Updates will not be separately notified.

Safety Instructions (Important)

- Please carefully follow the instructions for operation.
- Do not soak or wash the base in water.
- Do not rinse the electrical parts.
- Turn off the power before cleaning and disassembling.
- Use indoors only.
- Not recommended for pets under three months old.
- Use the original power cord and adapter to avoid damage and safety hazards.
- Guide pets correctly to use, and ensure they do not bite the cords.
- Place the product on a stable and flat surface.
- Do not place in high areas to avoid falling risks.
- The smart cat litter box is only suitable for cats weighing 1KG or more, with a recommended maximum weight of 15KG.

1.Product Introduction

This is a fully automatic smart cat litter box that can clean cat litter automatically after your cat uses it. You can download the “Tuya Smart” APP to set the device to automatic or manual mode. You can also view the cat’s bathroom usage records, device status, current mode, and device notifications. If you do not wish to connect to the APP, you can perform basic settings through the device’s interface. The device has multiple safety features during operation, such as anti-pinch and automatic stop when the cat enters during operation. It automatically stops and protects in case of anomalies to ensure no harm to you and your pet.

Product Model	CATBOX-NEO-A
Operating Modes	Automatic/Manual
Applicable to	Cats
Material	ABS+PP+POM
Size	550* 500*665 mm
Product Net Weight	11 kg
Power Supply	DC 12V/2A
Wi-Fi Support	Frequency Range 2.400~2.4835GHz Wi-Fi Standard: IEEE 802.11b/g/n (Channels 1-14)
Rated Power	10W
Operating Temperature	0 to +50℃
Storage Temperature	-10 to +60℃

2.List of Accessories

Please carefully check if all accessories are included. The following are standard accessories provided by the factory; for complimentary accessories, please refer to the dealer.

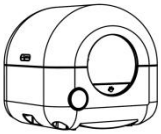

Main Unit *1

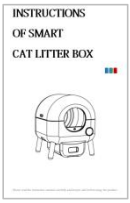

Instruction Manual *1



Power Adapter



Waste Collection Bin *1



Support Legs *4



Garbage Bag *1

3. Component Introduction

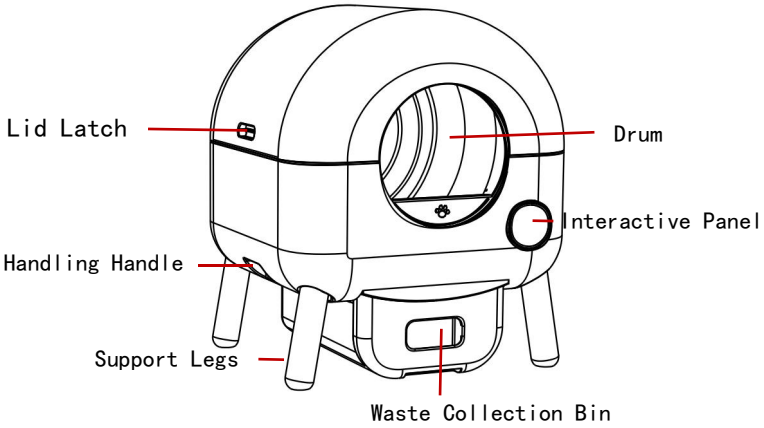

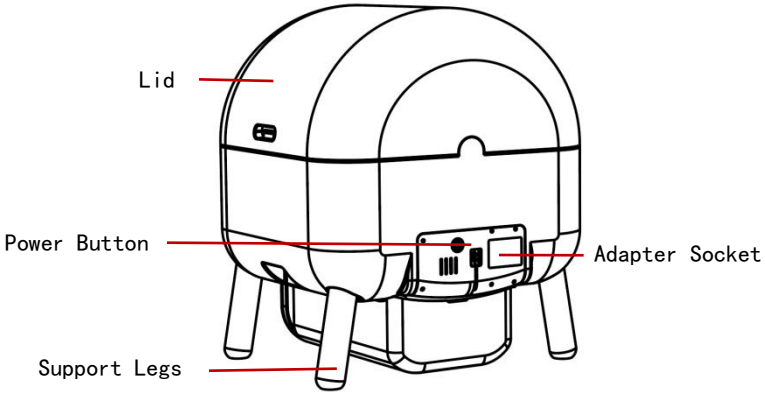

4. Quick Connection

You can quickly connect and use this product by following the instructions on this page.

①First, you need to download the "Tuya Smart" APP. You can search for "Tuya Smart" in your phone's app store, or scan the QR code on the right to download and install.

②After installation, open the APP, register an account and log in, click on "Add Device" on the homepage, and follow the instructions to complete the binding process.

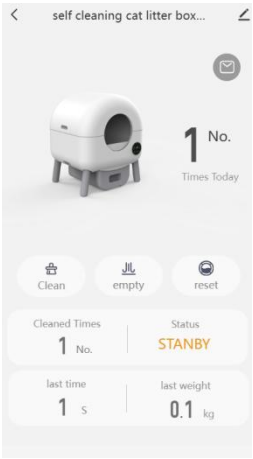

③Once the device is bound, pour cat litter into the drum compartment of the device (up to 6L maximum), and then reboot the device (unplug the power for 15 seconds and then reconnect).

④After completing the above steps, you can enter the device control page through the bound device on the APP homepage.

Now, you are ready to using the smart cat litter box in fully automatic mode.

5. Operation Introduction

5.1 User Instructions

5.1.1 Unboxing and Assembly

Open the package and take out the drum's internal drawer, four support legs, trash bags, and the adapter; install the support legs into the fixing holes at the bottom half of the device, they should attach with a magnetic structure; install the drawer into the slot at the bottom of the machine to complete the assembly. If the drawer is not properly installed, the device's fault light will remain on.

5.1.2 Adding Cat Litter

Cat litter can be added through the entrance of the drum, or by removing the top cover and pouring it in from the top.

5.1.3 Cleaning the Waste Collection Chamber

Pull out the waste collection chamber, remove the trash bag inside, seal it, and dispose of it promptly. Then, insert a new trash bag to complete the cleaning of the waste collection chamber.

5.2 Safety Mechanism

The smart cat litter box has an automatic protection feature to ensure the safety of cats. Protection triggers in different working states are as follows:

Working State	Drum Gravity	Infrared at Entrance	Infrared in Waste Chamber	Anti-Pinch
Cleaning	Supported	Supported	Supported	Supported
Emptying	Not Supported	Supported	Not Supported	Supported
Reset	Supported	Supported	Supported	Supported

5.3 Disassembling and Cleaning Accessories

The drum chamber and storage chamber drawer of the smart cat litter box can be disassembled and cleaned. Before disassembling the accessories, please power off the device and clean out any debris in the accessories. After cleaning,

dry the parts thoroughly before reassembling them into the device.

Remove the top cover by pressing the latches on both sides of the machine, then take out the drum and the waste collection chamber at the bottom for cleaning.

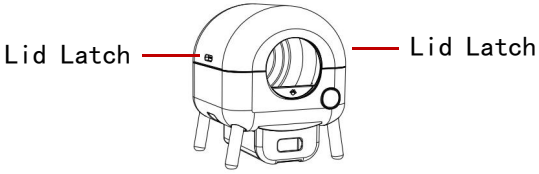

6. Troubleshooting

Fault Symptoms	**Troubleshooting**
No response when powered on	Check if the power plug is properly connected
Unable to configure the network successfully	Check if the bound WiFi name and password match If the device does not support 5G WiFi, Please ensure the bound WiFi is on the 2.4G band
The cat litter box does not clean automatically	After adding cat litter, reset the device once, or turn it off and restart
The cat litter box does not return to its position automatically	Perform a reset on the device
Abnormal triggering of anti-pinch during operation	Lower the drum and check if the matrix infrared surface above the waste collection chamber is obstructed
Constant fault light	Check if the drawer is properly installed, whether the drum has reset; if not, reset the device once

After-Sales Service Card

Customer Name: _____

Contact Number: _____

Address: _____

Product Model: _____

Type of After-Sales Service:

Repair☐ Replacement☐ Return☐

Problem Description:

Date (Year/ Month/ Day)

