a
Limited Warranty

evolis
& drivers, software documentations

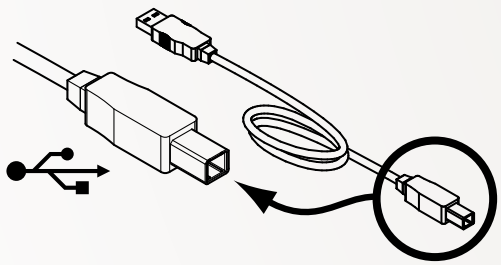

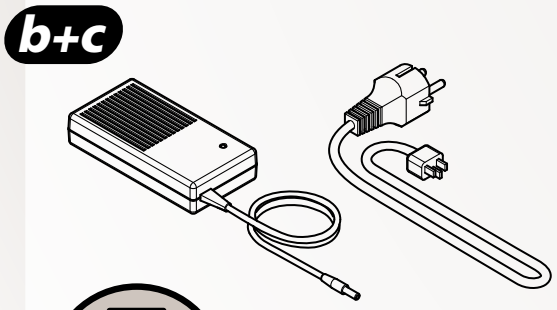
b+c

d
Insert this way
Remove the protective layer before using

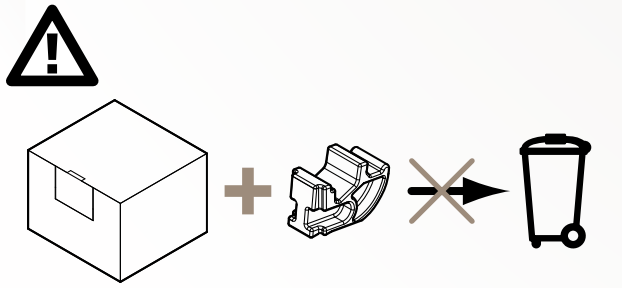

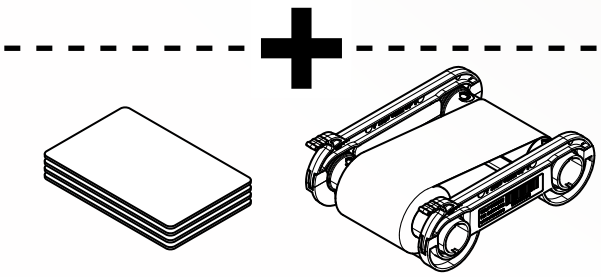

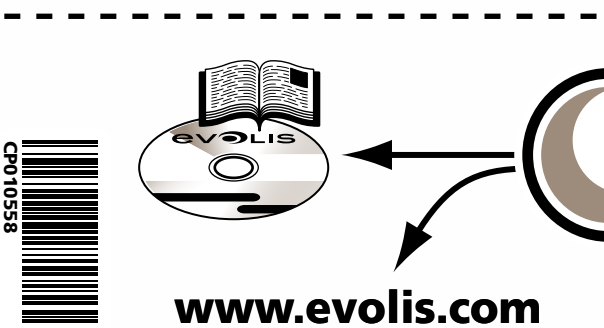
evolis
?
CP010558
www.evolis.com

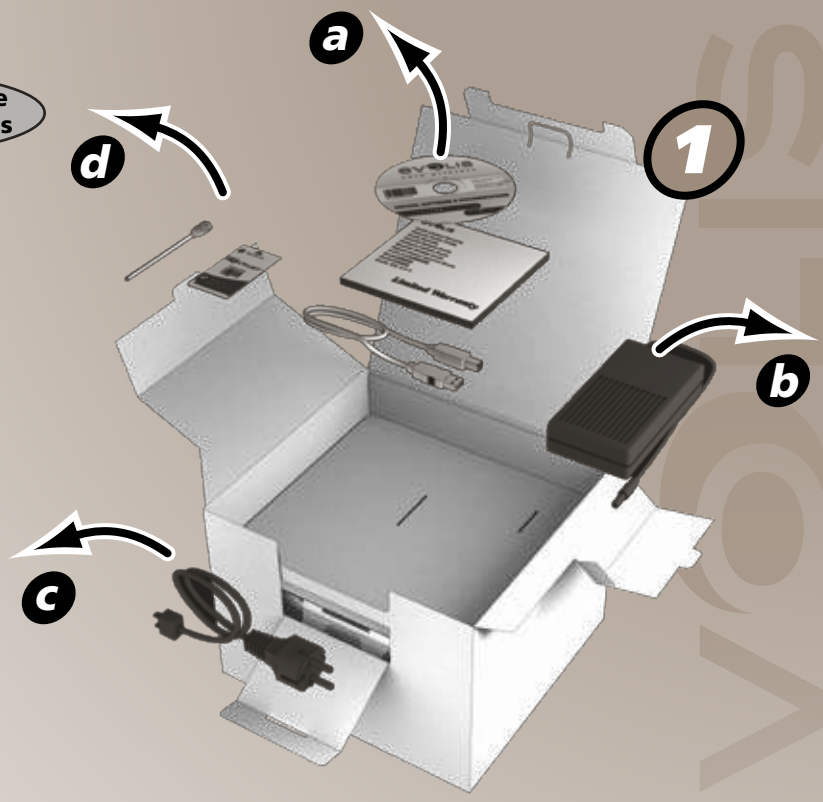
a
1
d
b
c

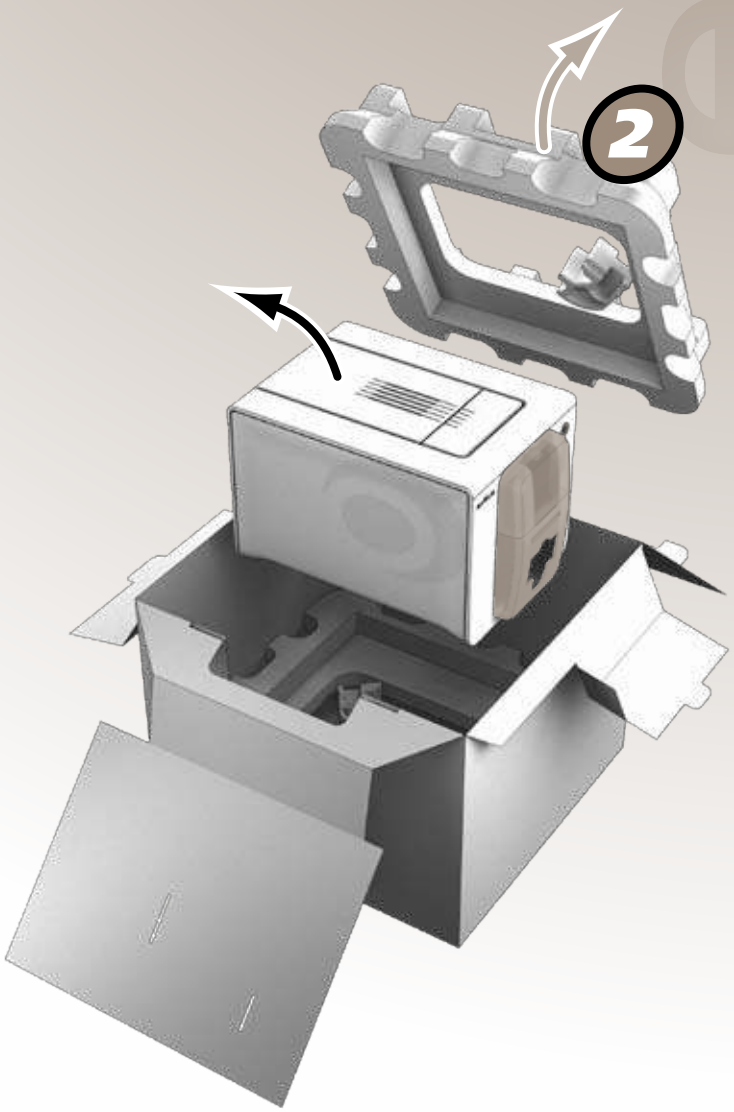
2

Zenius

1/7

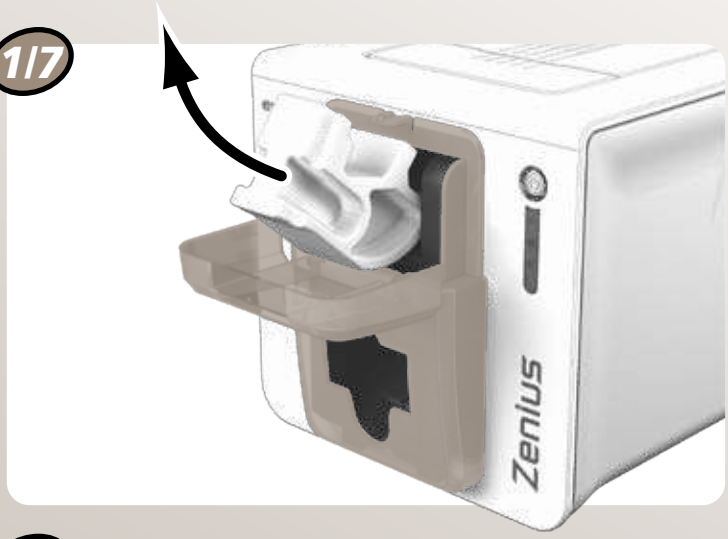

2/7

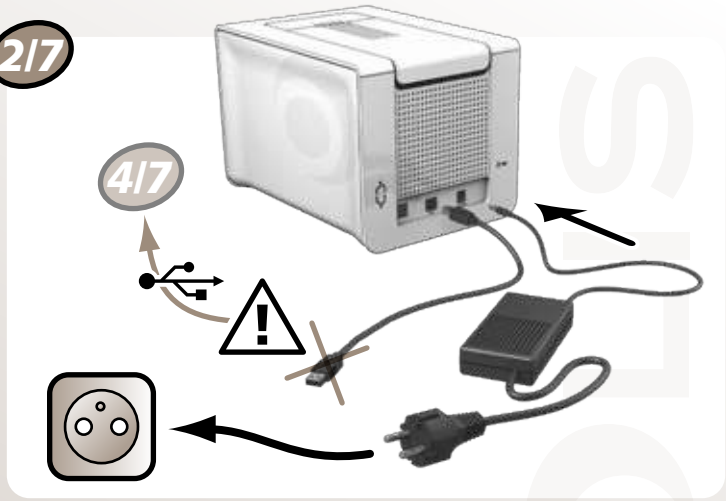

3/7

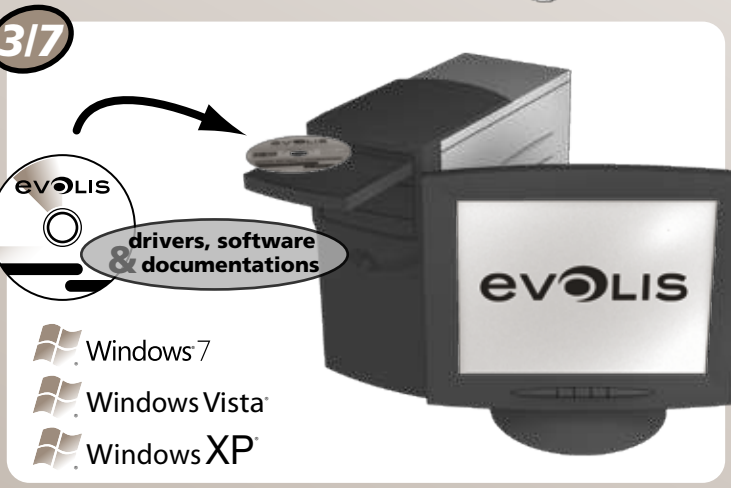

4/7

5/7

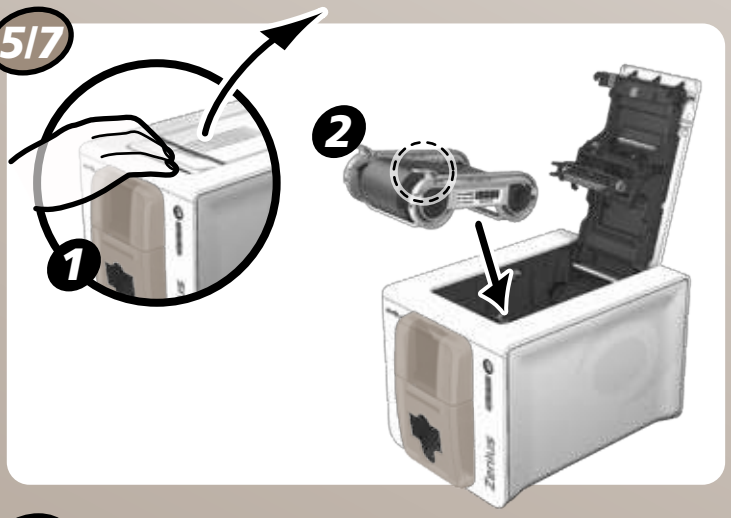

6/7

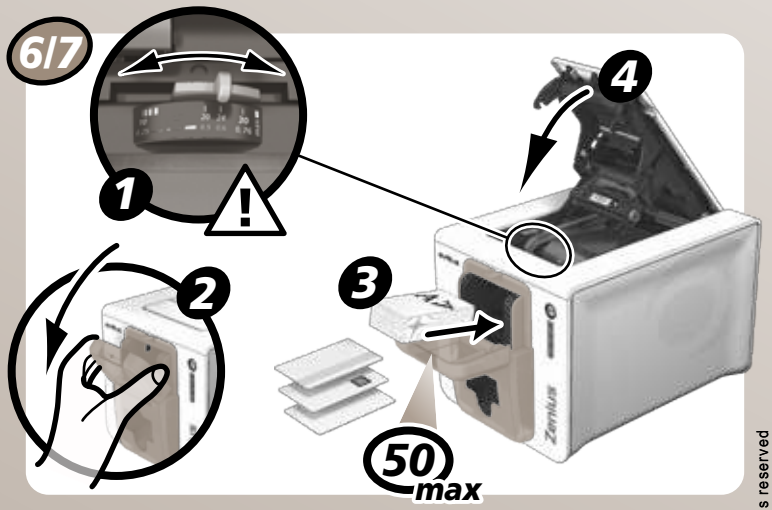

7/7

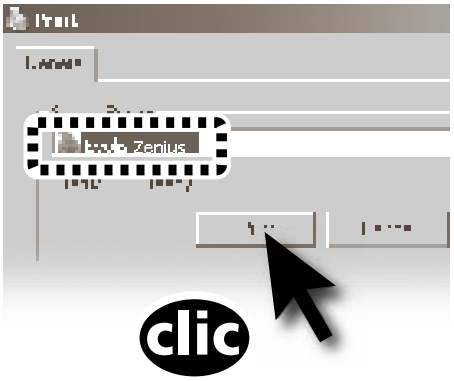

CP010558 Rev. B0 • © 2011 Evolis Card Printer - All rights reserved