virtufit

Water Resistance Row 800 Rowing Machine

User Manual

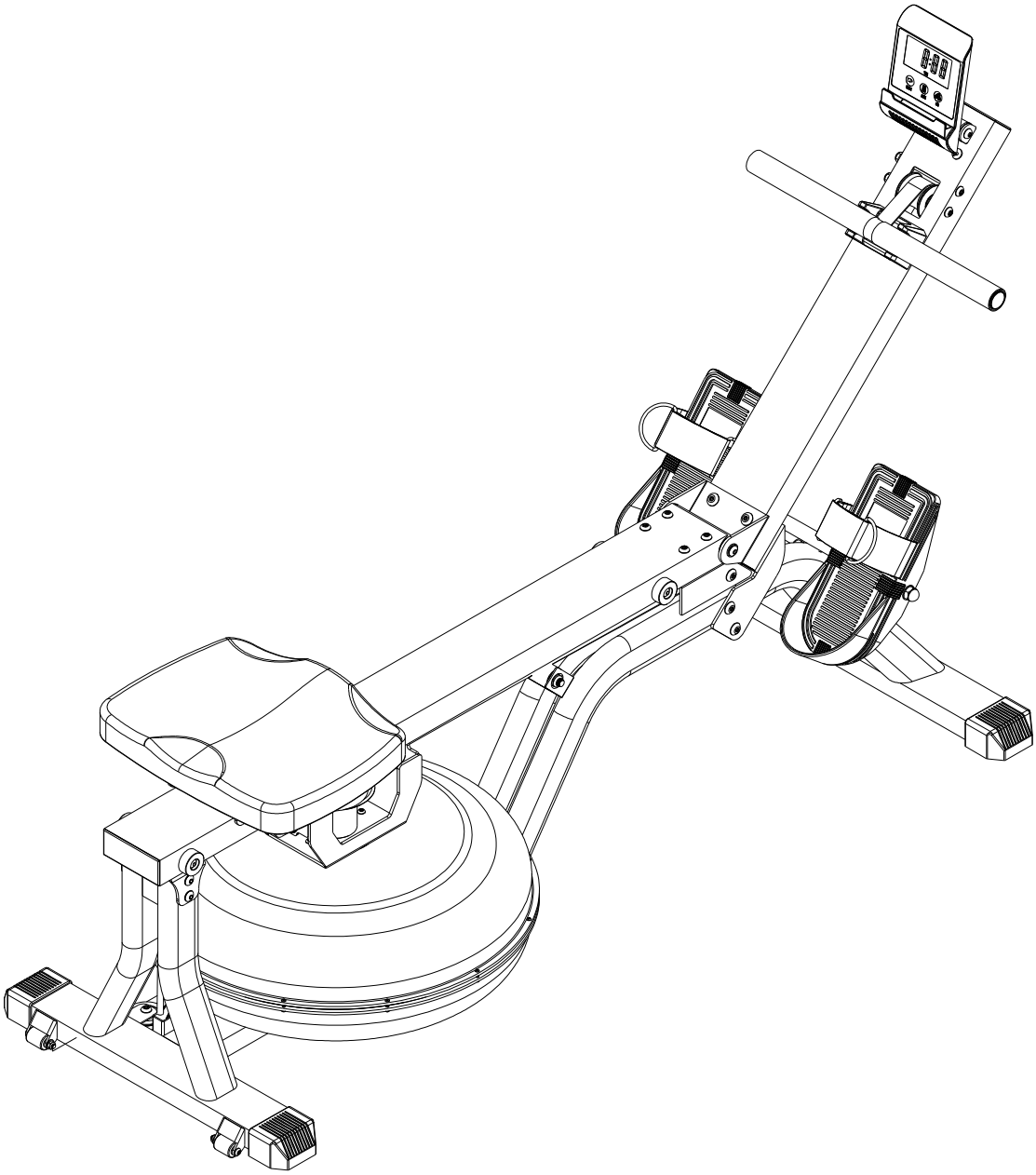

EN

INDEX

SAFETY INSTRUCTIONS	3 - 4
CHECKLIST	5 - 6
ASSEMBLY INSTRUCTIONS	7 - 10
MOVING THE ROWING MACHINE	11
FILL AND EMPTY THE WATER TANK	12
MAINTENANCE	13 - 14
CONTROL PANEL	15 - 17
EXPLODED DRAWING	18
PARTS LIST	19 - 20
TRAINING INSTRUCTIONS	21 - 23

WARNING:

Before beginning any exercise program consult your physician. This is especially important for people who are over 35 years old or who have pre-existing health problems. Read all instructions before using any fitness equipment. Do not operate this exercise equipment without properly fitted guards, as the moving parts can present a risk of serious injury if exposed.

ATTENTION

- It is important to read this entire manual before assembling and using the equipment. Safe and effective use can only be achieved if the equipment is assembled, maintained and used properly. It is your responsibility to ensure that all users of the equipment are informed of all warnings and precautions.

- Before starting any exercise program, you should consult your doctor to determine if you have any medical or physical conditions that could put your health and safety at risk, or prevent you from using the equipment properly. Your doctor's advice is essential if you are taking medication that affects your heart rate, blood pressure or cholesterol level.

- Be aware of your body's signals. Incorrect or excessive exercise can damage your health. Stop exercising if you experience any of the following symptoms: pain, tightness in your chest, irregular heartbeat, extreme shortness of breath, lightheadedness, dizziness or feelings of nausea. If you do experience any of these conditions you should consult your doctor before continuing with your exercise program.

- Keep children and pets away from the equipment. The equipment is designed for adult use only.

- Use the equipment on a solid, flat level surface with a protective cover for your floor or carpet. To ensure safety, the equipment should have at least 0.5 metres of free space all around it.

- Before using the equipment, check that the nuts and bolts are securely tightened.

- The safety of the equipment can only be maintained if it is regularly examined for damage and/or wear and tear.

- Always use the equipment as indicated. If you find any defective components while assembling or checking the equipment, or if you hear any unusual noises coming from the equipment during use, stop immediately. Do not use the equipment until the problem has been rectified.

- Wear suitable clothing while using the equipment. Avoid wearing loose clothing that may get caught in the equipment or that may restrict or prevent movement.

- The max user weight is 140 KGS. Braking ability is independent of speed.

- The equipment is not suitable for therapeutic use.

- Care must be taken when lifting or moving the equipment so as not to injure your back. Always use proper lifting techniques and/or seek assistance if necessary.

- Please keep the space at least 1 to 2 meter at the end of base frame to escape any accidents!

- Place the device on a clean and flat surface. Do not place the equipment on a thick carpet.

- The device is for indoor use and not for outdoor use to prevent damage. Keep the storage location dry, clean and flat. It is forbidden to use the device for purposes other than training.

- Only use the machine in an environment with an ambient temperature between 10 ° C and 35 ° C. Only store the device at an ambient temperature between 5 ° C and 45 ° C

Warranty claim is excluded if the cause of the defect is the result of:

- Maintenance assembly and repair work not carried out by an official dealer.
- In the event of improper use, neglect and / or poor maintenance.
- Failure to maintain the fitness equipment in accordance with the manufacturer's instructions (see the enclosed manual).

CHECKLIST

TOOLKIT

When you open the carton, you will find the below parts in the carton:

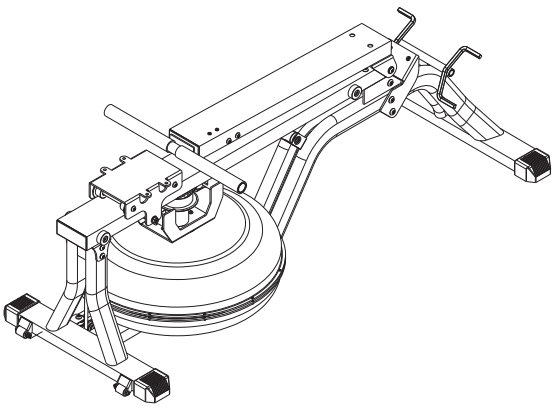

NO.1

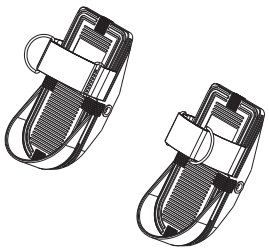

NO.43L/R

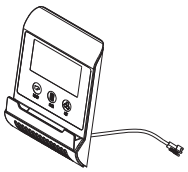

NO.54



NO.45



NO.12

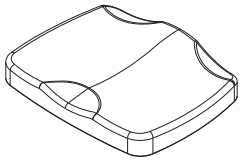

NO.39

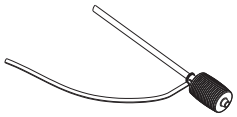

NO.100

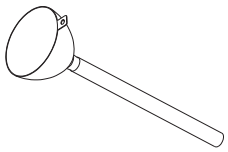

NO.101

#	DESCTIPTION	QTY
1	Main Frame	1
12	Pedal Shaft	1
39	Seat	1
43 L/R	Pedal	2

#	DESCTIPTION	QTY
45	Handlebar Holder	1
54	Console	1
100	Syphon pump	1
101	Funnel	1

TOOLKIT


#102 S4 1PC


#103 S6 1PC

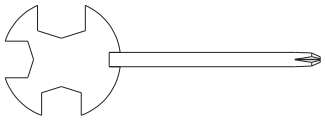
#104 S13-17 2PCS


#63 M10x115 1PC


#87 M10 1PC


#65 M10*55 2PCS


#58 M5*10 2PCS


#75 M6*16 6PCS


#82 M10 3PCS


#81 M10 2PCS


#86 M10 2PCS

Missing parts: If you think you are missing certain parts in your package, carefully check the styrofoa and the rowing machine. Some parts (bolts, screws, etc.) are already attached to / in the rowing machine.

Error message: Ensure that all cables are carefully attached. The aluminum legs are very sensitive and must remain straight. Do you receive an error message after mounting your rowing machine? Then you have to straighten these aluminum legs again, this may cause the error message to disappear.

Socket screws: The rowing machine contains socket screws, make sure that the allen key is firmly in the bolt before you apply force to the key. In this way you prevent the head of the socket head screw from being rotated.

STEP 1

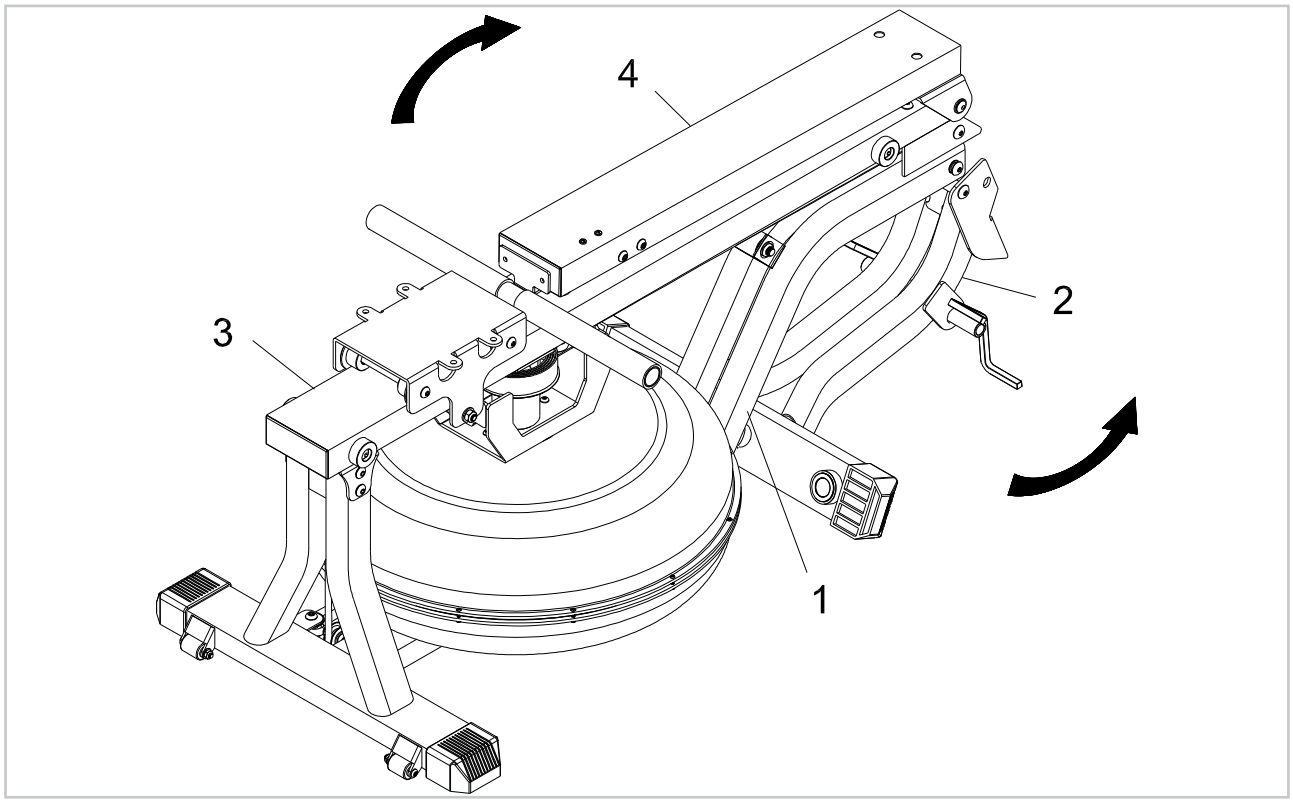

- Unfold the Front Support (2) away from the Main Frame (1);
- Unfold the Upright (4) away from the Rail (3).

STEP 2

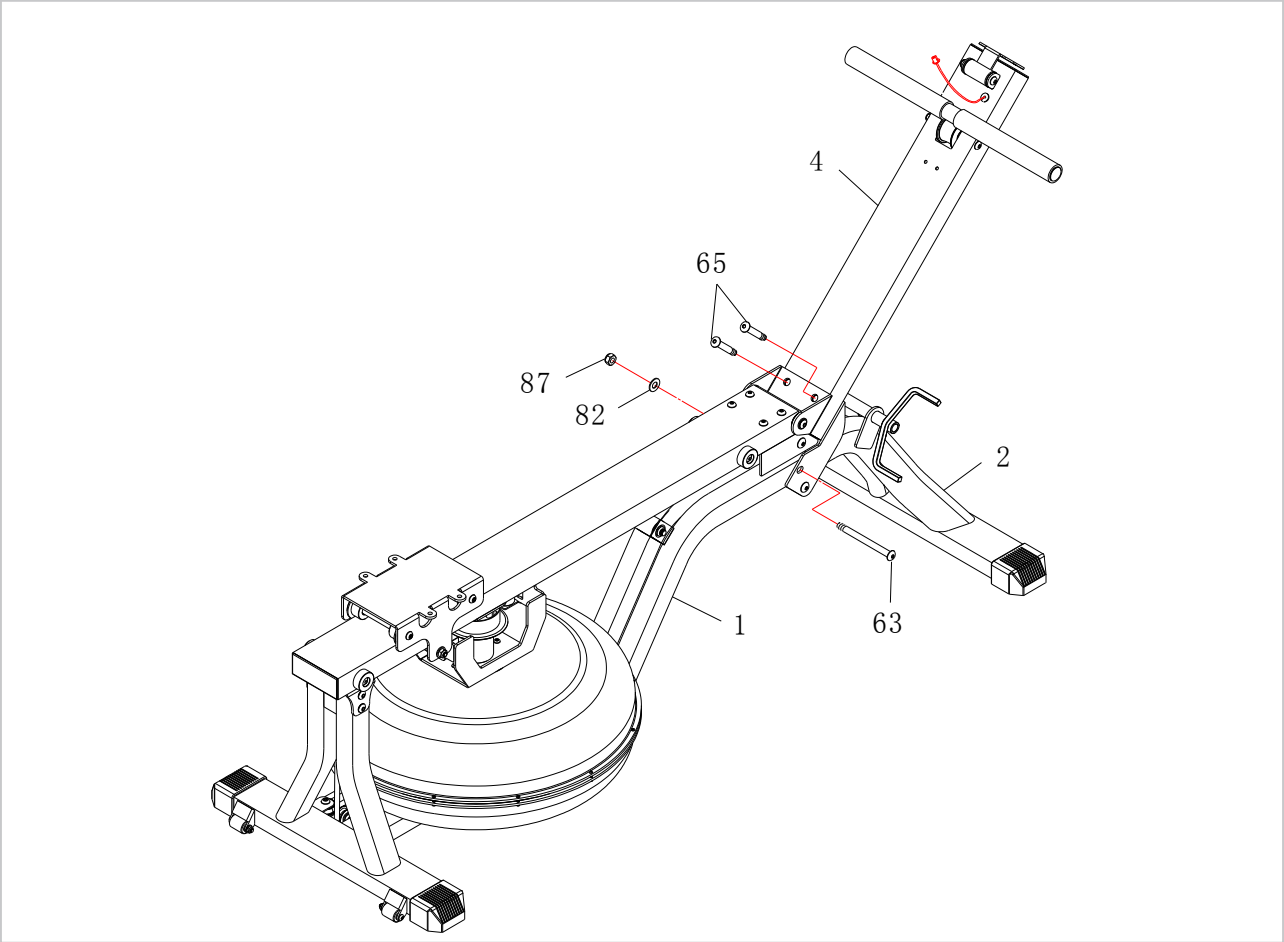

- Bolt the Front Support (2) to the Main Frame (1) with Button Head Bolt (M10 X 1.5 X 115mm)(63) Washer(M10)(82), and Nylock Nut (M10 X 1.5)(87);

- Attach the Upright (4) to the Front Support(2) with Button Head Bolt (M10 X 1.5 X 55mm)(65).

STEP 3

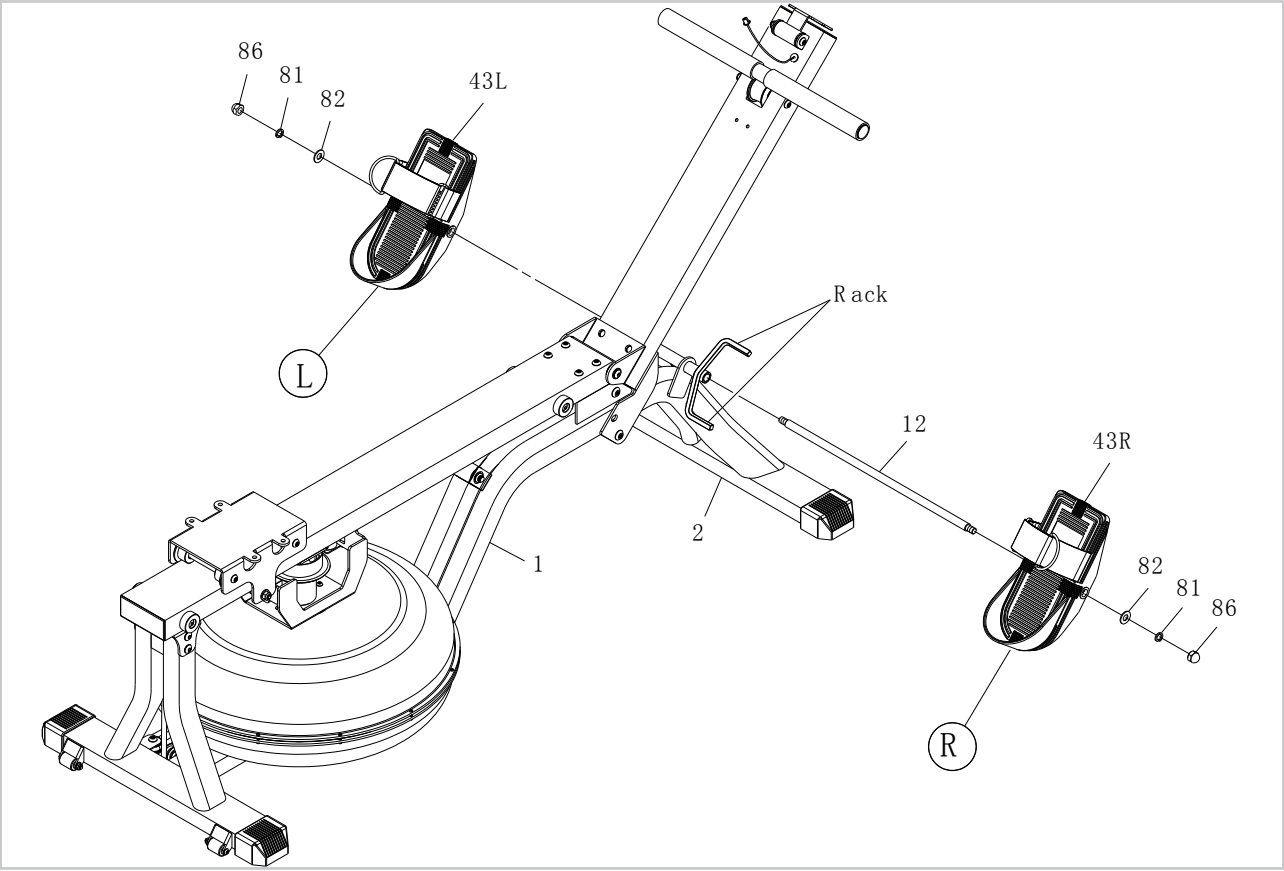

- There is an "L" decal on the left Pedal Cap(43L), and an "R" decal on the right Pedal Cap (43R);
- Insert the Pedal Shaft (12) through the tube located on the Front Support (2);
- Slide the right Pedal Cap (43R) onto the right side on the Pedal Shaft (12) and make it ride on the Rack on the Front Support (2);
- Slide the left Pedal Cap (43L) onto the left side on the Pedal Shaft (12) and make it ride on the Rack on the Front Support(2);
- Then secure the Pedal Caps (43R, 43L) with Washers(M10)(82), Lock Washer (M10)(81), and Acorn Nuts (M10 X 1.5)(86) at both ends of the Pedal Shaft (12);
- You need to use two combination Wrenches to tighten the Acorn Nuts (M10 X 1.5)(86) at both ends of the Pedal Shaft(12) at the same time.

STEP 4

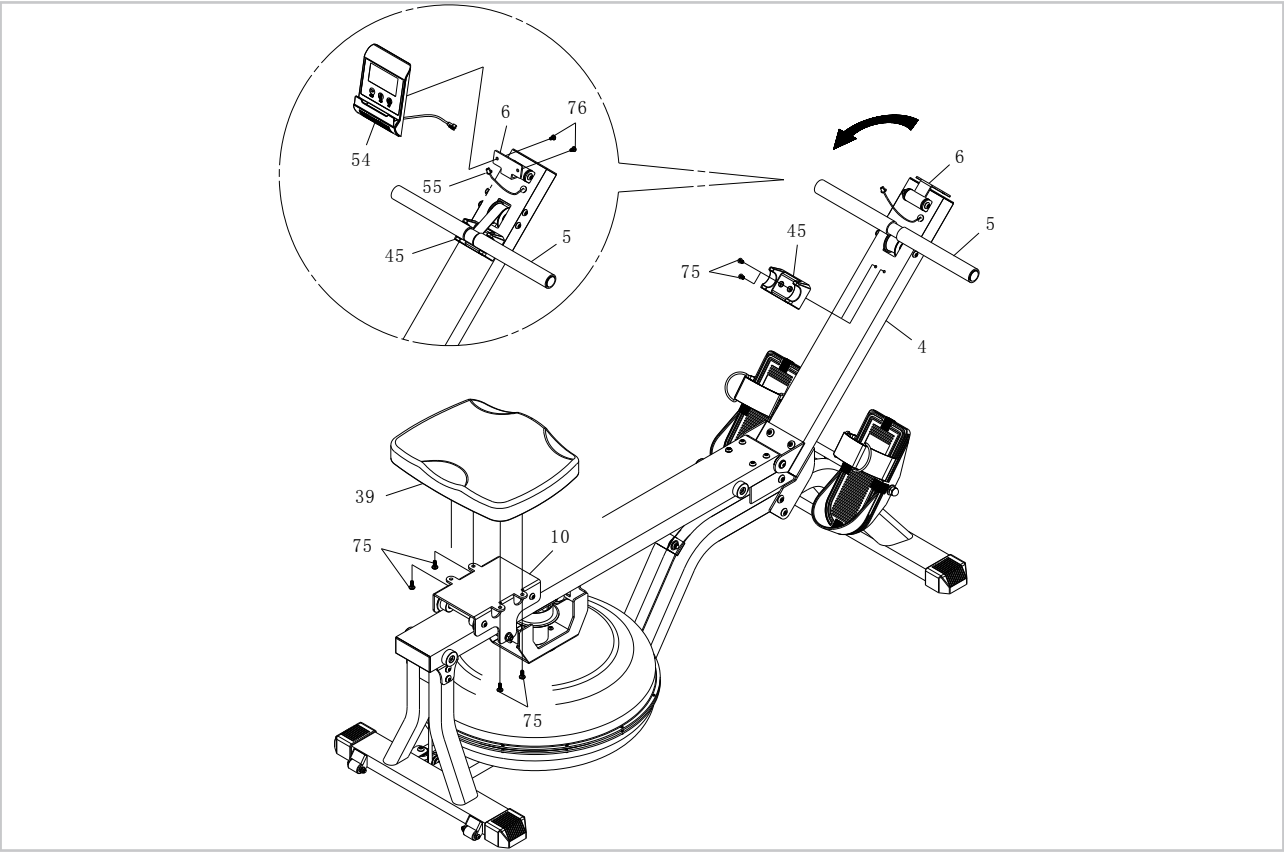

- Attach the Seat(39) to the Seat Carriage(10) with 4x Button Head Bolts (M6 X 1 X 15mm)(75);

- Attach the Handlebar Holder (45) to the Upright(4) with 2x Button Head Bolts (M6 X 1 X 15mm(75). Place the Handlebar(5) onto the Handlebar Holder (45).

- Install two AAA batteries into the Meter(54), check page 15 for detailed battery installation instructions. Attach the Meter(54) to the Meter Plate(6) with 2x Round Head Bolts (M5 X 0.8 X 10mm)(76). Plug the Sensor Wires(55) into the connecting wires of the Meter(54), and push the excess wires back into the Upright(4).

NOTE! ***Store your machine in a dry area away from children and high traffic areas as shown in the illustration. Be sure it is secure and cannot fall onto small animals or children.***

MOVING THE MACHINE

To move the machine, lift up the Front support (2)until the Moving Wheels (36) on the main frame touch the ground. With the wheels on the ground, you can transport the rower to the desired location with ease.

NOTE! ***The seat can slide.***

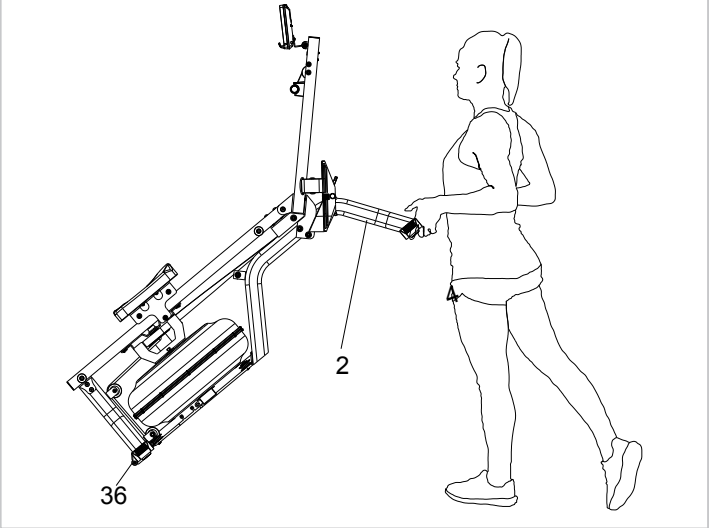

ADJUSTING BALANCE

Adjust the Stand (59) below the Stabilizers of the machine if it is unbalanced during use.

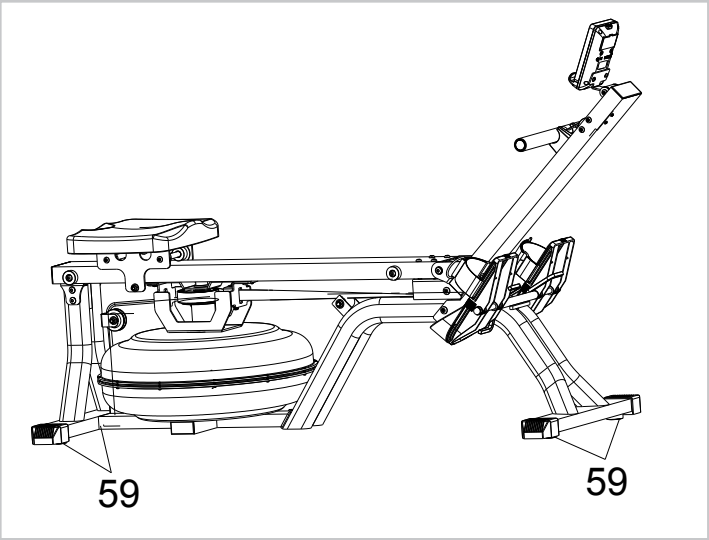

NOTE!

- ***Fill the tank with municipal water, do not use well water. If municipal water is unavailable, use distilled water. Refer to the Maintenance section for recommendations on water treatment.***
- ***The water in the tank is not human or animal consumption. Please dispose of the water properly after removal from the tank.***

FILL AND EMPTY THE WATER TANK

- Remove the Fill Plug(21) from the upper tank(18). To fill with water, refer to illustration C. Place the Funnel(101) into the tank. Use a water cup, or the Syphon Pump(100) and a bucket to fill the tank. Use Water level gauge on the side of tank to measure volume of water in tank to the desired level.
- To empty the tank, refer to illustration D. Place a bucket next to the rower. Use the Syphon Pump(100) to pump out the water in the tank to the desired leve.
- Once completed, inset the Fill Plug(21) into the Upper Tank(18). Please wipe excess water from the frames after filling.

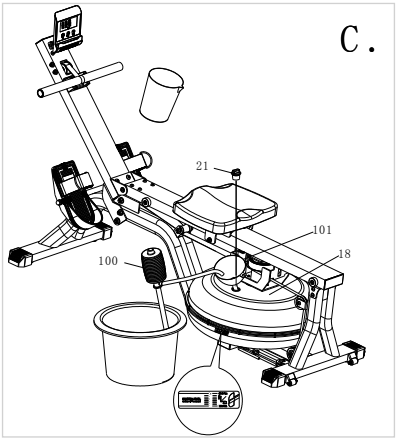

WATER LEVEL

Refer to the detail view of illustration C. The water level gauge is positioned on the side of the tank. **DO NOT** fill above the Maximum level - this could void the warranty. The amount of resistance is dictated by the amount of water in the tank. For example level 2 of water offer light resistance, Level 6 offers a heavier resistance.

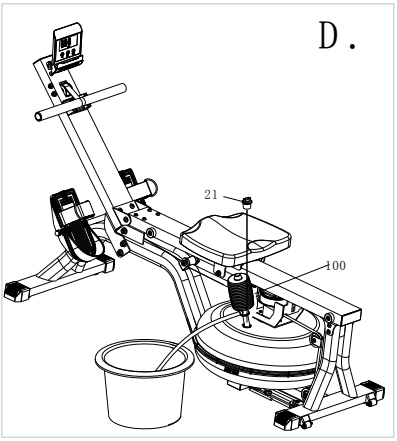

MAINTENANCE

Safe and effective use can only be achieved if the device will be assembled and maintained well. It is your responsibility to ensure that the equipment is regularly maintained. Parts that are already used and / or damaged must be replaced before continuing using. The rower machine may only be used indoors and stored away, prolonged exposure to weathering and changes in temperature / humidity can have a serious impact on the electrical components and moving parts of the rowing machine.

DAILY MAINTENANCE

- Clean and remove sweat after each use. Do not use aggressive cleaning agents and ensure that the device remains free of moisture.
- Check that the rail and the wheels under the seat are free from dust and dirt.
- Sit on the seat and pull on the handlebar to verify that the water system provides resistance and the seat travel is smooth and stable

SEMI-ANNUAL MAINTENANCE

- Inspect all bolts and nuts in connection with moving parts of the device, tighten as required.
- Check the mobility of moving parts and components of the use equipment, silicone spray if necessary.
- Periodic maintenance is required to maintain proper condition of the water in the tank. The water must be refreshed periodically by adding a water purification tablet, such as sodium dichlor (56% chlorine) every 4-6 months. NEVER USE POOL CHLORINE (TRICHLOR 90% CHLORINE) OR CHLORINE BLEACH. Use of these products will void the warranty and damage the product.

NOTE! ***It is the user / owner's responsibility to ensure that periodic maintenance is performed.***

Worn or damaged components shall be replaced immediately. Contact your dealer for help.

BATTERY

AAA BATTERIJEN

The monitor uses on "AAA" battery. You can replace the battery through the back of the unit.

The batteries must be installed correctly. If the screen is unreadable or only parts of the image work, follow the next step: Remove the batteries and wait 15 seconds, then reinsert the batteries correctly.

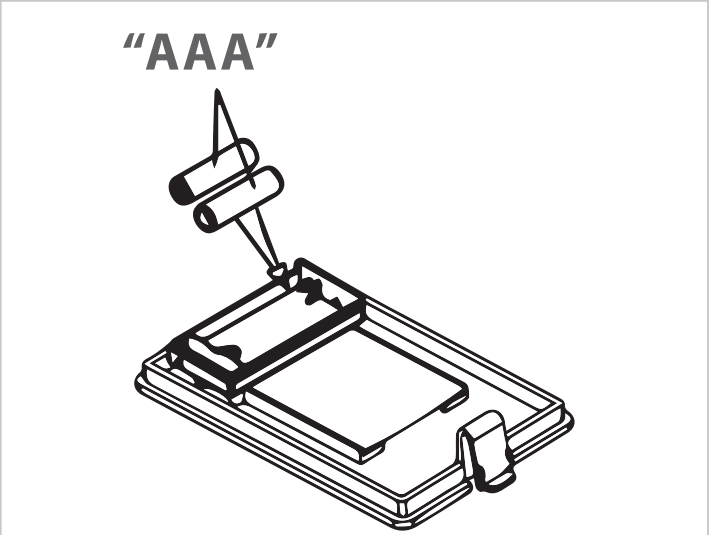

ADVICE FOR HANDLING BATTERIES

1. Remove the batteries when they are exhausted or if you do not use the product for an extended period of time in order to avoid hazards through leaking batteries.
2. Do not recharge batteries nor dissemble or throw then into fire. Danger of explosion!
3. Pay attention to the polarity (+) and (-). Always replace all the batteries; do not mix old and new batteries, or different battery types.
4. Use preferably alkaline batteries, as they have a longer operation time then usual zinc-coalbatteries.
5. A change of batteries is necessary when the display becomes weaker or completely faded.

CHANGING THE BATTERIES

1. If you see an improper display on the monitor, please replace the batteries to have a good result.
2. Use 2 pcs 1.5 AAA batteries as power supply. See image opposite to install or replace the images.

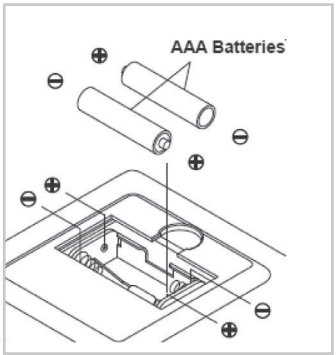

NOTE:

Keep the console away from direct sunlight. Dry the surface of the console when it is covered with drops of sweat. Do not lean on the console. Only touch the display with the tip of your finger. Make sure that your nails or sharp objects do not touch the display.

CONSOLE



BUTTON	EXPLANATION
(1) POWER ON	Start rowing or press any button.
(2) POWER OFF	Automatically shuts off after 4 minutes of inactivity.
(3) MODE	In the setting mode, press and release to select each function for preset target values for Time, Count, Distance, Calories, and Pulse. Press amd release to select functions for display for Time, Count, Distance, Calories, and Pulse.
(4) SET	In the setting mode, press to set target values. Press the button and hold it down for two seconds, the meter will continue to add the values, release the button to stop.
(5) RESET	In the setting mode, press the button to reset the setting values to zero. Press the button and hold it down for two seconds to reset all functions to zero

FUNCTONS

BUTTON	EXPLANATION
(6) SCAN	Automatically scans Time, Count, Distance, Calories, and Pulse in sequence with a change every six seconds. Press and release the Mode button until "Scan" appears on display.
(7) TIME	Displays the time from 1 sec. Up to 99:59 minutes
(8) COUNT	Displays the total number of strokes you have taken from zero to 9999 strokes.
(9) DISTANCE	Displays distance from zero to 9999 meters.
(10) CALORIES	Displays the calories burned from zero to 9999 Kcal. The calorie readout is an estimate for an average user. It should be used only as a comparison.
(11) PULSE	Displays the heart rate, from 40 to 240 beats per minute. To use this function, you must wear the Heart Rate Transmitter around your chest so the receiver which is built into the rower registers your heart rate from the Heart Rate Transmitter for displaying. Each heart rate signal will be accompanied with one " " symbol flash.

NOTE! ***The Heart Rate Transmitter(95) is not a medical device. Maintaining a consistent signal can be difficult due to the varying distances experienced during the rowing stroke. The pulse function is a great tool to optimize your workout, but should be used as a reference only.***

PRESET VALUES OPERATION

You can pull on the Handlebar (5) to power on the meter and workout with the meter directly. Or, you can preset the function values for counting down.

Press and release the Mode button until "SCAN" does not appear on dispay, the meter will enter setting mode. Use Set and Reset buttons to input the values, and press Mode to confirm. Or, just press the Mode button to skip the setting and move to the next function. After all the desired settings are chosen, begin pulling on the Handlebar (5) to start the workout. Time (1:00 to 99:00) Count (10 to 9990) Distance (100 to 9900 meter) Calories (10 to 9990 Kcal).

NOTE!

- ***You may preset values for several functions. The preset function values will start to count down. When you complete one of the preset functions, the value of this completed function will start to count up, while the other preset functions will continue to count down.***
- ***The Meter will shut off automatically after 4 minutes of inactivity. All function values will be kept. You can continue to work out with these function values. Or, press the Reset or Mode button and hold it down for two seconds to reset all functions to zero.***

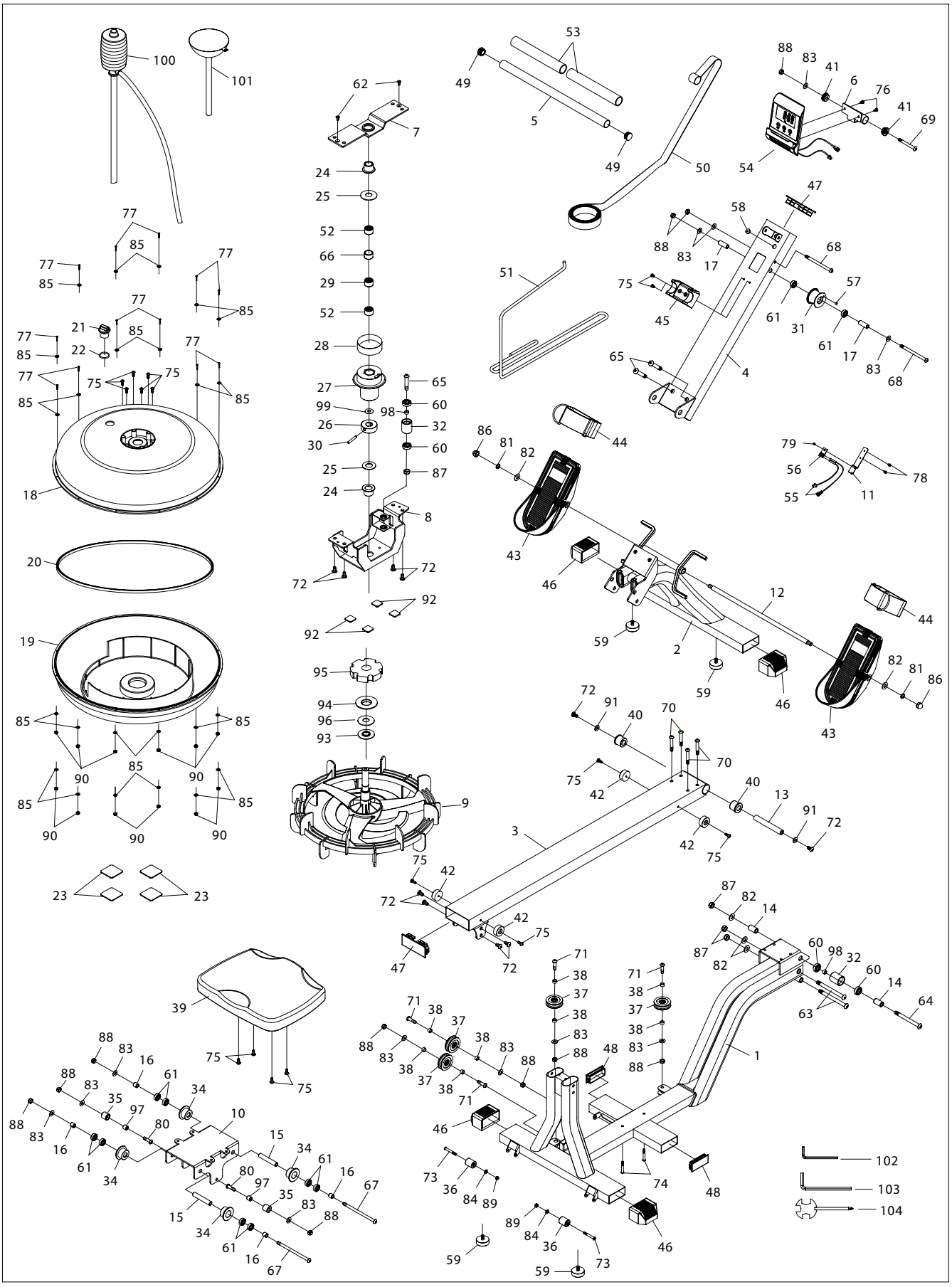
100
101
62
7
24
25
52
66
29
52
28
27
99
26
30
25
24
65
98
60
32
60
87
8
72
72
92
92
95
94
96
93
9
53
49
5
49
50
88
83
41
6
76
41
69
54
47
58
88
83
17
68
75
45
57
61
31
61
17
83
68
65
4
51
44
86
81
82
43
46
59
2
12
59
46
44
43
82
81
86
79
56
55
78
11
77
85
77
85
77
85
21
22
77
85
77
85
75
75
85
77
85
18
20
19
85
85
85
85
90
90
85
85
90
90
90
23
23
72
91
40
70
70
75
42
40
13
91
72
42
75
3
75
42
72
42
75
47
72
87
82
14
87
82
60
98
32
60
14
64
63
39
75
75
88
83
16
61
34
88
83
35
97
80
10
88
83
16
61
34
15
34
61
16
67
80
97
35
83
88
15
34
61
16
67
71
38
37
38
83
88
48
88
83
38
37
38
71
46
73
36
84
89
59
89
84
36
73
59
46
74
48
1
102
103
104

PARTS LIST

#	DESCRIPTION	QTY
1	Main frame	1
2	Front stabilizer	1
3	Rail	1
4	Upright	1
5	Handlebar	1
6	Meter Plate	1
7	Mounting Bracket	1
8	Tank Brace	1
9	Impeller	1
10	Seat Carriage	1
11	Sensor Bracket	1
12	Pedal Shaft	1
13	Rail Shaft	1
14	Idle Roller Spacer	2
15	Roller Long Spacer	2
16	Roller Short Spacer	4
17	Strap Pulley Spacer	2
18	Upper Tank	1
19	Lower Tank	1
20	Rubber Ring Seal	1
21	Fill Plug	1
22	Fill Plug Seal	1
23	Lower Pad	4
24	Strap / Bungee Pulley Bushing	2
25	Plastic Washer	2
26	Shaft Retainer	1
27	Strap / Bungee Pulley	1
28	Hook pad	1
29	One-way Bearing HF2016	1
30	Spring Pin Ø6X40mm	2
31	Strap Pulley	

#	DESCRIPTION	QTY
32	Idle Roller	2
34	Seat Roller	4
35	Lower Seat Roller	2
36	Moving Wheel	2
37	Bungee Pulley	4
38	Spacer for Bungee Ø8.1XØ12X	8
39	Seat Pulley 6.5mm	1
40	Rail Bushing Ø16 X 31.8 X 12.5 mm	2
41	Meter Plate Bushing Ø8.2xØ27x10mm	2
42	Stopper	4
43	Pedal	2
44	Pedal Strap	2
45	Handlebar Holder	1
46	Endcap 30mm X 70mm	1
47	Rectangular Plug 40mm X 100mm	2
48	Rectangular Plug 30mm X 60mm	2
49	Round plug Ø28.6mm	2
50	Strap	1
51	Bungee cord	1
52	Needle Roller Bearing HK2010	2
53	Hand Grip	2
54	Console	1
55	Sensor Wire	2
56	Sensor Holder	1
57	Magnet	1
58	Nut	1
59	Stand	4
60	Beaering 6000zz	6
61	Bearing 608zz	10
62	Bolt Flat Sock Head M10x1.5x115mm	2
63	Bolt M10 X 1.5 X 105 mm	1

PARTS LIST

#	DESCRIPTION	QTY
64	Bolt M10 X 1.5 X 55mm	3
65	Bolt M10 X 1.5 X 55mm	3
66	Bearing Spacer	1
67	Bolt M8 X 1.25 X 135mm	2
68	Bolt M8 X 1.25 X 110mm	2
69	Bolt M8 X 1.25 X 135mm	1
70	Bolt M8 X 1.25 X 50mm	4
71	Bolt M8 X 1.25 X 30mm	4
72	Bolt M8 X 1.25 X 15mm	10
73	Bolt M6 X 1 X 45mm	2
75	Bolt M6 X 1 X 15mm	10
76	Bolt M5 X 0.8 X 10mm	2
77	Screw, Round Head M3 X 0.5 X 20mm	12
78	Screw, Round Head M4 X 16mm	2
79	Screw, Round Head M4 X 12m	1
80	Bolt Ø10X12.5mm, M8X1.25X15mm	2
81	Lock Washer M10	5
82	Washer M10	12
83	Washer M8	2
84	Washer M6	2
85	Washer M3	25
86	Arcon Nut M10 X 1.5	4
87	Arcon Nut M10 X 1.5	5
88	Nylock Nut M8 X 1.25	11
89	Nylock Nut M6 X 1	2
90	Nylock Nut M3 X 0.5	12
91	Large Washer M8 X Ø20mm	2
92	Upper pad 25mm X 25mm	4
93	Impeller Seal	1
94	Tank Seal	1
95	Foam Spacer	1

#	DESCRIPTION	QTY
96	PC Plate	1
97	Roller Spacer Ø8.1 X Ø10 X 13mm	1
98	Idle Roller Spacer	2
99	Stainless Washer	1
100	Syphon Pump	1
101	Funnel	1
102	Allen Wrench 4mm	1
103	Allen Wrench 6mm	1
104	Combination Wrench	1
105	Screw ST5.5*16	4
106	Ribbon guide wheel	1
107	Bolt, button head M10x60	1

A successful exercise program consists of a warm-up, aerobic exercise, and a cool-down. Do the entire program at least two and preferably three times a week, resting for a day between workouts. After several months, you can increase your workouts to four or five times per week.

WARMING UP

The purpose of warming up is to prepare your body for exercise and to minimize injuries. Warm up for two to five minutes before strength-training or aerobic exercising. Perform activities that raise your heart rate and warm the working muscles. Activities may include brisk walking, jogging, jumping jacks, jump rope, and running in place.

STRETCHEN

Stretching while your muscles are warm after a proper warm-up and again after your strength or aerobic training session is very important. Muscles stretch more easily at these times because of their elevated temperature, which greatly reduces the risk of injury. Stretches should be held for 15 to 30 seconds.

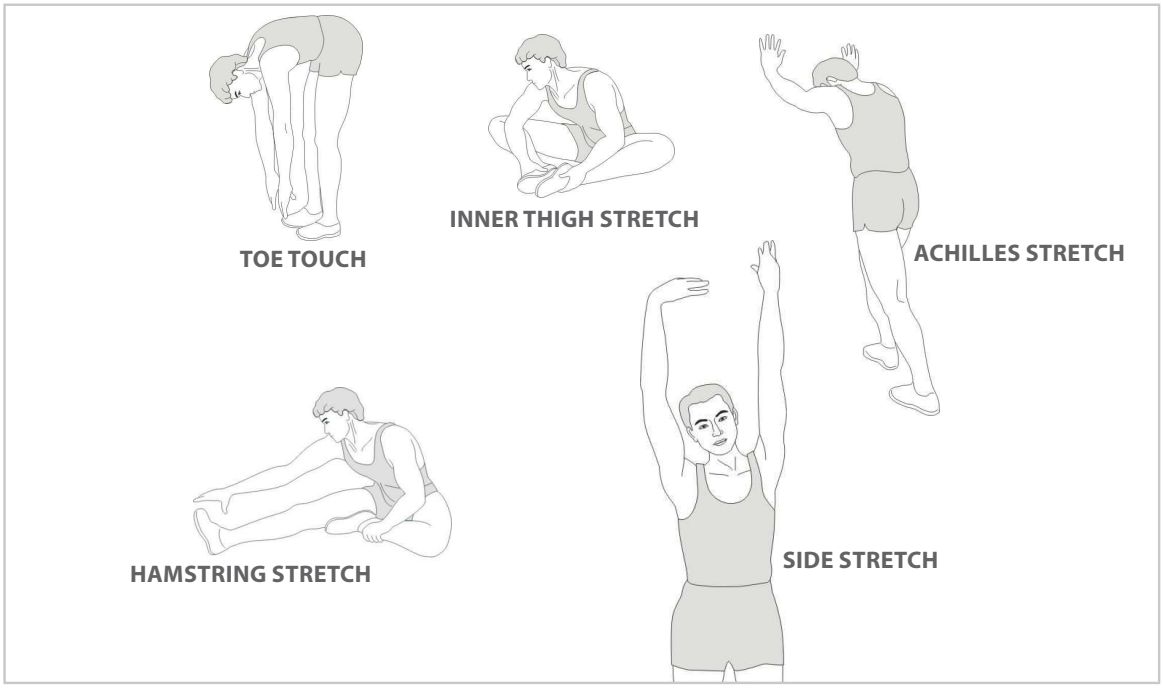

COOLING DOWN

The purpose of cooling down is to return the body to its normal or near normal, resting state at the end of each exercise session. A proper cool-down slowly lowers your heart rate and allows blood to return to the heart.

TRAINING TIME

Rowing is a strenuous training style. Because of it, it is better to start with a short and easy program and continue to a longer and intensive workout. Start rowing for about 5 minutes and increase the workout length gradually to improve your fitness. Finally, you should be able to row for 15-20 minutes. Don't try to do it too quikly. Try to train on alternate days, 3 times a week. Take recovery time between workouts.

OEFENINGFASE

It is a phase, during which you should put in your effort. After regular workout, your leg muscles should get more flexible.Keep steady tempo throughout your exercising. The workout intensity should be sufficient to raise your heartbeat into the target zone as shown below.

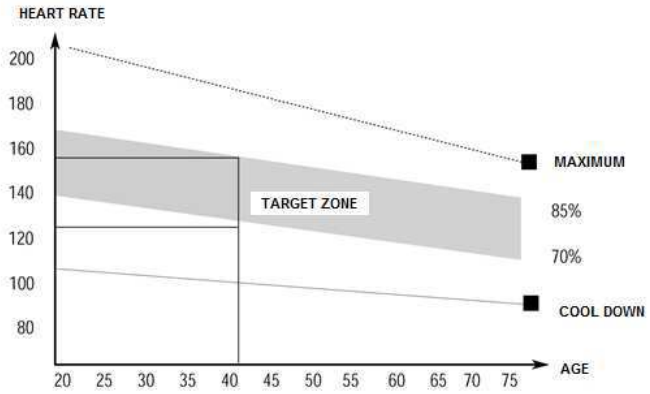

NOTE! ***This stage should last for at least 12 mins. Thus, most people start at approx. 15-20 mins.***

BASIC ROWING GUIDELINES

Rowing is an extremely effective form of exercising. It strengthens your heart and improves blood circulation as well. There are involved all major muscle groups of back, waist, arms, shoulders, hips and legs.

1. Sit on the saddle and fasten your feet to the pedals using Velcro straps. Then take hold of the rowing bar.
2. Take the start position, lean forward with your arms straight and knees bent as shown in Fig. 1.
3. Push your body backwards while simultaneously straightening your back and legs (Fig. 2). Continue this movement until you are leaning slightly backwards. Bring your arms out of the side during this phase (Fig. 3).
4. Thereafter return to the second position and repeat it as shown below.

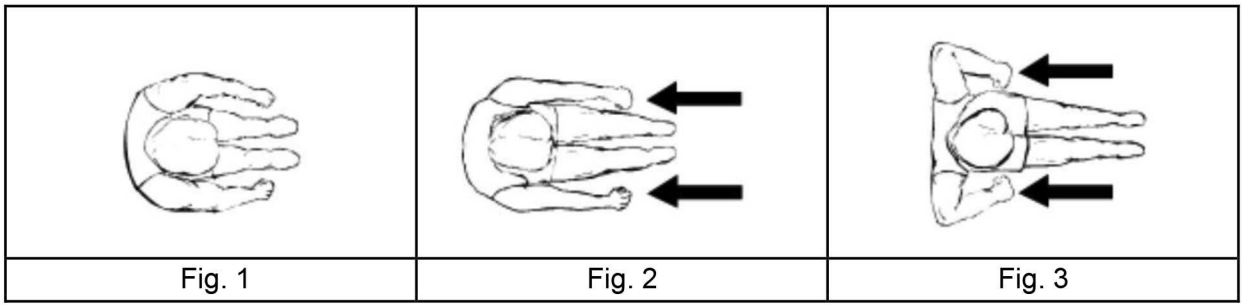

Fig. 1	Fig. 2	Fig. 3

ROW ALTERNATION - ARMS

This workout should tone your arm, shoulder, back and abdominal muscles.

1. Sit on the machine as shown in Fig. 4. Straight your legs, lean forward and grasp the handles.
2. Control your moving and gradually lean back to just past the up-right position (Fig. 5) and continue to pull the handles towards your chest (Fig. 6).
3. Return to the starting position and repeat.

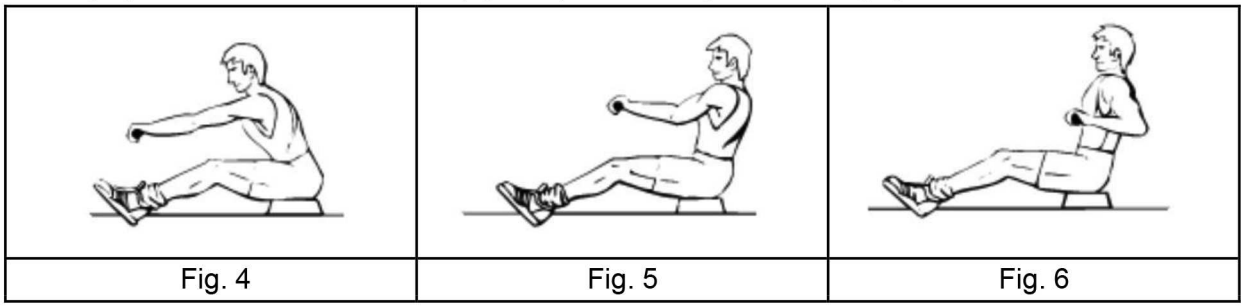

Fig. 4 | Fig. 5 | Fig. 6

ROW ALTERNATION - LEGS

This workout helps toning your leg and back muscles.

1. Keep your back straight and arms out-stretched, bend your legs until you will grasp the rowing handles in the starting position (Fig. 7).
2. Use your legs to push your body back (Fig. 8) while keeping your arms and back straight as shown in Fig. 9.

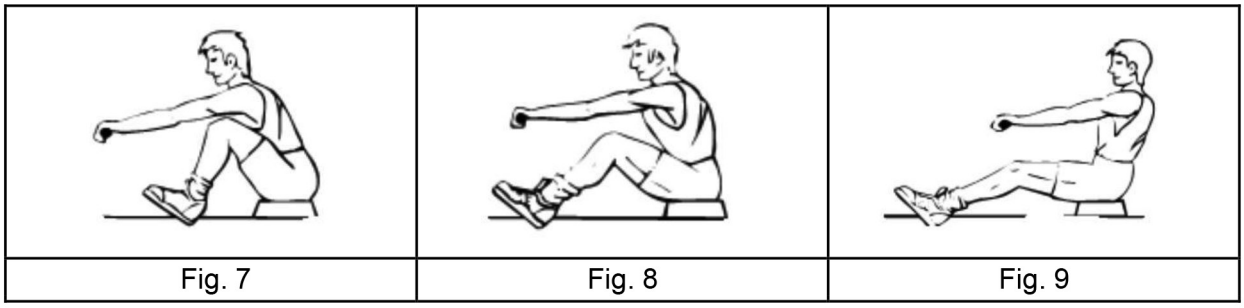

Fig. 7 | Fig. 8 | Fig. 9



For questions or missing parts please contact your dealer.