6729(S)

4 260466 541677

TRANGO

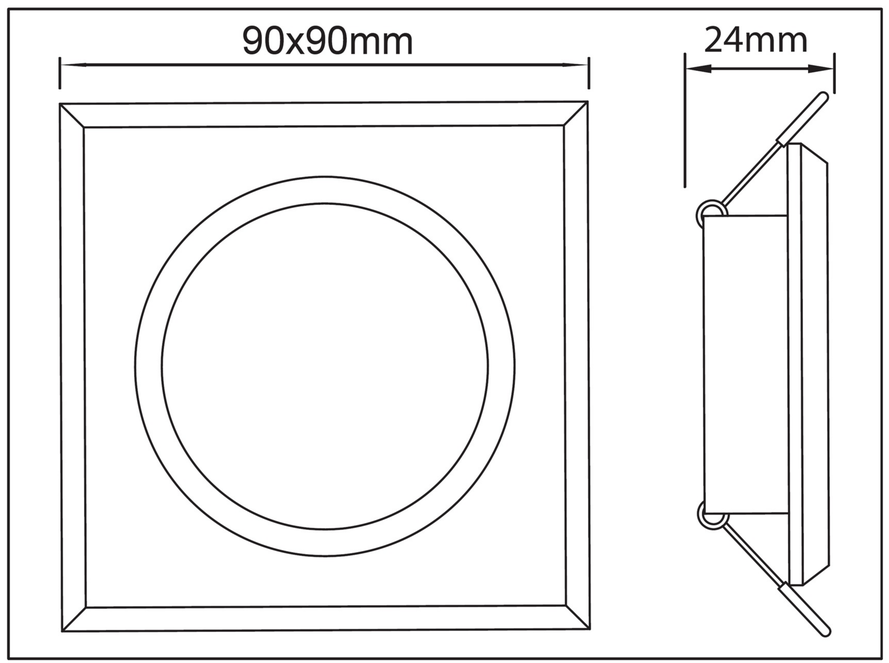

Frosted Glass effect Downlight

Trango GmbH
Jakobsberg 1
D-59929 Brilon
www.trango.de

TRANGO

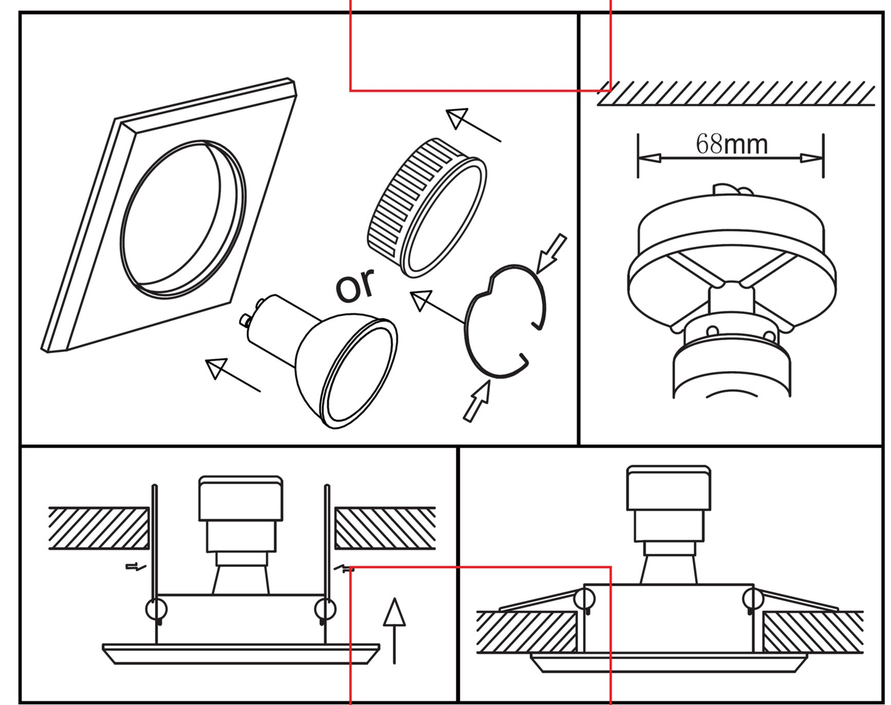

110x28x95mm