zuiver

Thank you for purchasing this Sideboard Raster Low. Please read the instructions carefully before use to ensure safe and satisfactory operation of this product.

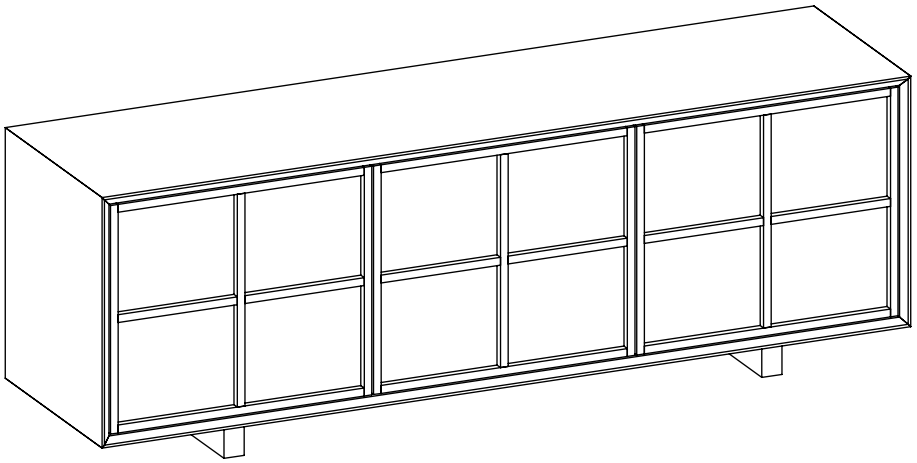

Pre-assembly preparation

Please ensure instructions are read in full before attempting to assemble this product.

People to assemble



Tools required



Please check the pack contents before attempting to assemble this product. A full checklist of components is given in this leaflet. If any components are missing, please contact the retailer from whom you bought this product.

This product is **HEAVY**, it should be assembled as near as possible to the point of use. **TAKE CARE WHEN LIFTING** to avoid personal injury and (or) damage to the product.

This product takes approximately **10 MINUTES** to assemble with **2 PEOPLE**.

The fittings pack contains **SMALL ITEMS** which should be **KEPT AWAY FROM YOUNG CHILDREN**.

Read this leaflet in full before commencing assembly.

PLEASE KEEP THESE INSTRUCTIONS FOR FUTURE REFERENCE

Fittings and parts checklist

Parts checklist		
1	Carcass x1	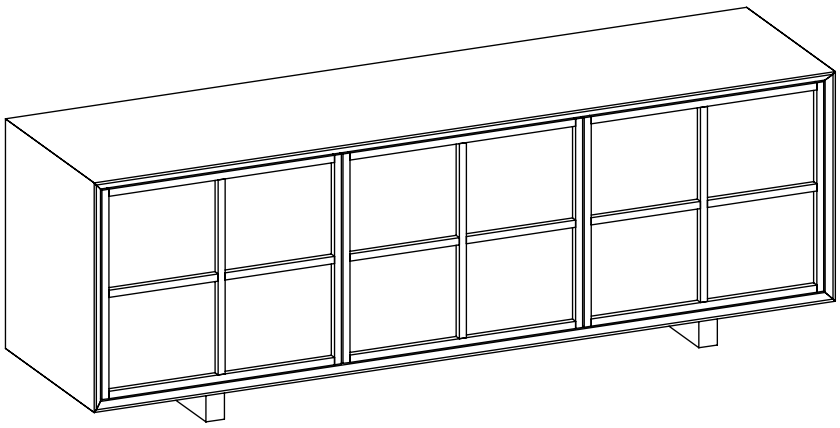
2	Side adjustable shelf x2	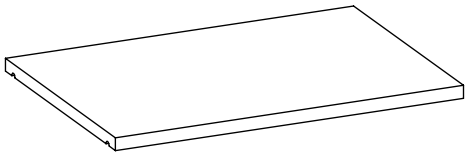
3	Centre adjustable shelf x1	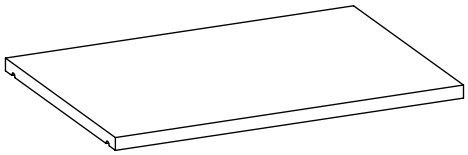

Fitting checklist		
A	Shelf support x12	

Wall fixing fittings

Store in separate fittings bag

B	Screw x2 Dia4x15mm	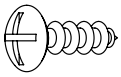	C	Wall bracket x4	
D	Cable tie x2	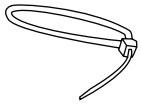			

Step by step assembly instructions

Step 1

With 2 people, carefully take out the carcass (part 1) and place in position.





CAUTION!

Please take care when lifting. Do not drag the unit when moving, must be lifted to prevent damaging the legs! Carefully turn the product so it is upright ensuring that the doors do not come loose.

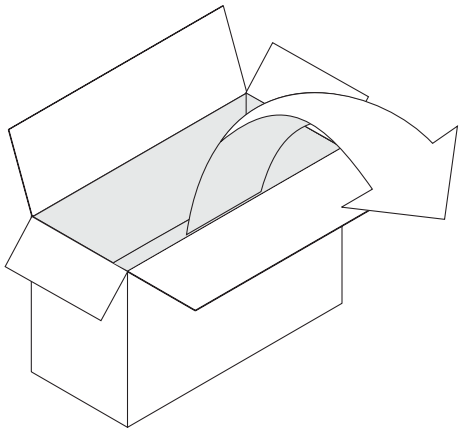

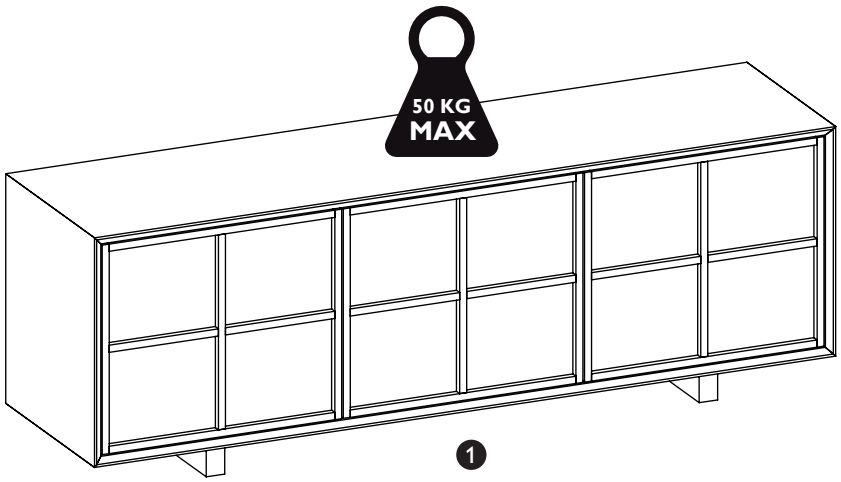

Step 2

Locate the shelf supports (part A) into the desired height. After, locate the shelves (part 2 and part 3) onto shelf supports as shown below.
Level the product using the adjustable feet.

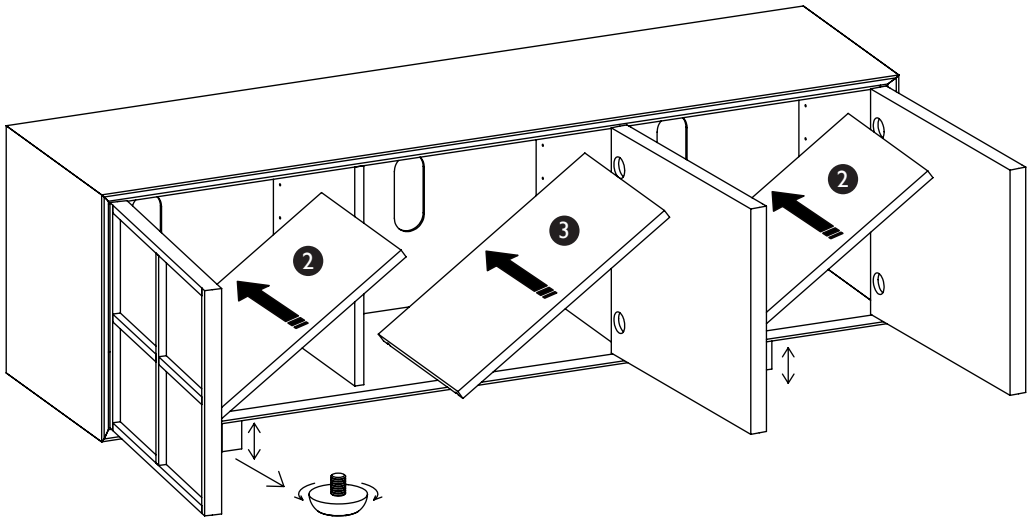

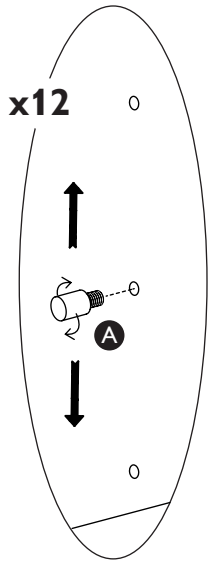

Step by step assembly instructions

Wall fixing - if in doubt seek professional advice

Please ensure to use the correct size rawl plug when installing the wall bracket to a wall. If your wall is cavity construction or wood you may need to seek appropriate wall fixings.

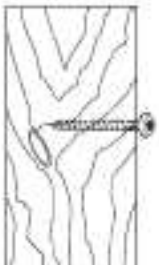

Wood
If fixing to wood make sure that it isn't chipboard as screws can easily pull away from the core structure.

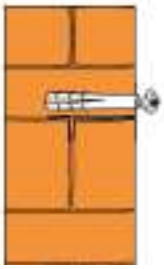

Brick or Masonry
Use an appropriate wall plug provided you are sure your wall is sound.

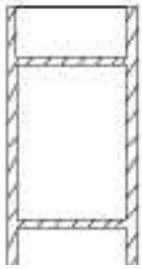

Cavity wall
Special toggle wall plugs are needed. Seek expert advice.

Step 3

With a screwdriver (not included), secure the wall bracket (2x part C) to the back of product using the screw (2x part B) into the pre-drilled pilot hole, as shown below.

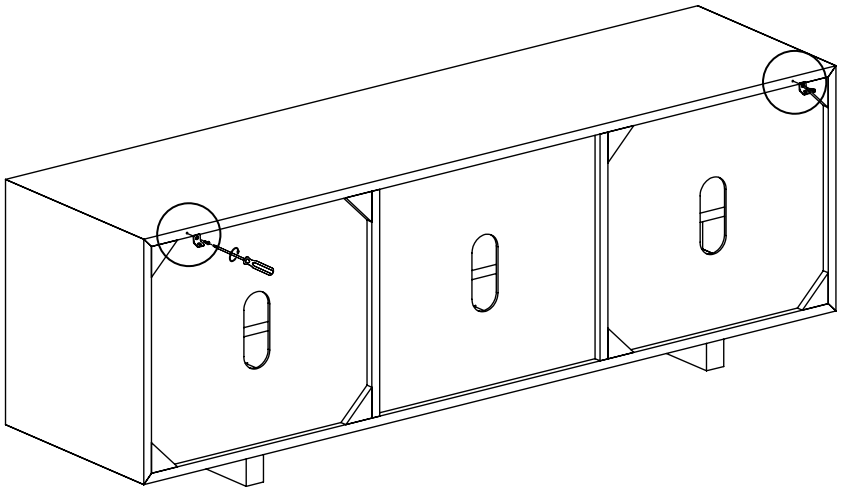

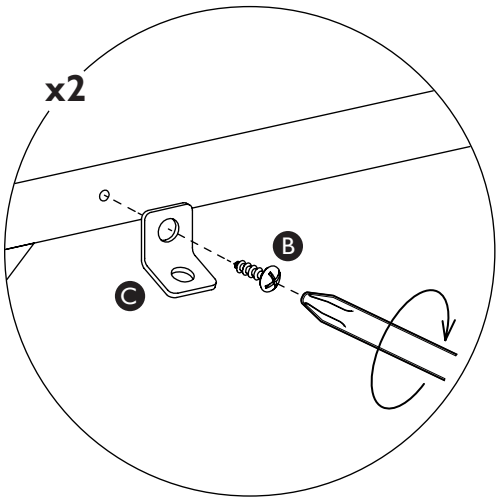

Step by step assembly instructions

Step 4

Before drilling, ensure the size of holes will be correct to fit the rawl plug (not included). Drill the hole according to the marked position and push the rawl plug (not included) into position, then with a screwdriver secure the wall bracket (2x part C) to the wall using screw (not included), as shown below.

Warning: Ensure the area to be drilled is free from hidden electrical wires, water and gas pipes.

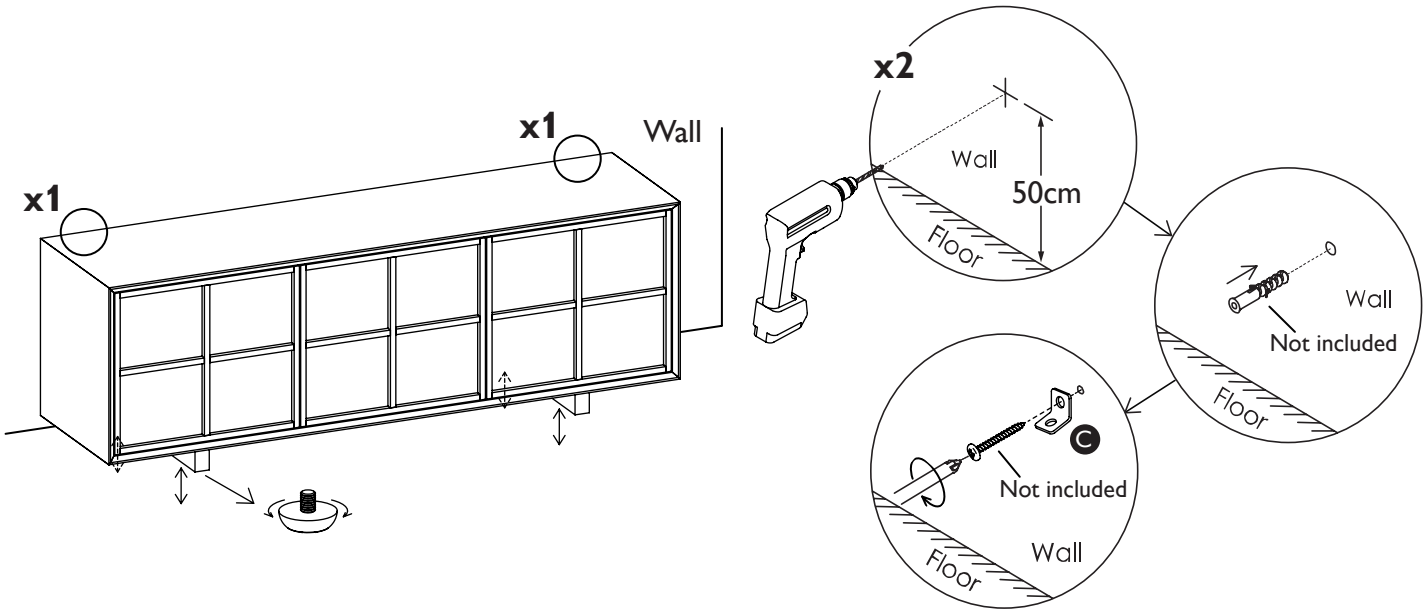

Step 5

Thread the cable tie (part D) through the two wall brackets (part C) as shown below. Move the product back towards the wall and into position. Never drag furniture when moving it, always lift it.
Tighten the cable tie (part D) to secure in place.

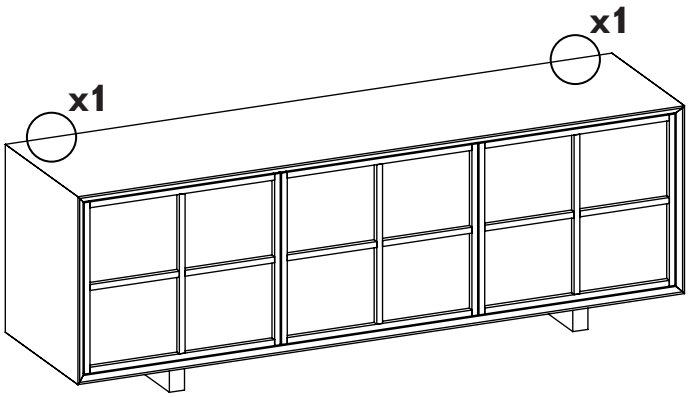

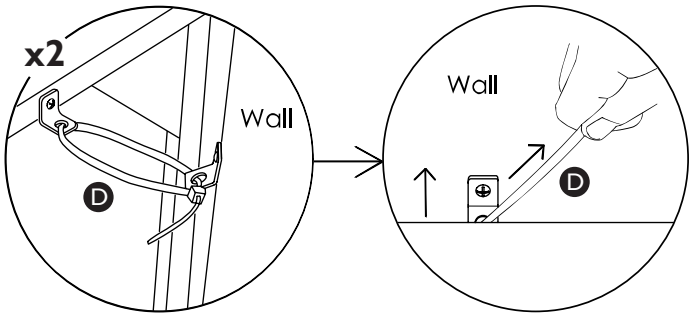

WARNING!
In order to prevent overturning, this product must be used with the wall attachment device provided.

Care and Maintenance

Wood furniture

- Wood displays different grain patterns depending on which way they cut - for example, the 'medullary rays' which can appear is a mark of good quality timber - these are just characteristics of the natural beauty of the wood. Some furniture is also deliberately aged and rustic.
- Wood veneers also allow distinctive patterns to be created on flat surfaces, such as table tops and drawer fronts by the way the slivers are arranged.
- All timber surfaces will change colour and mellow over time. New furniture will initially vary in shade from items that have been previously purchased.

How to care for your wood furniture

- Furniture with a hard lacquer, wax polish or painted surface should be dusted with a dry cloth.
- Spray polishes are best avoided as they contain silicones which may spoil the furniture's surface by building up over time.
- Make sure all surfaces are protected from heat and liquids by mats and coasters. Wipe up spills immediately and ensure that a mat or pad is placed under paper if you are writing.
- Our furniture will endure most temperatures in the home but it is best to avoid placing furniture next to heat sources such as radiators or fires. Be particularly careful with solid wood as the lack of humidity caused by central heating can cause damage such as warping.

Safety instructions

- Never drag furniture when moving it, always lift it.
- Do not sit or stand upon this product.
- Periodically check all fixings to ensure none have come loose and re-tighten where necessary.
- Please take care when handling or moving the furniture, careless handling may cause damage or injury.
- Furniture can be dangerous if incorrectly installed. Assembly should be carried out by a competent person. No liability will be accepted for damage or injury caused by incorrectly installed or assembled furniture.
- It is recommended that before moving heavy objects to a new location they are completely dis- assembled to avoid personal injury or damage to the furniture. Please be careful to retain all fittings when doing this.

PLEASE READ!

This veneered product top has a natural open grain finish. Please read the care guide thoroughly. We recommend using mats and wiping up spilled liquids immediately.
Avoid placing plant pots or vases with out waterproof mats to prolong the life of this product.

Experiencing problems with your new product?

Before calling customer service, please have your item's batch code ready.

You can find the batch code on the back or bottom of your product as below shown.
(**example batch code: 200510**)

