Distributed by Conrad Electronic SE • Klaus-Conrad-Str. 1 • D-92240 Hirschau

Datasheet

Item no. (See the table below)

V1_22052020_01_en

Fully Insulated Female Crimp Connectors

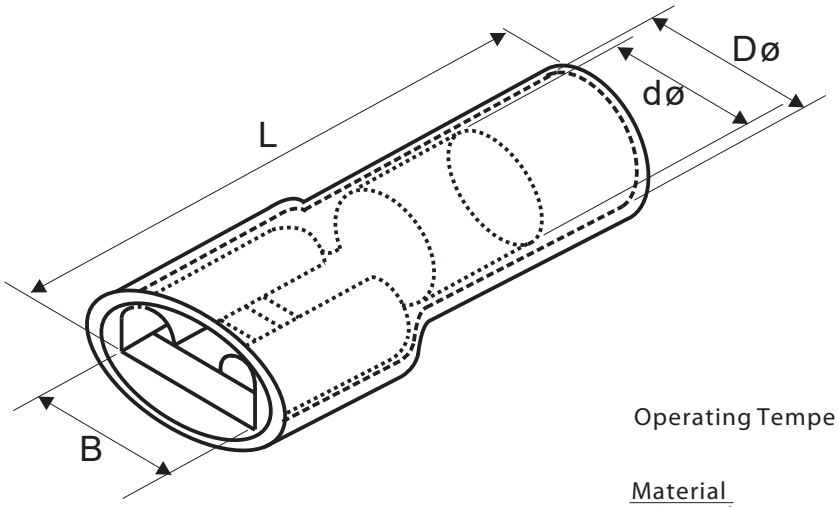

Operating Temperature : 75°C max.

Material

Terminal	: Copper
Insulation	: PVC
Plating	: TIN

Best.-Nr.	Typ	WIRE RANGE mm²/ AWG	Suitable connect TAB	DIMENSION B (mm) ±0.2	dø (mm) ±0.2	Dø (mm) ±0.3	L (mm) ±1.0	COLOR
1571412	FDFD1.25-110(5)	0.5~1.5mm² 22~16 AWG	2.8 x 0.5	3.2	1.7	3.5	18.4	RED
1566938	FDFD1.25-187(5)		4.8 x 0.5	5.0	1.7	3.5	20.0	
1565179	FDFD1.25-187(8)		4.8 x 0.8	5.0	1.7	3.5	20.0	
1565137	FDFD1.25-250		6.4 x 0.8	6.6	1.7	3.5	21.5	
1572192	FDFD2-110(5)	1.5~2.5mm² 16~14 AWG	2.8 x 0.5	3.2	2.3	4.0	19.0	BLUE
1565180	FDFD2-187(5)		4.8 x 0.5	5.0	2.3	4.0	20.0	
1566939	FDFD2-187(8)		4.8 x 0.8	5.0	2.3	4.0	20.0	
1566730	FDFD2-250		6.4 x 0.8	6.6	2.3	4.0	21.5	
1566940	FDFD5.5-187(5)	4~6mm² 12~10 AWG	4.8 x 0.5	5.0	3.4	6.2	23.0	YELLOW
1572129	FDFD5.5-250		6.4 x 0.8	6.6	3.4	6.2	25.5	

This is a publication by Conrad Electronic SE, Klaus-Conrad-Str. 1, D-92240 Hirschau (www.conrad.com).
All rights including translation reserved. Reproduction by any method, e.g. photocopy, microfilming, or the capture in electronic data processing systems require the prior written approval by the editor. Reprinting, also in part, is prohibited. This data represent the technical status at the time of printing. Changes in technology and equipment reserved.

© Copyright 2020 by Conrad Electronic SE.